DRAWING SYMBOLS

- PROPERTY LINE
- FURNITURE (NIC)
- EDGE OF OVERHEAD PLANES
- CENTER LINE
- FACE OF STUD DIMENSION UNO
- CENTER LINE DIMENSION UNO
- FH — FIRE HYDRANT
- A — NEW WINDOW
- A — DOOR
- 1 — NEW CONSTRUCTION NOTES
- A — DEMOLITION NOTES
- A, B, C, D, 1/A1 — INTERIOR ELEVATION
- 1/A1 — DETAIL CUT
- 1/A1 — PARTIAL BUILDING SECTION
- 1/A1 — BUILDING SECTION
- 1/A1 — EXTERIOR ELEVATION
- INSULATION
- HVAC SUPPLY
- HVAC RETURN
- EXISTING ELEVATION TO REMAIN
- EXISTING SPOT ELEVATION REFERENCE ONLY
- TC / FL — NEW SPOT ELEVATION
- P-2, P-1, T-1, T-2 — WALL FINISHES
- FLUORESCENT STRIP
- WALL MOUNTED LIGHT FIXTURE
- PENDANT MOUNTED LIGHT FIXTURE
- SURFACE MOUNTED LIGHT FIXTURE
- RECESSED LIGHT FIXTURE
- NL — NIGHT LIGHT
- EXIT SIGN
- GYP. BD. CEILING
- ACOUSTIC TILE CEILING
- RECESSED FLUORESCENT FIXTURE
- 2X4 STUDS PER SECTION
- 2X6 STUD WALL

ABBREVIATIONS

@	AT
AC	ASPHALTIC CONCRETE
AC UNIT	AIR CONDITIONING UNIT
ADJ	ADJUSTABLE
ALUM	ALUMINUM
ASTM	AMERICAN SOCIETY OF TESTING MATERIAL
BR	BEDROOM
BLK	BLOCK OR BLOCKING
BLDG	BUILDING
BM	BEAM
BN	BOUNDRY NAIL
BU ROOF	BUILT UP ROOF
CAB	CABINET
CB	COLUMN BASE
CC	COLUMN CAB
CFM	CUBIC FEET/MINUTE
CI	CAST IRON
CJ	CEILING JOIST OR CONTROL JOINT
CLG	CEILING
CL	CLOSET
CLR	CLEAR
C̲	CENTER LINE
CMU	CONCRETE MASONARY UNIT
CO	CLEAN OUT
CW	COLD WATER
COL	COLUMN
CONC	CONCRETE
CONTIN	CONTINUOUS
CT	CERAMIC TILE
CU FT	CUBIC FEET
CU IN	CUBIC INCH
CU YD	CUBIC YARD
D	DRYER
DG	DECOMPOSED GRANITE
DIA OR ∅	DIAMETER
DR	DINING ROOM
DN	DOWN
DS	DOWNSPOUT
DBL	DOUBLE
DRWG	DRAWING
EA	EACH
ELECT	ELECTRICAL
ELEV	ELEVATION
EN	EDGE NAIL
EQ	EQUAL
ETC	ET CETRA
EXT	EXTERIOR
EXIST'G OR (E)	EXISTING
FAU	FORCED AIR UNIT
FND	FOUNDATION
FIN FL	FINISH FLOOR
FIN	FINISH
FIN GR	FINISH GRADE
FJ	FLOOR JOIST
FL	FLOW LINE
FLR	FLOOR
FL HDR	FLUSH HEADER
FN	FIELD NAIL
FIX GL	FIXED GLASS
FOC	FACE OF CONCRETE
FOF	FACE OF FINISH
FOM	FACE OF MASONARY
FOS	FACE OF STUD
FTG	FOOTING
GA	GAUGE
GAR	GARAGE
GI	GALVANIZED IRON
GLU-LAM	GLUE LAMINATED BEAM
GL	GLASS
GFI	GROUND FAULT INTERCEPTOR
GR	GRADE
GYP BD	GYPSUM BOARD
HB	HOSE BIBB
HC	HANDICAPPED
HDR	HEADER
HDWD	HARDWOOD
HD	HOLD DOWN
HP	HEAT PUMP
HT	HEIGHT
HW	HOT WATER
HORIZ	HORIZONTAL
HR	HOUR
ICBO	INTERNATIONAL CONFERENCE OF BUILDING OFFICIALS
INSUL	INSULATION
INT	INTERIOR
JT	JOINT
JST	JOIST
KIT	KITCHEN
L	
LAM	LAMINATED
LS	LANDSCAPE
LAV	LAVATORY
LAUND	LAUNDRY
LB	POUND
	LINEN
LR	LIVING ROOM
LB	LAG BOLT
MFG	MANUFACTURER
MATL	MATERIAL
MB	MACHINE BOLT
MBR	MASTER BEDROOM
MC	MEDICINE CABINET
MAX	MAXIMUM
MECH	MECHANICAL
MO	MASONRY OPENING
MIN	MINIMUM
MTL	METAL
MTD	MOUNTED
NO OR #	NUMBER
NTS	NOT TO SCALE
NIC	NOT IN CONTRACT
OC	ON CENTER
P	PANTRY
PB	POST BASE
P̲L	PROPERTY LINE
PL	PLATE
PLAS LAM	PLASTIC LAMINATE
PLUMB'G	PLUMBING
PLYWD	PLYWOOD
PR	PAIR
PCC	PORTLAND CEMENT CONCRETE
PSI	POUND PER SQ INCH
PSF	POUND PER SQ FOOT
PTDF	PRESSURE TREATED DOUGLAS FIR
REQ'D	REQUIRED
R	RISER
RD	ROOF DRAIN
RDWD	REDWOOD
R/CJ	ROOF/CEILING JOIST
RJ	ROOF JOIST
RS	RESAWN
REF	REFRIGERATOR
REINF	REINFORCING
RO	ROUGH OPENING
RM	ROOM
SC	SOLID CORE
SD	SMOKE DETECTOR
SECT	SECTION
SF	SQUARE FOOT
SHT	SHEET
SHWR	SHOWER
SIMP WD	"SIMPSON" HOLD DOWN
SIM	SIMILAR
S&P	SHELF AND POLE
SPEC	SPECIFICATION
SQ	SQUARE
STL	STEEL
STD	STANDARD
STOR	STORAGE
S 4 S	SURFACE FOUR SIDES
T	TREAD
T & B	TOP & BOTTOM
TEMP	TEMPERED
T & G	TONGUE AND GROOVE
THRU	THROUGH
TI	TENANT IMPROVEMENTS
TC	TOP OF CURB
TOS	TOP OF SLAB
TOW	TOP OF WALL
TYP	TYPICAL
UBC	UNIFORM BUILDING CODE
UNO	UNLESS NOTED OTHERWISE
VGDF	VERTICAL GRAIN DOUGLAS FIR
VTR	VENT THROUGH ROOF
VTW	VENT THROUGH WALL
VERT	VERTICAL
W	WASHER
WAINS	WAINSCOT
WD	WOOD
WC	WATER CLOSET
WF	WIDE FLANGE
WH	WATER HEATER
WP	WATER PROOF
W/	WITH

CODE REFERENCES

THIS PROJECT SHALL COMPLY WITH THE 2022 CALIFORNIA BUILDING CODE, WHICH ADOPTS THE 2021 IBC, 2021 UMC, 2021 UPC AND THE 2017 NEC.

ALL WORK AND MATERIALS SHALL BE IN FULL ACCORDANCE WITH THE REQUIREMENTS OF THESE CODES AND ALL APPLICABLE LOCAL ORDINANCES. THE GOVERNING CODES ARE:

- 2022 CALIFORNIA BUILDING CODE WHICH ADOPTS THE 2021 INTERNATIONAL BUILDING CODE
- 2022 CALIFORNIA MECHANICAL CODE WHICH ADOPTS THE 2021 UNIFORM MECHANICAL CODE
- 2022 CALIFORNIA PLUMBING CODE WHICH ADOPTS THE 2021 UNIFORM PLUMBING CODE
- 2022 CALIFORNIA ELECTRICAL CODE WHICH ADOPTS THE 2017 NATIONAL ELECTRICAL CODE
- 2022 CALIFORNIA ENERGY CODE, AS ADOPTED AND AMENDED BY THE STATE OF CALIFORNIA
- 2022 CALIFORNIA GREEN BUILDING STANDARDS CODE
- 2022 CALIFORNIA FIRE CODE WHICH ADOPTS 2021 IFC
- 2022 CALIFORNIA RESIDENTIAL CODE
- NFPA 13, STANDARD FOR INSTALLATION OF SPRINKLER SYSTEMS AS AMENDED, 2018 EDITION
- NFPA 14, STANDARD FOR THE INSTALLATION OF STANDPIPE AND HOSE SYSTEMS, 2018 EDITION
- NFPA 24, STANDARD FOR THE INSTALLATION OF PRIVATE FIRE SERVICE MAINS AND THEIR APPURTENANCES.

BUILDING INFORMATION

SITE ADDRESS:
222 W. MADISON AVE.
EL CAJON, CA 92020

APN:
482-301-09-00

SCOPE OF WORK:
TENANT IMPROVEMENT ON EXISTING 4,549 SF BUILDING AT EXISTING 0.45 ACRE PARCEL FOR DERMATOLOGISTS OFFICE. ALL PATIENTS ARE TO BE AMBULATORY WITH NO LONG TERM CARE.

EXISTING/ PROPOSED USE:
OFFICE

EXISTING/ PROPOSED OCCUPANCY TYPE:
B

SPRINKLER SYSTEM:
EXISTING: NONE
PROPOSED: NO CHANGE

ZONE:
O-P (OFFICE PROFESSIONAL)

STORIES:
1

CONSTRUCTION TYPE:
--

TOTAL BUILDING AREA:
4,549 SF

LOT COVERAGE:

LOT AREA:	19,388 SF / 0.45 ACRES
EXISTING BUILDING AREA:	4,536 SF
PROPOSED BUILING AREA:	4,549 SF
TOTAL BUILDING COVERAGE:	4,549 SF
LOT COVERAGE PERCENTAGE:	23%

LEGAL DESCRIPTION:
PM01939 PAR 1

DEFERRED SUBMITTALS

- FIRE ALARM

SUBMITTAL DOCUMENTS FOR DEFERRED SUBMITTAL ITEMS SHALL BE SUBMITTED TO THE REGISTERED DESIGN PROFESSIONAL IN RESPONSIBLE CHARGE, WHO SHALL REVIEW THEM AND FORWARD THEM TO THE BUILDING OFFICIAL WITH A NOTATION INDICATING THAT THE DEFERRED SUBMITTAL DOCUMENTS HAVE BEEN REVIEWED AND THAT THEY HAVE BEEN FOUND TO BE IN GENERAL CONFORMANCE WITH THE DESIGN OF THE BUILDING. THE DEFERRED SUBMITTAL ITEMS SHALL NOT BE INSTALLED UNTIL THEIR DESIGN AND SUBMITTAL DOCUMENTS HAVE BEEN APPROVED BY THE BUILDING OFFICIAL.

DESIGN INFORMATION

OWNER:
SAN DIEGO FAMILY DERMATOLOGY
655 EUCLID AVE., SUITE 304
NATIONAL CITY, CA 91950
CONTACT: BROOKE RESH SATEESH, M.D.
(619) 267-8303
BRS@SDFAMILYDERM.COM

ARCHITECT:
NOAA GROUP
4990 N. HARBOR DR., SUITE 201
SAN DIEGO, CA 92106
CONTACT: JOE HOLASEK
(619) 507-1001
JCH@NOAAINC.COM

STRUCTURAL ENGINEER:
PAUL CHRISTENSON SAN DIEGO ENGINEERING
3529 COASTVIEW CT.
CARLSBAD, CA 92010
CONTACT: PAUL CHRISTENSON
(760) 207-1885
PAUL.PCSD@GMAIL.COM

ELECTRICAL ENGINEER:
RB CONSULTING ENGINEERS INC.
1044 PIONEER WAY, SUITE E
EL CAJON, CA 92020
CONTACT: KEN BERTALAN
(619) 599-6973
KBERTALAN@RBCENGINEERS.COM

MECHANICAL / PLUMBING ENGINEER:
ENGINEERED SOLUTIONS
CONTACT: CRAIG MOYA
(619) 825-7516
ENGSYSMAIL@GMAIL.COM

VICINITY MAP

N.T.S.

SHEET INDEX

ARCHITECTURAL	
A-001	COVER SHEET
A-011	GENERAL NOTES
A-012	GENERAL NOTES
A-013	ADA NOTES
A-014	ADA NOTES
A-015	ADA NOTES
A-016	ADA NOTES
A-021	NON-RES CALGREEN
A-022	NON-RES CALGREEN
A-023	NON-RES CALGREEN
A-101	EXISTING/DEMO SITE PLAN
A-102	PROPOSED SITE PLAN
A-111	EXISTING/DEMO FLOOR PLAN
A-112	PROPOSED FLOOR PLAN
A-113	EXISTING/DEMO REFLECTED CEILING PLAN
A-114	PROPOSED REFLECTED CEILING PLAN
A-115	EXISTING/DEMO ROOF PLAN
A-116	PROPOSED ROOF PLAN
A-201	EXISTING ELEVATIONS
A-202	PROPOSED ELEVATIONS
A-301	INTERIOR ELEVATIONS
A-302	INTERIOR ELEVATIONS & RESTROOM NOTES
A-401	BUILDING SECTION & DOOR SCHEDULE
A-601	DETAILS
STRUCTURAL	
S-1	FOUNDATION PLAN
S-2	FRAMING PLAN
SD-1	STRUCTURAL DETAILS
SN-1	STRUCTURAL NOTES
MECHANICAL	
M-100	MECHANICAL ROOF PLAN & SCHEDULES
M-101	MECHANICAL PLAN
TITLE 24	
EN-101	ENERGY CODE FORMS
EN-102	ENERGY CODE FORMS
EN-103	ENERGY CODE FORMS
PLUMBING	
P-100	PLUMBING FIXTURE SCHEDULE
P-101	PLUMBING PLAN
ELECTRICAL	
E001	COVER SHEET
E002	LIGHTING FIXTURE SCHEDULE
E003	TITLE 24 FORMS
E101	DEMOLITION PLAN
E201	LIGHTING PLAN
E301	POWER PLAN
E302	ROOF PLAN
E501	EMERGENCY EGRESS PLAN
E701	LIGHTING CONTROL DETAILS
E801	SINGLE LINE DIAGRAM

NOAA group architects
4990 N Harbor Drive, Ste 201
San Diego, CA 92106

tel: 619-297-8066
web: www.noaainc.com

LICENSED ARCHITECT
DANUBE TALANT
No. C38946
REN 11/30/2023
STATE OF CALIFORNIA

DO NOT SCALE DRAWINGS.
ANY DISCREPANCIES TO BE REVIEWED WITH THE ARCHITECT.

SAN DIEGO FAMILY DERMATOLOGY
222 W. MADISON AVENUE
EL CAJON, CA 92020

REVISION SCHEDULE

Nº	DATE	ISSUE
1	07/06/2023	1ST CITY REVIEW
2	08/22/2023	2ND CITY REVIEW

Project No:	BP-2023-0267
Project Start Date:	Issue Date
Drawn:	Designer
Checked:	Checker
Revision:	

Sheet Name:

COVER SHEET

Scale:	12" = 1'-0"

Sheet No:

A-001

8/25/2023 10:51:07 AM

DIVISION 1 GENERAL REQUIREMENTS

1.1 GENERAL CONDITIONS
A. ALL WORK UNDER THIS CONTRACT TO BE IN ACCORDANCE WITH THE GENERAL CONDITIONS OF THE CONTRACT FOR CONSTRUCTION AIA DOCUMENT A201, 2007 ADDITION OR OTHER APPROVED FORMAT.
B. WHERE ANY ARTICLE, PARAGRAPH, SUBPARAGRAPH, OR CLAUSE OF THE GENERAL CONDITIONS IS MODIFIED OR DELETED BY THESE SUPPLEMENTS, THE UNALTERED PROVISIONS OF THAT ARTICLE, PARAGRAPH, SUBPARAGRAPH OR CLAUSE SHALL REMAIN IN EFFECT.
C. COORDINATE ALLOWABLE CONSTRUCTION HOURS WITH LANDLORD.
D. A LETTER FROM THE CONTRACTOR AND OR BUILDING OWNER CERTIFYING WHAT MATERIAL HAS BEEN USED AND ITS COMPLIANCE WITH THE CODE MUST BE SUBMITTED TO THE BUILDING INSPECTOR.
E. APPLICABLE CODES: ALL WORK SHALL BE IN CONFORMANCE WITH ALL FEDERAL, STATE, AND LOCAL CODES. SPECIFICATIONS AND STANDARDS SHALL MEAN AND ARE INTENDED TO BE THE LATEST EDITION, AMENDMENT OR REVISION OF SUCH REFERENCE STANDARD IN EFFECT AS OF THE DATE OF THE CONTRACT DOCUMENTS.

1.2 INTERPRETATION
A. VIEWED OR APPROVED BY ARCHITECTURE/ ENGINEER SHALL MEAN WRITTEN REVIEW OR APPROVAL BY ARCHITECT/ENGINEER OR AN AUTHORIZED CONSULTANT.
B. REFERENCE IN THE SPECIFICATIONS TO A SINGLE ITEM OR PIECE OF EQUIPMENT SHALL APPLY TO AS MANY SUCH ITEMS AS ARE INDICATED ON DRAWINGS OR REQUIRED TO COMPLETE THE PROJECTS.
C. INDICATING AN ITEM OR METHOD ON THE DRAWINGS REQUIRES THE CONTRACTOR TO FURNISH, FABRICATE, AND INSTALL THE ITEM, UNLESS INDICATED OTHERWISE.

1.3 FEES
A. UNLESS OTHERWISE INDICATED IN THE CONTRACT DOCUMENTS, THE OWNER SHALL PAY FOR PLAN CHECK FEES AND BUILDING PERMIT FEES, INCLUDING SEWER, GAS AND WATER CONNECTION FEES, AS WELL AS OTHER ASSESSMENTS OR FEES ESTABLISHED BY THE AUTHORITY HAVING JURISDICTION. THE CONTRACTOR SHALL PAY FOR ALL OTHER PERMITS, FEES, LICENSES AND INSPECTIONS NECESSARY FOR PROPER EXECUTION AND COMPLETION OF WORK, INCLUDING PLUMBING, MECHANICAL AND ELECTRICAL PERMIT FEES.

1.4 SUBSTITUTIONS
A. SUBSTITUTION REQUESTS: SUBMIT THREE COPIES OF EACH REQUEST FOR CONSIDERATION . IDENTIFY PRODUCT OR FABRICATION OR INSTALLATION METHOD TO BE REPLACED. INCLUDE SPECIFICATION SECTION NUMBER AND TITLE AND DRAWING NUMBERS AND TITLES.
B. SUBSTITUTIONS FOR CAUSE: SUBMIT REQUESTS FOR SUBSTITUTION IMMEDIATELY UPON DISCOVERY OF NEED FOR CHANGE, BUT NOT LATER THEN 15 DAYS PRIOR TO TIME REQUIRED FOR PREPARATION AND REVIEW OF RELATED SUBMITTALS.
C. SUBSTITUTIONS FOR CONVENIENCE: ARCHITECT WILL CONSIDER REQUESTS FOR SUBSTITUTION IF RECEIVED WITHIN 60 DAYS AFTER THE NOTICE OF AWARD.

1.5 SUBMITTALS
A. SHOP DRAWINGS: PREPARE PROJECT-SPECIFIC INFORMATION, DRAWN ACCURATELY TO SCALE. DO NOT BASE SHOP DRAWINGS ON REPRODUCTIONS OF THE CONTRACT DOCUMENTS OR STANDARD PRINTED DATA, UNLESS SUBMITTAL BASED UPON ARCHITECTS DIGITAL DATA DRAWING FILES IS OTHERWISE PERMITTED.
B. SAMPLES: SUBMIT SAMPLES FOR REVIEW OF KIND, COLOR, PATTERN AND TEXTURE FOR A CHECK OF THESE CHARACTERISTICS WITH OTHER ELEMENTS AND FOR A COMPARISON OF THESE CHARACTERISTICS BETWEEN SUBMITTAL AND ACTUAL COMPONENT AS DELIVERED AND INSTALLED.
C. PRODUCT DATA: COLLECT INFORMATION INTO A SINGLE SUBMITTAL FOR EACH ELEMENT OF CONSTRUCTION AND TYPE OF PRODUCT OR EQUIPMENT.

1.6 DELEGATED-DESIGN SERVICES (DESIGN BUILD)
A. PERFORMANCE AND DESIGN CRITERIA: WHERE PROFESSIONAL DESIGN SERVICES OR CERTIFICATIONS BY A DESIGN PROFESSIONAL ARE SPECIFICALLY REQUIRED OF CONTRACTOR BY THE CONTRACT DOCUMENTS, PROVIDE PRODUCTS AND SYSTEMS COMPLYING WITH SPECIFIC PERFORMANCE AND DESIGN CRITERIA INDICATED.
B. DELEGATED-DESIGN SERVICES CERTIFICATION: IN ADDITION TO SHOP DRAWINGS, PRODUCT DATA, AND OTHER REQUIRED SUBMITTALS, SUBMIT DIGITALLY - SIGNED PDF ELECTRONIC FILE AND THREE PAPER COPIES FOR EACH PRODUCT AND SYSTEM SPECIFICALLY ASSIGNED TO CONTRACTOR TO BE DESIGNED OR CERTIFIED BY A DESIGN PROFESSIONAL.
C. INDICATE THAT PRODUCTS AND SYSTEMS COMPLY WITH PERFORMANCE AND DESIGN CRITERIA IN THE CONTRACT DOCUMENTS. INCLUDE LIST OF CODES, LOADS AND OTHER FACTORS USED IN PERFORMING THESE SERVICES.

1.7 EXECUTION REQUIREMENTS
A. CUTTING AND PATCHING: COMPLY WITH REQUIREMENTS FOR AND LIMITATIONS ON CUTTING AND PATCHING OF CONSTRUCTION ELEMENTS.
  a. STRUCTURAL ELEMENTS: WHEN CUTTING AND PATCHING STRUCTURAL ELEMENTS NOTIFY ARCHITECT OF LOCATIONS AND DETAILS OF CUTTING AND AWAIT DIRECTIONS FROM THE ARCHITECT BEFORE PROCEEDING. SHORE, BRACE, AND SUPPORT STRUCTURAL ELEMENT DURING CUTTING AND PATCHING. DO NOT CUT AND PATCH STRUCTURAL ELEMENTS IN A MANNER THAT COULD CHANGE THEIR LOAD-CARRYING CAPACITY OR INCREASE DEFLECTION.
  b. OPERATIONAL ELEMENTS: DO NOT CUT AND PATCH OPERATING ELEMENTS AND RELATED COMPONENTS IN A MANNER THAT RESULTS IN REDUCING THEIR CAPACITY TO PERFORM AS INTENDED OR THAT RESULTS IN INCREASED MAINTENANCE OR DECREASED OPERATIONAL LIFE OR SAFETY.
  c. OTHER CONSTRUCTION ELEMENTS:DO NOT CUT AND PATCH OTHER CONSTRUCTION ELEMENTS OR COMPONENTS IN A MANNER THAT COULD CHANGE THEIR LOAD-CARRYING CAPACITY. THAT RESULTS IN REDUCING THEIR CAPACITY TO PERFORM AS INTENDED OR THAT RESULTS IN INCREASED MAINTENANCE OR DECREASED OPERATIONAL LIFE OR SAFETY.
  d. VISUAL ELEMENTS: DO NOT CUT AND PATCH CONSTRUCTION IN A MANNER THAT RESULTS IN VISUAL EVIDENCE OF CUTTING AND PATCHING. DO NOT CUT AND PATCH EXPOSED CONSTRUCTION IN A MANNER THAT WOULD, IN THE ARCHITECTS OPINION, REDUCE THE BUILDINGS AESTHETIC QUALITIES. REMOVE AND REPLACE CONSTRUCTION THAT HAS BEEN CUT AND PATCHED IN A VISUALLY UNSATISFACTORY MANNER.
B. EXISTING CONDITIONS: THE EXISTENCE AND LOCATION OF UNDERGROUND AND OTHER UTILITIES AND CONSTRUCTION INDICATED AS EXISTING ARE NOT GUARANTEED. BEFORE BEGINNING SITEWORK, INVESTIGATE AND VERIFY THE EXISTENCE AND LOCATION OF UNDERGROUND UTILITIES, MECHANICAL AND ELECTRICAL SYSTEMS AND OTHER CONSTRUCTION AFFECTING THE WORK.
C. BEFORE CONSTRUCTION, VERIFY THE LOCATION AND INVERT ELEVATION AT POINTS OF CONNECTION OF SANITARY SEWER, STORM SEWER, AND WATER SERVICE PIPING, UNDERGROUND ELECTRICAL SERVICES, AND OTHER UTILITIES.
D. A LETTER FROM THE CONTRACTOR AND OR THE BUILDING OWNER CERTIFYING WHAT MATERIAL HAS BEEN USED AND IT'S COMPLIANCE WITH THE CODE MUST BE SUBMITTED TO THE BUILDING INSPECTOR.
E. BUILDING LINES AND LEVELS: LOCATE AND LAY OUT CONTROL LINES AND LEVELS FOR STRUCTURES BUILDING FOUNDATIONS, COLUMN GRIDS, AND FLOOR LEVELS, INCLUDING THOSE REQUIRED FOR MECHANICAL AND ELECTRICAL WORK. TRANSFER SURVEY MARKINGS AND ELEVATIONS FOR USE WITH CONTROL LINES AND LEVELS. LEVEL FOUNDATIONS AND PIERS FROM TWO OR MORE LOCATIONS.
F. TEMPORARY SUPPORT: PROVIDE TEMPORARY SUPPORT OF WORK TO BE CUT.
G. PROTECTION: PROTECT IN-PLACE CONSTRUCTION DURING CUTTING AND PATCHING TO PREVENT DAMAGE. PROVIDE PROTECTION FROM ADVERSE WEATHER CONDITIONS FOR PORTIONS OF PROJECT THAT MIGHT BE EXPOSED DURING CUTTING AND PATCHING OPERATIONS.
H. ADJACENT OCCUPIED AREAS: AVOID INTERFERENCE WITH USE OF ADJOINING AREAS OR INTERRUPTION OF FREE PASSAGE ADJOINING AREAS.
I. EXISTING UTILITY SERVICES AND MECHANICAL /ELECTRICAL SYSTEMS: WHERE EXISTING SERVICES/SYSTEMS ARE REQUIRED TO BE REMOVED, RELOCATED, OR ABANDONED, BYPASS SUCH SERVICES/SYSTEMS BEFORE CUTTING TO MINIMIZE INTERRUPTION TO OCCUPIED AREAS.
J. CUTTING: CUT IN-PLACE CONSTRUCTION BY SAWING, DRILLING, BREAKING, TRIPPING, GRINDING, AND SIMILAR OPERATIONS, INCLUDING EXCAVATION, USING METHODS LEAST LIKELY TO DAMAGE ELEMENTS RETAINED OR ADJOINING CONSTRUCTION. IF POSSIBLE, REVIEW PROPOSED PROCEDURES WITH ORIGINAL INSTALLER; COMPLY WITH ORIGINAL INSTALLER'S WRITTEN RECOMMENDATIONS.
K. PATCHING: PATCH CONSTRUCTION BY FILLING, REPAIRING, REFINISHING, CLOSING UP AND SIMILAR OPERATIONS FOLLOWING PERFORMANCE OF OTHER WORK. PATCH WITH DURABLE SEAMS THAT ARE AS INVISIBLE AS PRACTICABLE. PROVIDE MATERIALS AND COMPLY WITH INSTALLATION REQUIREMENTS SPECIFIED IN OTHER SECTIONS, WHERE APPLICABLE.
L. CLEANING: CLEAN PROJECT SITE AND WORK AREAS DAILY, INCLUDING COMMON AREAS. ENFORCE REQUIREMENTS STRICTLY. DISPOSE OF MATERIALS LAWFULLY.
M. PROVIDE FINAL PROTECTION AND MAINTAIN CONDITIONS THAT ENSURE INSTALLED WORK IS WITHOUT DAMAGE OR DETERIORATION AT TIME OF SUBSTANTIAL COMPLETION.

DIVISION 2 EXISTING CONDITIONS

2.1 SELECTIVE DEMOLITION
A. GENERAL: DEMOLISH AND REMOVE EXISTING CONSTRUCTION ONLY TO THE EXTENT REQUIRED BY NEW CONSTRUCTION AND AS INDICATED. USE METHODS REQUIRED TO COMPLETE THE WORK WITHIN LIMITATIONS OF GOVERNING REGULATIONS AND AS FOLLOWS.
  a. NEATLY CUT OPENINGS AND HOLES PLUMB, SQUARE, AND AND TRUE TO DIMENSIONS REQUIRED. USE CUTTING METHODS LEAST LIKELY TO DAMAGE CONSTRUCTION TO REMAIN OR ADJOINING CONSTRUCTION . USE HAND TOOLS OR SMALL POWER TOOLS DESIGNED FOR SAWING OR GRINDING, NOT HAMMERING OR CHOPPING, TO MINIMIZE DISTURBANCE OF ADJACENT SURFACES. TEMPORARILY COVER OPENINGS TO REMAIN.
  b. CUT OR DRILL FROM THE EXPOSED OR FINISHED SIDE INTO CONCEALED SURFACES TO AVOID MARRING EXISTING FINISHED SURFACES
  c. DO NOT USE CUTTING TORCHES UNTIL WORK AREA IS CLEARED OF FLAMMABLE MATERIALS. AT CONCEALED SPACES, SUCH AS DUCT AND PIPE INTERIORS, VERIFY CONDITION AND CONTENTS OF HIDDEN SPACE BEFORE STARTING FLAME-CUTTING OPERATIONS.
  d. LOCATED SELECTIVE DEMOLITION EQUIPMENT AND REMOVE DEBRIS AND MATERIALS SO AS NOT TO IMPOSE EXCESSIVE LOADS ON SUPPORTING WALLS, FLOORS AND FRAMING.
  e. DISPOSE OF DEMOLISHED ITEMS AND MATERIALS PROMPTLY
B. REUSE OF BUILDING ELEMENTS:PROJECT HAS BEEN DESIGNED TO RESULT IN END-OF-PROJECT RATES FOR REUSE OF BUILDING ELEMENTS AS FOLLOWS. DO NOT DEMOLISH BUILDING ELEMENTS BEYOND WHAT IS INDICATED ON DRAWINGS WITHOUT ARCHITECTS APPROVAL.
C. REMOVED AND SALVAGED ITEMS:
  a. CLEAN SALVAGED ITEMS:PACK OR CRATE ITEMS AFTER CLEANING. IDENTIFY CONTENTS OF CONTAINERS.
  b. STORE ITEMS IN A SECURE AREA UNTIL DELIVERY TO OWNER
  c. PROTECT ITEMS FROM DAMAGE DURING TRANSPORT AND STORAGE
D. REMOVED AND REINSTALLED ITEMS: CLEAN AND REPAIR ITEMS TO FUNCTIONAL CONDITION ADEQUATE FOR INTENDED REUSE. PAINT EQUIPMENT TO MATCH NEW EQUIPMENT.
  a. PACK OR CRATE ITEMS AFTER CLEANING AND REPAIRING. IDENTIFY CONTENTS OF CONTAINERS.
  b. PROTECT ITEMS FROM DAMAGE DURING TRANSPORT AND STORAGE.
  c. REINSTALL ITEMS IN LOCATIONS INDICATED . COMPLY WITH INSTALLATION REQUIREMENTS FOR NEW MATERIALS AND EQUIPMENT. PROVIDE CONNECTIONS, SUPPORT, AND MISCELLANEOUS MATERIALS NECESSARY TO MAKE ITEM FUNCTIONAL FOR USE INDICATED.
E. EXISTING ITEMS TO REMAIN: PROTECT CONSTRUCTION INDICATED TO REMAIN AGAINST DAMAGE AND SOILING DURING SELECTIVE DEMOLITION. WHEN PERMITTED BY ARCHITECT. ITEMS MAY BE REMOVED TO A SUITABLE, PROTECTED STORAGE LOCATION DURING SELECTIVE DEMOLITION CLEANED AND REINSTALLED IN THEIR ORIGINAL LOCATIONS AFTER SELECTIVE DEMOLITION OPERATIONS ARE COMPLETE.

DIVISION 5 METALS

5.2 COLD FORM STEEL FRAMING
A. ALL COLD-FORMED STEEL FRAMING SHALL BE FABRICATED AND ERECTED IN ACCORDANCE WITH MANUFACTURER'S RECOMMENDATIONS AND IN ACCORDANCE WITH THE LATEST EDITION OF SPECIFICATIONS FOR THE DESIGN OF OLD-FORMED STEEL STRUCTURAL MEMBERS BY THE AMERICAN IRON AND STEEL INSTITUTE
B. STEEL FOR ALL 14 AND 16 GAGE STUDS AND JOISTS, AND FOR ALL 18 AND 20 GAGE STUDS YIELD STRENGTH OF 30,000 PSI. STEEL SHALL BE GALVANIZED AT LOCATIONS EXPOSED TO WEATHER AND WHENEVER NOTED ON THE DRAWINGS.
C. ALL STUDS SHALL BE SECURELY SEATED FOR FULL END BEARING ON TOP AND BOTTOM TRACK. UNLESS NOTED OTHERWISE, PROVIDE DOUBLE STUDS AT ALL JAMBS, CORNERS AND INTERSECTIONS, BEAM BEARINGS AND JOIST BEARINGS.
D. BRIDGING SHALL BE INSTALLED PER MANUFACTURERS RECOMMENDATIONS WITH THE FOLLOWING MINIMUM REQUIREMENTS: 1.FOR NON-BERING WALLS, PROVIDE BRIDGING AT MID -HEIGHT FOR WALLS LESS THAN OR EQUAL TO 10'-0" HIGH, AND 5'-0" O.C. MAXIMUM FOR WALLS GREATER THAN 10'-0" HIGH
E. STEEL STUD WALLS:STEEL STUD WALLS SHALL BE 18 GAGE @ 16" O.C. UNLESS NOTED OTHERWISE ON PLANS. TRACK ANCHOR BOLTS SHALL BE 1/2" DIAMETER PLACED NOT TO EXCEED 4'-0" O.C UNLESS NOTED OTHERWISE. ANCHOR BOLTS SHALL BE PLACED AT ALL JAMBS, CORNERS INTERSECTIONS AND WALL ENDS. ALL BOTTOM TRACKS SHALL HAVE A MINIMUM OF 2 ANCHOR BOLTS.
F. ALL WELDING SHALL BE PERFORMED BY WELDERS EXPERIENCED IN LIGHT GAGE STEEL FRAMING WORK.
G. ALL ARCHITECTURAL EXPOSED CONNECTIONS COLOR TO MATCH DEVELOPMENT STANDARD.

5.3 METAL FABRICATIONS
A. DELEGATED DESIGN: FENCING
B. SHOP DRAWINGS: SHOW FABRICATION AND INSTALLATION DETAILS FOR METAL FABRICATIONS
C. FERROUS METALS:
  a. STEEL PLATES, SHAPES, AND BARS: ASTM A 36/A 36M.
  b. STEEL TUBING:ASTM A 500, COLD-FORMED STEEL TUBING.
D. FABRICATION:
  a. SHOP ASSEMBLY: PREASSEMBLE ITEMS IN THE SHOP TO GREATEST EXTENT POSSIBLE. USE CONNECTIONS THAT MAINTAIN STRUCTURAL VALUE OF THE JOINED PIECES.
  b. CUT, DRILL, AND PUNCH METALS CLEANLY AND ACCURATELY. REMOVE BURRS AND EASE EDGES. REMOVE SHARP OR ROUGH AREAS ON EXPOSED SURFACES.
  c. FORM EXPOSED CONNECTIONS WITH HAIRLINE JOINTS FLUSH AND SMOOTH, USING CONCEALED FASTENERS OR WELDS WHERE POSSIBLE. LOCATE JOINTS WHERE LEAST CONSPICUOUS.
  d. ALL STEEL TO BE HOT DIPPED GALVANIZED OR POWDER COATED AFTER FABRICATION TO THE GREATEST EXTENT POSSIBLE.
  e. ALL STEEL FABRICATIONS SHALL BE SHOP-PAINTED WITH PRIMER COMPATIBLE WITH/ INDICATED FINISH IF NOT POWDER COATED.
E. FINISH:
  a. COMPLY WITH NAAMM'S "METAL FINISHES MANUAL FOR ARCHITECTURAL AND METAL PRODUCTS" FOR RECOMMENDATIONS FOR APPLYING AND DESIGNATING FINISHES.
  b. POWDER COAT- WHITE-ARCHITECT TO CHOOSE FROM MANUFACTURERS FULL RANGE.

DIVISION 6 WOODS, PLASTICS AND COMPOSITES

6.2 ROUGH CARPENTRY
A. GENERAL: ALL LUMBER AND PLYWOOD TO BE GRADE MARKED IN ACCORDANCE WITH ONE OF THE FOLLOWING AGENCIES: WEST COAST LUMBER;WESTERN WOOD PRODUCTS ASSOCIATION, "GRADING RULES FOR WESTERN LUMBER" OR AMERICAN PLYWOOD ASSOCIATION.
B. ALL NAILING TO BE IN ACCORDANCE WITH THE CBC 2010 TABLE 2304.10.1 UNLESS NOTED OTHERWISE.
C. ALL FRAMING HARDWARE IN CONTACT WITH PRESSURE TREATED LUMBER TO BE HOT STAINLESS STEEL
D. LUMBER GRADES:
  a. ALL SOLID SAWN LUMBER GRADES NOT SPECIFIED TO BE WESTERN RED CEDAR C CLEAR OR BETTER
  b. ALL WOOD IN PERMANENT CONTACT WITH CONCRETE TO BE PRESSURE TREATED OR CEDAR.
  c. EXTERIOR LUMBER TO BE CEDAR OR PRESSURE TREATED UNLESS OTHERWISE NOTED.
  d. ALL PRESSURE TREATED LUMBER TO BE TREATED WITH A PAINT ACCEPTABLE TREATMENT.

6.3 INTERIOR ARCHITECTURAL WOODWORK
A. GENERAL: REFER TO DRAWINGS FOR LOCATION, SPECIES, FINISH, AND PROFILE OF FINISH CARPENTRY ITEMS INCLUDING:
  a. STANDING AND RUNNING TRIM.
  b. INTERIOR WOOD DOOR AND WINDOW FRAMES
  c. WOOD PANELING
B. QUALITY STANDARD:UNLESS OTHERWISE INDICATED, COMPLY WITH AWI'S "ARCHITECTURAL WOODWORK QUALITY STANDARDS"
C. PROVIDE AWI QUALITY CERTIFICATION PROGRAM LABELS AND CERTIFICATES FOR WOODWORK INCLUDING INSTALLATION.
  a. GRADE "CUSTOM" UNLESS NOTED OTHERWISE.

6.4 INTERIOR CASEWORK
A. GENERAL: REFER TO DRAWINGS FOR LOCATION, FINISH, AND PROFILE CASEWORK ITEMS: CONFIRM DESIGN MATERIALS AND FINISHES WITH TENANT
B. QUALITY STANDARD: UNLESS OTHERWISE INDICATED, COMPLY WITH AWI'S ARCHITECTURAL WOODWORK QUALITY STANDARDS"
C. PROVIDE AWI CERTIFICATION PROGRAM LABELS AND CERTIFICATES FOR WOODWORK, INCLUDING INSTALLATION.
D. GRADE "CUSTOM" UNLESS NOTED OTHERWISE
E. MATERIALS:
  a. WOOD SPECIES AND CUT FOR TRANSPARENT FINISH: REFER TO DRAWINGS OR AS SELECTED BY ARCHITECT
  b. WOOD SPECIES FOR OPAQUE FINISH:ANY CLOSED-GRAIN HARDWARE
  c. HARDBOARD: AHA A135.4
  d. SOFTWOOD PLYWOOD: DOC PS 1, MEDIUM DENSITY OVERLAY
  e. THERMOSET DECORATIVE PANELS: PARTICLEBOARD OR MEDIUM-DENSITY FIBERBOARD FINISHED WITH THERMALLY FUSED, MELAMINE-IMPREGNATED DECORATIVE PAPER COMPLYING WITH LMA SAT-1.
  f. HIGH-PRESSURE DECORATIVE LAMINATE: NEMA LD 3, GRADES AS INDICATED OR, IF NOT INDICATED, AS REQUIRED BY WOODWORK QUALITY STANDARD.
  g. SOLID-SURFACING MATERIAL: HOMOGENEOUS SOLID SHEETS OF FILLED PLASTIC RESIN COMPLYING WITH ISSFA-2.
F. CABINET HARDWARE AND ACCESSORIES:
  a. FRAMELESS CONCEALED HINGES (EUROPEAN TYPE): BHMA A156.9, B01602
  b. BACK MOUNTED PULLS: BHMA A156.9, B01602
  c. WIRE PULLS: AMEROCK ALLISON VALUE HARDWARE 96MM BP53003G10 IN SATIN NICKEL
  d. CATCHES: MAGNETIC CATCHES, BHMA 156.9, BO3141, PUSH IN MAGNETIC CATCHES, BHMA 156.9, BO3131, ROLLER CATCHES, BHMA 156.9, BO3071, BALL FRICTION CATCHES, BHMA 156.9, BO3013.
  e. DRAWER SLIDES: BHMA A156.9, BO5091.
  f. DOOR LOCKS: BHMA A156.11, EO7121.
  g. DRAWER LOCKS: BHMA A156.11, EO7121.
G. EXPOSED HARDWARE FINISHES: AS SELECTED BY ARCHITECT OR AS INDICATED ON DRAWINGS AWI TYPE OF CABINET CONSTRUCTION: AS INDICATED.
  a. FABRICATE TOPS IN ONE PIECE WITH SHOP-APPLIED BACK SPLASHES OR LOOSE BACKSPLASHES FOR FIELD APPLICATION.
H. SHOP FINISHING: TRANSPARENT FINISH
  a. GRADE PREMIUM
  b. AWI FINISH SYSTEM: CONVERSION VARNISH
  c. STAINING: MATCH APPROVED FOR SAMPLE COLOR

6.5 ROLLING WOOD LADDERS
A. ALL ROLLING LADDERS SHALL COMPLY WITH OSHA 29 CFR STANDARD 1910.25
B. TYPES:
  a. STRAIGHT ROLLING WOOD LADDER
C. SUBMIT MANUFACTURERS DATA SHEET ON EACH PRODUCT TO IN INCLUDED IN PROJECT.
  a. PREPARATION INSTRUCTION AND RECOMMENDATIONS
  b. STORAGE AND HANDLING REQUIREMENTS AND RECOMMENDATIONS
  c. INSTALLATION METHODS
  d. SHOP DRAWINGS
  e. SECTION SAMPLES FOR EACH FINISH SPECIFIED, TWO COMPLETE SETS OF COLOR CHIPS FROM MANUFACTURERS FULL RANGE
  f. VERIFICATION SAMPLES OF EACH FINISH SPECIFIED MIN 6" X 6" SQUARE
  g. MANUFACTURERS CERTIFICATIONS, CERTIFY PRODUCT MEETS OR EXCEEDS SPECIFIED REQUIREMENTS
D. RECOMMENDED MANUFACTURERS:
  a. PUTMAN ROLLING LADDER COMPANY
  b. ALACO LADDER COMPANY
E. PRODUCTS:
  a. STRAIGHT ROLLING LADDER STEPS SCREWED TO RAILS, NOT NAILED AND RODS ARE PLACED UNDER EACH STEP FOR GREATER STRENGTH
    - HEIGHT: AS INDICATED ON DRAWINGS
    - STEP DEPTH: 4 1/4"
    - SIDE RAIL DEPTH: 3 1/4"
    - WIDTH: 16"
    - WIDTH AT BASE: 26"
    - WOOD: WHITE OAK
    - WOOD FINISH:
      1. STAIN: ARCHITECT TO CHOOSE FROM MANUFACTURERS FULL RANGE
    - TRACK:
      1. DIAMETER: 7/8" TO 1"
      2. LENGTH: AS INDICATED ON DRAWINGS
    - TOP FIXTURE:
      1. ROLL TOP FIXTURE WITH DIE CAST WHEELS
    - BRACKETS PER MANUFACTURERS RECOMMENDATIONS APPROX. 1 BRACKET FOR 3" OF TRACK
    - FIXTURE, BRACKET, AND HARDWARE FINISH:
      1. BLACK POWDER COAT OR
      2. SATIN NICKEL FINISH
    - BOTTOM WHEELS: SPRING LOADED SAFETY WHEELS
      1. CONTEMPORARY STYLE
F. PREPARATION:
  a. CLEAN SURFACES TOUGHLY PRIOR TO INSTALLATION
  b. PREPARE SURFACES PER MANUFACTURERS SPECIFICATIONS
G. INSTALL IN ACCORDANCE WITH MANUFACTURERS INSTRUCTIONS
H. PROTECT INSTALLED PRODUCT UNTIL COMPLETION OF PROJECT. TOUCH-UP, REPAIR OR REPLACED DAMAGED PRODUCTS BEFORE SUBSTANTIAL COMPLETION

6.6 GLUE-LAMINATED CONSTRUCTION
A. PROVIDE STRUCTURAL GLUE-LAMINATED TIMBER THAT COMPLIES WITH ATC 117 OR RESEARCH/EVALUATION REPORTS ACCEPTABLE TO AUTHORITIES HAVING JURISDICTION
B. PROVIDE GLUE-LAMINATED TIMBER MADE WITH SOLID LUMBER LAMINATIONS, DO NOT USE LAMINATED VENEER LUMBER
C. PROVIDE GLUE-LAMINATED TIMBER MADE WITH WET-USE ADHESIVE COMPLYING WITH ATC A190.1
D. SPECIES AND GRADES:DOUGLAS FIR LARCH, GRADE PER STRUCTURAL DRAWINGS
E. APPEARANCE GRADE: ARCHITECTURAL
F. END SEALER:MANUFACTURERS STANDARD, TRANSPARENT COLORLESS WOOD SEALER THAT IS EFFECTIVE IN RETARDING THE TRANSMISSION OF MOISTURE AT CROSS-GRAIN CUTS AND IS COMPATIBLE WITH INDICATED FINISH.
G. END SEALER: MANUFACTURERS STANDARD, TRANSPARENT PENETRATING WOOD SEALER THAT IS COMPATIBLE WITH INDICATED FINISH.
H. MANUFACTURER'S QUALIFICATION:PROVIDE FACTORY GLUED STRUCTURAL UNITS PRODUCED BY AN AITC- OR APA LICENSED FIRM. FACTORY MARK EACH PIECE OF GLUE-LAMINATED TIMBER WITH AITC-QUALITY MARK OR APA-EWS TRADEMARK. PLACE MARK ON SURFACE THAT WILL BE NOT BE EXPOSED IN THE COMPLETED WORK.
I. DELIVERY STORAGE AND HANDLING COMPLY WITH PROVISIONS IN AITC 111.
J. TIMBER CONNECTIONS: STRUCTURAL STEEL SHAPES, PLATES AND FLAT BARS COMPLY WITH ASTM A 36/A 36M. ROUND STEEL BARS COMPLY WITH ASTM A 575, GRADE M1020. HOT ROLLED STEEL SHEET COMPLY WITH ASTM A 1011/A 1011M, STRUCTURAL STEEL. TYPE SS GRADE 33.
K. FINISH STEEL ASSEMBLIES AND FASTENERS WITH RUST INHIBITIVE PRIMER 2-MIL DRY FILM.
L. HOT-DIP GALVANIZED STEEL ASSEMBLIES AND FASTENERS AFTER FABRICATION TO COMPLY WITH ASTM A 123/A 123M OR ASTM A 153/A 153M.
M. ALL CONNECTIONS TO BE EITHER FACTORY FINISHED, BLACK POWDER COAT OR PAINTED BLACK.
N. SHOP FABRICATE FOR CONNECTIONS TO GREATEST EXTEND POSSIBLE, INCLUDING CUTTING TO LENGTH AND DRILLING BOLT HOLES
O. END-CUTTING SEALING: IMMEDIATELY AFTER END CUTTING EACH MEMBER TO FINAL LENGTH, APPLY A SATURATION COAT OF END SEALER TO ENDS AND OTHER CROSS-CUT SURFACES. KEEP SURFACES FLOOD COATED FOR NOT LESS THEN 10 MINUTES
P. SEAL COAT: AFTER FABRICATION, SANDING AND END COAT SEALING, APPLY A HEAVY SATURATION COAT OF PENETRATING SEALER ON SURFACES OF EACH UNIT.
Q. INSTALLATION: ERECT GLUE-LAMINATED TIMBER TRUE AND PLUMB AND WITH UNIFORM, CLOSE FITTING JOINTS. PROVIDE TEMPORARY BRACING TO MAINTAIN LINES AND LEVELS UNTIL PERMANENT SUPPORTING MEMBERS ARE IN PLACE LIFT WITH PADDED SLING.
R. AVOID CUTTING AFTER FABRICATION. WHERE FIELD FITTING IS UNAVOIDABLE, COMPLY WITH REQUIREMENTS FOR SHOP FABRICATION.
S. REPAIR DAMAGED SURFACES AFTER COMPLETING ERECTION . REPLACE DAMAGED GLUE-LAMINATED TIMBER IF REPAIRS ARE NOT APPROVED BY THE ARCHITECT.

DIVISION 7 THERMAL AND MOISTURE PROTECTION

7.1 BUILDING INSULATION
A. SOUND INSULATION : 3 1/2" SOUND ATTENUATION INSULATION AT ALL INTERIOR WALLS AS NOTED ON PLANS
B. R-19 BATT INSULATION INDICATED ON DRAWINGS INSTALLED IN METAL OR WOOD FRAMED WALLS SHALL BE INSULATED THE FULL DEPTH OF THE CAVITY, UP TO 6 INCHES IN DEPTH PER TABLE 13E OF THE IBC.
C. FASTENERS
  a. ADHESIVELY ATTACHED, SPINDLE TYPE ANCHORS: PLATE FORMED FROM PERFORATED GALVANIZED CARBON -STEEL SHEET, 0.030 INCH (0.762MM) THICK BY 2 INCHES (50 MM) SQUARE, WELDED TO PROJECTING COPPER COATED STEEL SPINDLE 0.105 INCH (2.67 MM) IN DIAMETER OF LENGTH CAPABLE OF HOLDING INSULATION OF THICKNESS INDICATED SECURELY IN POSITION WITH 1-1/2 INCH- (38-MM-) SQUARE OR DIAMETER SELF LOCKING WASHERS.
D. ANCHOR ADHESIVE: PRODUCT WITH DEMONSTRATED CAPABILITY TO BOND INSULATION ANCHORS SECURELY TO SUBSTRATE INDICATED WITHOUT DAMAGING INSULATION, FASTENERS, AND SUBSTRATES.
E. INSULATION INSTALLATION, GENERAL:
  a. COMPLY WITH INSULATION MANUFACTURER'S WRITTEN INSTRUCTIONS APPLICABLE TO PRODUCTS AND APPLICATION INDICATED
  b. INSTALL INSULATION THAT IS UNDAMAGED, DRY, AND UNSOILED AND THAT HAS NOT BEEN LEFT EXPOSED AT ANY TIME TO ICE, RAIN, OR SNOW.
  c. EXTEND INSULATION IN THICKNESS INDICATED TO ENVELOP AN ENTIRE AREA TO BE INSULATED. CUT AND FIT TIGHTLY AROUND OBSTRUCTIONS AND FILL VOIDS WITH INSULATION. REMOVE PROJECTIONS THAT INTERFERE WITH PLACEMENT.

7.2 ADHESIVE, SEALANT, CAULKS
A. ADHESIVE AND SEALANT USED ON THE PROJECT SHALL MEET THE REQUIREMENT OF THE FOLLOWING STANDARDS. (SECTION 5.504.4.1 OF CAL GREEN) ADHESIVES, ADHESIVE BONDING PRIMERS, ADHESIVE PRIMERS, SEALANTS, SEALANT PRIMERS, AND CAULK SHALL COMPLY WITH LOCAL OR REGIONAL AIR POLLUTION CONTROL OR AIR QUALITY MANAGEMENT DISTRICT RULES WHERE APPLICABLE OR SCAQMD RULE 1168 VOC LIMITS, AS SHOWN IN TABLES 5.504.4.1 AND 5.504.4.2 OF CAL GREEN (SEC. 5.504.4.1)
B. AEROSOL ADHESIVE, AND SMALLER UNIT SIZES OF ADHESIVE, AND SEALANT OR CAULKING COMPOUNDS (IN UNIT OF PRODUCT, LESS PACKAGING, WHICH DO NOT WEIGH MORE THAN ONE POUND AND DO NOT CONSIST OF MORE THAN 16 FLUID OUNCES) SHALL COMPLY WITH STATEWIDE VOC STANDARDS AND OTHER REQUIREMENTS, INCLUDING PROHIBITIONS ON USE OF CERTAIN TOXIC COMPOUNDS OF CALIFORNIA CODE OF REGULATIONS, TITLE 17, COMMENCING WITH SECTION 94507.

7.3 SEALANTS
A. PRECONSTRUCTION TESTING
  a. PRECONSTRUCTION COMPATIBILITY AND ADHESION TESTING:USE MANUFACTURERS STANDARD TEST METHOD TO DETERMINE WHETHER PRIMING AND OTHER JOINT SPECIFICATION, JOINT PREPARATION TECHNIQUES ARE REQUIRED TO OBTAIN RAPID, OPTIMUM ADHESION OF JOINT SEALANTS TO JOIN SUBSTRATES.
  b. PRECONSTRUCTION FIELD ADHESION TESTING: BEFORE INSTALLING SEALANTS, FIELD TEST THEIR ADHESION TO PROJECT JOINT SUBSTRATES. TEST JOINT SEALANTS ACCORDING TO METHOD A , FIELD-APPLIED SEALANT JOINT HAND PULL TAB, IN APPENDIX X1 IN ASTM C 1193 OR METHOD A, TAIL PROCEDURE, IN ASTM C 1521.
  c. TESTING AGENCY QUALIFICATIONS: QUALIFIED ACCORDING TO ASTM C 1021 TO CONDUCT THE TESTING INDICATED.
B. WARRANTY
  a. SPECIAL INSTALLERS WARRANTY: MANUFACTURER'S STANDARD FORM IN WHICH INSTALLER AGREES TO REPAIR OR REPLACE JOINT SEALANTS THAT DO NOT COMPLY WITH PERFORMANCE AND OTHER REQUIREMENTS SPECIFIED IN THIS SECTION WITHIN SPECIFIED WARRANTY PERIOD (TWO YEARS FROM DATE OF SUBSTANTIAL COMPLETION)
  b. SPECIAL MANUFACTURER;S WARRANTY: MANUFACTURER'S STANDARD FORM IN WHICH JOINT-SEALANT MANUFACTURER AGREES TO FURNISH JOINT SEALANTS TO REPAIR OR REPLACE THOSE THAT DO NOT COMPLY WITH PERFORMANCE AND OTHER REQUIREMENTS SPECIFIED IN THIS SECTION WITHIN SPECIFIED WARRANTY PERIOD (WITHIN 2 YEARS FROM DATE OF SUBSTANTIAL COMPLETION)
C. SILICONE JOINT SEALANTS
  a. MILDEW RESISTANT NEUTRAL-CURING SILICONE JOINT SEALANT: ASTM C 920.
  b. TYPE: SINGLE COMPONENT (S).
  c. GRADE: (NONSAC (NS))
  d. CLASS 100/50.
  e. USES RELATED TO EXPOSURE: NONTRAFFIC (NT).
D. ACOUSTICAL JOINT SEALANTS:
  a. ACOUSTICAL JOINT SEALANT: MANUFACTURER'S STANDARD NONSAG, PAINTABLE NON-STAINING LATEX, SEALANT COMPLYING WITH ASTM C 834. PRODUCT EFFECTIVELY REDUCES AIRBORNE SOUND TRANSMISSION THROUGH PERIMETER JOINTS AND OPENINGS IN BUILDING CONSTRUCTION AS DEMONSTRATED BY TESTING REPRESENTATIVE ASSEMBLIES ACCORDING TO ASTM E 90.
E. JOINT SEALANT BACKING:
  a. CYLINDRICAL SEALANT BACKINGS:ASTM C 1330, TYPE C (CLOSED CELL MATERIAL WITH A SURFACE SKIN), TYPE O (OPEN-CELL MATERIAL), TYPE B (BICELLULAR MATERIAL WITH A SURFACE SKIN), OR ANY OF THE PRECEDING TYPES, AS APPROVED IN WRITING BY JOINT-SEALANT MANUFACTURER FOR JOINING APPLICATION INDICATED , AND OF SIZE AND DENSITY TO CONTROL SEALANT DEPTH AND OTHERWISE CONTRIBUTE TO PRODUCING OPTIMUM SEALANT PERFORMANCE.
  b. BOND-BREAKER TAPE: POLYETHYLENE TAPE OR OTHER PLASTIC TAPE RECOMMENDED BY SEALANT MANUFACTURER.
F. MISCELLANEOUS MATERIALS:
  a. PRIMER: MATERIAL RECOMMENDED BY JOINT-SEALANT MANUFACTURER WHERE REQUIRED FOR ADHESION OF SEALANT TO JOINT SUBSTRATES INDICATED, AS DETERMINED FROM PRECONSTRUCTION JOINT-SEALANT-SUBSTRATE TESTS AND FIELD TESTS.
  b. CLEANERS FOR NON POROUS SURFACES: CHEMICAL CLEANERS ACCEPTABLE TO MANUFACTURERS OF SEALANTS AND SEALANT BACKING MATERIALS
  c. MASKING TAPE: NONSTAINING, NONABSORBENT MATERIAL COMPATIBLE WITH JOINT SEALANTS
G. SURFACE CLEANING OF JOINTS: CLEAN OUT JOINTS IMMEDIATELY BEFORE INSTALLING JOINT SEALANTS TO COMPLY WITH JOINT-SEALANT MANUFACTURER'S WRITTEN INSTRUCTIONS.
  a. REMOVE LAITANCE AND FORM -RELEASE AGENTS OF CONCRETE
  b. CLEANERS FOR NON-POROUS JOINT SUBSTRATE SURFACES WITH CHEMICAL CLEANERS OR OTHER MEAN THAT DO NOT STAIN, HARM SUBSTRATES, OR LEAVE RESIDUES CAPABLE OF INTERFERING WITH ADHESION OF JOINT SEALANTS.
H. INSTALLATION:
  a. SEALANT INSTALLATION STANDARD: COMPLY WITH RECOMMENDATIONS IN ASTM C 1193 FOR USE OF JOINT SEALANTS AS APPLICABLE TO MATERIALS, APPLICATIONS, AND CONDITIONS INDICATED.
  b. INSTALL SEALANT BACKINGS OF KIND INDICATED TO SUPPORT SEALANTS DURING APPLICATION AND AT RELATIVE TO JOINT WIDTHS THAT ALLOW OPTIMUM SEALANT MOVEMENT CAPABILITY
  c. DO NOT LEAVE GAPS IN BETWEEN ENDS OF SEALANT BACKINGS
  d. DO NOT STRETCH TWIST, PUNCTURE, OR TEAR SEALANT BACKINGS
  e. REMOVE ABSORBENT SEALANT BACKINGS THAT HAVE BECOME WET BEFORE SEALANT APPLICATION AND REPLACE THEM WITH DRY MATERIALS.
I. INSTALL BOND-BREAKER TAPE BEHIND SEALANTS WHERE SEALANT BACKINGS ARE NOT USED BETWEEN SEALANTS AND BACKING OF JOINTS.
J. INSTALL SEALANTS USING PROVEN TECHNIQUES THAT COMPLY WITH THE FOLLOWING AND AT THE SAME TIME BACKINGS ARE INSTALLED.
  a. PLACE SEALANTS SO THEY CAN DIRECTLY CONTACT AND FULLY WET JOINT SUBSTRATES
  b. COMPLETELY FILL RECESSES IN EACH JOINT CONFIGURATION
  c. PRODUCE UNIFORM, CROSS SECTIONAL SHAPES AND DEPTHS RELATIVE TO JOINT WIDTHS THAT ALLOW OPTIMUM SEALANT MOVEMENT CAPABILITY.
K. TOOLING OF NON-SAG SEALANTS:IMMEDIATELY AFTER SEALANT APPLICATION AND BEFORE SKINNING OR CURING BEGINS, TOOL SEALANTS ACCORDING TO REQUIREMENTS SPECIFIED IN SUBPARAGRAPHS BELOW TO FORM SMOOTH, UNIFORM BEADS OF CONFIGURATION INDICATED; TO ELIMINATE AIRPOCKETS, AND TO ENSURE CONTACT AND ADHESION OF SEALANT WITH SIDES OF JOINT.
  a. REMOVE EXCESS SEALANT FROM SURFACES ADJACENT TO JOINTS
  b. USE TOOLING AGENTS THAT ARE APPROVED IN WRITING BY SEALANT MANUFACTURER AND THAT DO NOT DISCOLOR SEALANTS OR ADJACENT SURFACES
  c. PROVIDE CONCAVE JOINT PROFILE PER FIGURE 8A IN ASTM C 1193, UNLESS OTHERWISE INDICATED.
L. ACOUSTICAL SEALANT INSTALLATION: COMPLY WITH ASTM C 919 AND WITH MANUFACTURERS WRITTEN RECOMMENDATIONS
M. CLEAN OFF EXCESS SEALANT OR SEALANT SMEARS ADJACENT TO JOINTS AS THE WORK PROGRESSES BY METHODS AND WITH CLEANING MATERIALS APPROVED IN WRITING BY MANUFACTURERS OF JOINT SEALANTS AND OF PRODUCTS IN WHICH JOINTS OCCUR.
N. FIELD-ADHESION TESTING: FIELD TEST JOINT-SEALANT ADHESION TO JOINT SUBSTRATES AS FOLLOWS:
  a. PERFORM 10 TESTS FOR THE FIRST 1000 FEET OF JOINT LENGTH FOR EACH KIND OF SEALANT AND JOINT SUBSTRATE.
  b. PERFORM 1 TEST FOR EACH 1000 FEET OF JOINT LENGTH THEREAFTER OR 1 TEST PER EACH FLOOR PER ELEVATION
  c. TEST METHOD: TEST JOINT SEALANTS ACCORDING TO METHOD A., FIELD APPLIED SEALANT JOINT HAND APPLIED TAB, IN APPENDIX X1 IN ASTM C 1193 OR METHOD A, TAIL PROCEDURE, IN ASTM C 1521.
  d. EVALUATION OF FIELD ADHESION TEST RESULTS: SEALANTS NOT EVIDENCING ADHESIVE FAILURE FROM SATISFACTORY. REMOVE SEALANTS THAT FAIL TO ADHERE TO JOINT SUBSTRATES DURING TESTING, OR TO COMPLY WITH OTHER REQUIREMENTS. RETEST FAILED APPLICATIONS UNTIL TEST RESULTS PROVE SEALANTS COMPLY WITH INDICATED REQUIREMENTS.
O. INTERIOR JOINTS IN HORIZONTAL TRAFFIC SURFACES.
  a. CONTROL AND EXPANSION JOINTS IN THE TILE FLOORING
  b. OTHER JOINTS AS INDICATED
  c. JOINT SEALANT: URETHANE
  d. JOINT SEALANT COLOR: AS SELECTED BY ARCHITECT FROM MANUFACTURERS FULL RANGE OF COLORS
P. INTERIOR JOINTS IN VERTICAL SURFACES AND HORIZONTAL NONTRAFFIC SURFACES
  a. VERTICAL JOINTS ON EXPOSED SURFACES OF WALLS AND PARTITIONS
  b. PERIMETER JOINTS BETWEEN INTERIOR WALL SURFACES AND FRAMES OF INTERIOR DOORS AND WINDOWS
  c. OTHER JOINTS AS INDICATED
  d. JOINT SEALANT: LATEX
  e. JOINT SEALANT COLOR: AS SELECTED BY ARCHITECT FROM MANUFACTURERS FULL RANGE OF COLORS.
Q. MILDEW RESISTANT INTERIOR JOINTS IN VERTICAL SURFACES.
  a. JOINTS BETWEEN PLUMBING FIXTURES AND ADJOINING WALLS, FLOORS, AND COUNTERS.
  b. TILE CONTROL AND EXPANSION JOINTS WHERE INDICATED
  c. OTHER JOINTS AS INDICATED
  d. JOINT-SEALANT COLOR: AS SELECTED BY ARCHITECT FROM MANUFACTURER'S FULL RANGE OF COLORS
R. JOINT-SEALANT APPLICATION: INTERIOR ACOUSTICAL JOINTS IN VERTICAL SURFACES AND HORIZONTAL NON-TRAFFIC SURFACES.
  a. ACOUSTICAL JOINTS WHERE INDICATED
  b. OTHER JOINTS AS INDICATED
  c. JOINT SEALANT: ACOUSTICAL
  d. JOINT-SEALANT COLOR: AS SELECTED BY ARCHITECT FROM MANUFACTURER'S FULL RANGE OF COLORS

DIVISION 8 OPENINGS

8.1 HOLLOW METAL DOORS AND FRAMES
A. FRAME ANCHORS: ASTM A 591/ A 591 M, COMMERCIAL STEEL (CS), 4 OZ (12G) COATING DESIGNATION ; MILL PHOSPHATIZED
B. INSERTS, BOLTS AND FASTENERS: HOT DIP GALVANIZED ACCORDING TO ASTM A 153/A 153M.
C. INTERIOR DOORS: FACE SHEETS FABRICATED FROM COLD ROLLED STEEL SHEET. PROVIDE DOORS COMPLYING WITH ANSI/SDI A250.8 FOR LEVEL AND MODEL AND ANSI/SDI A250.4 FOR LEVEL 1 (STANDARD DUTY), MODEL 1 (FULL FLUSH).
D. HARDWARE REINFORCEMENT: ANSI/SDI A250.6.
E. STANDARD HOLLOW METAL FRAMES:
  a. GENERAL: COMPLY WITH ANSI/SDI A250.8
F. INTERIOR FRAMES: FABRICATED FROM COLD-ROLLED STEEL SHEET.
  a. FABRICATE FRAMES WITH MITERED OR COPED CORNERS
  b. FABRICATE FRAMES AS KNOCKED DOWN UNLESS OTHERWISE INDICATED
  c. FRAMES FOR LEVEL 1 STEEL DOORS: 0.042-INCH- (1.0-MM-) THICK STEEL SHEET.
  d. FRAMES FOR WOOD DOORS: 0.042-INCH-(1.0-MM-) THICK STEEL SHEET
G. FRAMES FOR BORROWED LIGHTS: SAME AS ADJACENT DOOR FRAME.
H. HARDWARE REINFORCEMENT:ANSI/SDI A250.6.
I. MOLDINGS FOR GLAZED LITES IN DOORS: MINIMUM 0.032 INCH (0.8MM) THICK, SAME MATERIAL AS DOOR FACE SHEET.
  a. FIXED FRAME MOLDINGS: FORMED INTEGRAL WITH HOLLOW METAL FRAMES, A MINIMUM OF 5/8 INCH (16MM) HIGH UNLESS OTHERWISE UNLESS OTHERWISE INDICATED
  b. LOOSE STOPS FOR GLAZED LITES IN FRAMES: MINIMUM 0.032 INCH (0.8 MM) THICK, SAME MATERIAL AS FRAMES
J. FABRICATION:
  a. GLAZED LITES: FACTORY CUT OPENINGS IN DOORS
  b. HOLLOW METAL FRAMES: WHERE FRAMES ARE FABRICATED IN SECTIONS, PROVIDE ALIGNMENT PLATES OR ANGLES AT EACH JOINT, FABRICATED OF SAME THICKNESS OF METAL AS FRAMES
  c. PROVIDE COUNTERSUNK, FLAT- OR -OVAL- HEAD EXPOSED SCREWS AND BOLTS FOR EXPOSED FASTENERS UNLESS OTHERWISE INDICATED.
  d. DOOR SILENCERS: EXCEPT ON WEATHER- STRIPPED DOORS, DRILL STOPS TO RECEIVE DOOR SILENCERS
  e. HARDWARE PREPARATION: FACTORY PREPARE HOLLOW METAL WORK TO RECEIVE TEMPLATED MORTISED HARDWARE ACCORDING TO DOOR HARDWARE SCHEDULE.
  f. STOPS AND MOLDINGS: PROVIDE STOPS AND MOLDINGS AROUND GLAZED LIFTS WHERE INDICATED. FORM CORNERS AND OF STOPS AND MOLDINGS WITH BUTTED OR MITERED HAIRLINE JOINTS
K. STEEL FINISHES:
  a. PRIME FINISH:APPLY MANUFACTURER'S STANDARD PRIMER IMMEDIATELY AFTER CLEANING AND PRETREATING
  b. FACTORY APPLIED
  c. PAINT FINISH: ANSI/SDI A250.3 COLOR AND GLOSS: AS SELECTED BY ARCHITECT FROM MANUFACTURER'S FULL RANGE.

8.2 FLUSH WOOD DOORS
A. INTERIOR SOLID-CORE DOORS:
  a. GRADE: CUSTOM (GRADE A FACES)
  b. SPECIES: SELECT WHITE BIRCH
  c. CUT: PLAIN SLICED (FLAT SLICED)
  d. MATCH BETWEEN VENEER LEAVES: (PLEASING MATCH)
  e. ASSEMBLY OF VENEER LEAVES ON DOOR FACES: BALANCE MATCH PAIR AND SET MATCH: PROVIDE FOR DOORS HUNG IN SAME OPENING OR SEPARATED ONLY BY MULLIONS
  f. CORE: PARTICLEBOARD EXCEPT FOR DOORS INDICATED TO RECEIVE EXIT DEVICES.
  g. CONSTRUCTION: FIVE PLIES. STILES AND RAILS ARE BONDED TO CORE, THEN ENTIRE UNIT ABRASIVE PLANED BEFORE VENEERING.
B. FABRICATION:
  a. FACTORY FIT DOORS TO SUIT FRAME-OPENING SIZE INDICATED. COMPLY WITH CLEARANCE REQUIREMENTS OF REFERENCED QUALITY STANDARD FOR FITTING UNLESS OTHERWISE INDICATED.
  b. COMPLY WITH REQUIREMENTS IN NFPA 80 FOR FIRE-RATED DOORS
  c. FACTORY MACHINE DOORS FOR HARDWARE THAT IS NOT SURFACE APPLIED
  d. OPENINGS: CUT AND TRIM OPENINGS THROUGH DOORS IN FACTORY
C. FACTORY FINISHING:
  a. GENERAL: COMPLY WITH REFERENCED QUALITY STANDARD FOR FACTORY FINISHING. COMPLETE FABRICATION, INCLUDING FITTING DOORS FOR OPENINGS AND MATCHING FOR HARDWARE THAT IS NOT SURFACE APPLIED, BEFORE FINISHING. FINISH FACES, ALL FOUR EDGES, ALL OF CUTOUTS, AND MORTISES. STAINS AND FILLERS MAY BE OMITTED ON BOTTOM EDGES OF CUTOUTS, AND MORTISES.
  b. TRANSPARENT FINISH: GRADE CUSTOM
  c. FINISH: AWI CONVERSION VARNISH OR CATALYZED POLYURETHANE SYSTEM
  d. STAINING: AS SELECTED BY ARCHITECT FROM MANUFACTURERS FULL RANGE.

8.2 INTERIOR TRAFFIC DOORS
A. STAINING STEEL CLAD SWING DOORS
  a. ADJUSTABLE GRAVITY CLOSE HARDWARE SYSTEM WITH PANEL MOUNTED HINGE BODY AND JAMB MOUNTED BRACKET
  b. WINDOWS SHALL BE 9" X 14" SHATTER RESISTANT ACRYLIC SET IN BLACK RUBBER MOLDING. ALL WINDOWS SHALL BE FACTORY INSTALLED AND SEALED.
B. ACCEPTABLE MANUFACTURER'S INCLUDE BUT ARE NOT LIMITED TO THE FOLLOWING:
  a. CHASE DOORS
  b. ELIASONCORP
  c. PAYLON

8.3 ALUMINUM FRAMED STOREFRONT SYSTEMS (SEE A 5.1 FOR ENERGY PERFORMANCE REQUIREMENTS)
A. DELEGATED DESIGN: DESIGN ALUMINUM FRAMED SYSTEMS, INCLUDING COMPREHENSIVE ENGINEERING ANALYSIS BY A QUALIFIED PROFESSIONAL ENGINEER, USING PERFORMANCE AND DESIGN CRITERIA INDICATED.
  a. DEFLECTION NORMAL TO WALL PLANE LIMITED TO 1/175 OF CLEAR SPAN FOR SPANS UP TO 13 FEET 6 INCHES (4.1 M) AND TO 1/240 OF CLEAR SPAN PLUS 1/4 INCH (6.35 MM) FOR SPANS GREATER THEN 13 FEET 6 INCHES (4.1M) OR AN AMOUNT THAT RESTRICTS EDGE DEFLECTION OF INDIVIDUAL GLAZING LITES TO 3/4 INCH (19MM), WHICHEVER IS LESS.
  b. DEFLECTION PARALLEL TO GLAZING PLANE:LIMITED TO AMOUNT NOT EXCEEDING THAT WHICH REDUCES GLAZING BITE TO LESS THAN 75 PERCENT OF DESIGN DIMENSION AND THAT WHICH REDUCES EDGE CLEARANCE BETWEEN FRAMING MEMBERS AND GLAZING OR OTHER FIXED COMPONENTS DIRECTLY BELOW THEM TO LESS THAN 1/8 INCH (3.2MM) AND CLEARANCE BETWEEN MEMBERS AND OPERABLE UNITS DIRECTLY BELOW THEM TO LESS THAN 1/16 INCH (1.5MM).
B. PROVIDE ALUMINUM FRAMED SYSTEMS TESTED ACCORDING TO ASTM E 330.
C. AIR INFILTRATION: PROVIDE ALUMINUM FRAMED SYSTEMS WITH MAXIMUM AIR LEAKAGE THROUGH FIXED GLAZING AND FRAMING AREAS OF 0.06 CFM/SQ. FT. (0.03 L/S PER SQ. M) OF FIXED WALL AREA WHEN TESTED ACCORDING TO ASTM E 283 AT A MINIMUM STATIC AIR PRESSURE DIFFERENCE OF 1.57 LBF/SQ. FT. (75 PA)
D. WATER PENETRATION UNDER STATIC PRESSURE: PROVIDE ALUMINUM FRAMED SYSTEMS THAT DO NOT EVIDENCE WATER PENETRATION THROUGH GLAZING AND FRAMING AREAS WHEN TESTED ACCORDING TO ASTM E 331 AT A MINIMUM STATIC AIR PRESSURE DIFFERENCE OF 20 PERCENT OF POSITIVE WIND LOAD DESIGN PRESSURE, BUT NOT LESS THAN 6.24 LBF/SQ. FT. (300 PA).
E. SHOP DRAWINGS: FOR ALUMINUM FRAMED SYSTEMS. INCLUDE PLANS, ELEVATIONS, SECTIONS, DETAILS AND ATTACHMENTS TO OTHER WORK.
F. DELEGATED DESIGN SUBMITTAL:FOR ALUMINUM FRAMED SYSTEMS INDICATED TO COMPLY WITH PERFORMANCE REQUIREMENTS AND DESIGN CRITERIA , INCLUDING ANALYSIS DATA SIGNED AND SEALED BY THE QUALIFIED PROFESSIONAL ENGINEER RESPONSIBLE FOR THEIR PREPARATION.
G. ACCESSIBLE ENTRANCES: COMPLY WITH APPLICABLE PROVISIONS IN THE U.S. ARCHITECTURAL AND TRANSPORTATION BARRIERS COMPLIANCE BOARDS ADA-ABA ACCESSIBILITY GUIDELINES AND ICC/ANSI A117.1
H. AVAILABLE MANUFACTURER'S OFFERING PRODUCTS THAT MAY BE INCORPORATED INTO THE WORK INCLUDE BUT ARE NOT LIMITED TO THE FOLLOWING:
  a. PRE-MATCH EXISTING
I. SYSTEM DESCRIPTION/BASIS OF DESIGN:
  a. FRAMING MEMBERS: MANUFACTURER'S STANDARD EXTRUDED ALUMINUM FRAMING MEMBERS OF THICKNESS REQUIRED AND REINFORCED AS REQUIRED TO SUPPORT IMPOSED LOADS
  b. CONSTRUCTION: THERMALLY BROKEN
  c. GLAZING SYSTEM: RETAINED MECHANICALLY WITH GASKETS ON FOUR SIDES
  d. GLAZING PLANE: AS INDICATED ON DRAWING
J. GLAZING GASKETS: MANUFACTURER'S STANDARD COMPRESSION TYPES; REPLACEABLE MOLDED OR EXTRUDED, OF PROFILE AND HARDNESS REQUIRED TO MAINTAIN WATERTIGHT SEAL.
K. SPACERS AND SETTING BLOCKS: MANUFACTURER'S STANDARD ELASTOMETRIC TYPE
L. ENTRANCE DOORS: MANUFACTURER'S STANDARD GLAZED ENTRANCE DOORS FOR MANUAL-SWING OPERATION
  a. DOOR CONSTRUCTION: 1-3/4 INCH (44.5-MM) OVERALL THICKNESS, WITH A MINIMUM 0.125-INCH-(3.2-MM-) THICK , EXTRUDED ALUMINUM TUBULAR RAIL AND STILE MEMBERS. MECHANICALLY FASTEN CORNERS WITH REINFORCING BRACKETS THAT ARE DEEPLY PENETRATED AND FILLET WELDED OR THAT INCORPORATE CONCEALED RODS.
M. DOOR DESIGN: STILE TO MATCH EXISTING
N. FINISH AND COLOR:
  a. COLORED ALUMINUM PERFORMANCE SPECIFICATION AAMA 2605 OR FACTORY PRIME.
  b. ARCHITECT TO CHOOSE FROM FULL RANGE OR PAINT PER FINISH SCHEDULE

8.4 HARDWARE
A. PRODUCT DATA SUBMITTALS: PROVIDE FOR EACH TYPE OF PRODUCT INDICATED .
B. HARDWARE SCHEDULE SUBMITTALS:PREPARED BY OR UNDER THE SUPERVISION OF INSTALLER, DETAILING FABRICATION AND ASSEMBLY OF DOOR HARDWARE, AS WELL AS PROCEDURES AND DIAGRAMS
C. GENERAL: PROVIDE DOOR HARDWARE FOR EACH DOOR TO COMPLY WITH REQUIREMENTS IN THIS SECTION AND DOOR HARDWARE SETS INDICATED IN DOOR AND FRAME SCHEDULE
D. ACCESSIBILITY REQUIREMENTS: PROVIDE LEVER TYPE OPERATING DEVICES THAT DO NOT REQUIRE TIGHT GRASPING, PINCHING, OR TWISTING OF THE WRIST AND THAT OPERATE OF A FORCE NOT MORE THAN 5 LBF (22 N).
E. LATCHES AND LOCKS FOR MEANS OF EGRESS DOORS: COMPLY WITH NFPA 101. LATCHES SHALL NOT REQUIRE MORE THAN 15 LBF (67 N) TO RELEASE THE LATCH . LOCKS SHALL NOT REQUIRE THE USE OF A KEY , TOOL OR SPECIAL KNOWLEDGE FOR OPERATION.
F. BUTTS AND HINGES BHMA A156.1
G. TEMPLATE HINGE DIMENSIONS: BHMA A156.7
H. PIVOTS: BHMA A156.4
I. CONTINUOUS , GEAR TYPE HINGES: BHMA A156.26, GRADE 1
J. ELECTRIFIED LOOKING DEVICES: BHMA A156.25
K. MANUAL FLUSH BOLTS:BHMA A156.16, GRADE 1; DESIGNED FOR MORTISING INTO DOOR EDGE
L. EXIT DEVICES: BHMA A156.3, GRADE 1
M. STANDARD LOCK CYLINDERS: BHMA 156.5, GRADE 1
  a. OCCUPIED INDICATOR AT RESTROOMS
N. CYLINDERS: MANUFACTURER'S STANDARD TUMBLER TYPE, CONSTRUCTED FROM BRASS OR BRONZE, STAINLESS STEEL, OR NICKEL SILVER, AND COMPLYING WITH THE FOLLOWING:
  a. NUMBER OF PINS: SIX.
O. MATERIALS: FABRICATE FROM STAINLESS STEEL, UNLESS OTHERWISE INDICATED
P. DOOR CLOSERS FOR MEANS OF EGRESS DOORS: COMPLY WITH NFPA 101. DOOR CLOSERS SHALL NOT REQUIRE MORE THAN 30 LBF (133 N) TO SET DOOR IN MOTION AND NOT MORE THAN 15 LBF (67 N) TO OPEN DOOR TO MINIMUM REQUIRED WIDTH.
Q. SURFACE CLOSERS: BHMA A 156.4, GRADE 1. PROVIDE TYPE OF ARM REQUIRED FOR CLOSER TO BE LOCATED ON NON-PUBLIC SIDE OF DOOR, UNLESS OTHERWISE INDICATED.
R. METAL PROTECTIVE TRIM UNITS: BHMA A156.6: BEVELED TOP AND 2 SIDES; FABRICATED FROM 0.050-INCH-(1.3-MM-) THICK STAINLESS STEEL.
  a. STOPS AND BUMPERS:BHMA A156.16, GRADE 1.
  b. SILENCERS FOR DOOR FRAMES: BHMA A156.16, GRADE 1;NEOPRENE OR RUBBER; FABRICATED FOR DRILLED IN APPLICATION TO FRAME.
S. DOOR GASKETING: BHMA A156.22
T. THRESHOLDS: BHMA A156.21.
  a. ACCESSIBILITY REQUIREMENTS: BEVEL RAISED THRESHOLDS WITH A SLOPE OF NOT MORE THAN 1:2. PROVIDE THRESHOLDS NOT MORE THAN 1/2 INCH (13MM) HIGH.
U. INSTALLATION:
  a. STEEL DOORS AND FRAMES: COMPLY WITH DHI A115 SERIES. DRILL AND TAP DOORS AND FRAMES FOR SURFACE APPLIED DOOR HARDWARE ACCORDING TO ANSI A250.6.
  b. WOOD DOORS: COMPLY WITH DHI A115-W SERIES.

8.5 GLAZING
A. SUBMIT PRODUCT DATA: FOR EACH GLASS PRODUCT AND GLAZING MATERIAL INDICATED.
B. SUBMIT GLASS SAMPLES: FOR EACH TYPE OF GLASS PRODUCT OTHER THAN CLEAR MONOLITHIC VISION GLASS; 12 INCHES (300MM) SQUARE.
C. SAFETY GLAZING LABELING: WHERE SAFETY GLAZING LABELING IS INDICATED, PERMANENTLY MARK GLAZING WITH CERTIFICATION LABEL OF THE SGCC AND ANOTHER CERTIFICATION AGENCY ACCEPTABLE TO AUTHORITIES HAVING JURISDICTION. LABEL SHALL INDICATE MANUFACTURER'S NAME, TYPE OF GLASS, THICKNESS AND SAFETY GLAZING STANDARD WITH WHICH GLASS COMPLIES.
D. INSULATING-GLASS CERTIFICATION PROGRAM: PERMANENTLY MARKED EITHER ON SPACERS OR ON AT LEAST ONE COMPONENT LITE OF UNITS WITH APPROPRIATE CERTIFICATION LABEL OF IGCC.
E. FLOAT GLASS: ASTM C 1036, TYPE I, QUALITY Q-3, CLASS 1 (CLEAR) UNLESS OTHERWISE INDICATED.
F. HEAT-TREATED FLOAT GLASS:ASTM C 1048; TYPE I; QUALITY-Q3;CLASS 1 (CLEAR) UNLESS OTHERWISE INDICATED.
G. TEMPERED GLASS: ASTM C 1048, KIND FT (FULLY TEMPERED), TYPEII, CLASS 1 (CLEAR), FORM 3; QUALITY-Q6 UNLESS OTHERWISE INDICATED.
H. INSULATING GLASS UNITS:FACTORY ASSEMBLED UNITS CONSISTING OF SEALED LITES OF GLASS SEPARATED BY A DEHYDRATED INTERSPACE, QUALIFIED ACCORDING TO ASTM E 2190, AND COMPLYING WITH OTHER REQUIREMENTS SPECIFIED
I. DENSE COMPRESSION GASKETS: MOLDED OR EXTRUDED GASKETS OF PROFILE AND HARDNESS REQUIRED TO MAINTAIN WATERTIGHT SEAL.
J. SOFT COMPRESSION GASKETS: EXTRUDED OR MOLDED, CLOSED-CELL, INTEGRAL-SKINNED GASKETS COMPLYING WITH ASTM C 509, TYPE II, BLACK; OF PROFILE AND HARDNESS REQUIRED TO MAINTAIN WATERTIGHT SEAL.

NOAA group architects
4990 N Harbor Drive, Ste 201
San Diego, CA 92106
tel: 619-297-8066
web: www.noaainc.com

LICENSED ARCHITECT
No. C38046
REN 11/30/2023
STATE OF CALIFORNIA

DO NOT SCALE DRAWINGS.
ANY DISCREPANCIES TO BE REVIEWED WITH THE ARCHITECT.

SAN DIEGO FAMILY DERMATOLOGY
222 W. MADISON AVENUE
EL CAJON, CA 92020

REVISION SCHEDULE

Nº	DATE	ISSUE
1	07/06/2023	1ST CITY REVIEW
2	08/22/2023	2ND CITY REVIEW

Project No: BP-2023-0267
Project Start Date: Issue Date
Drawn: Designer
Checked: Checker
Revision:
Sheet Name:

GENERAL NOTES

Scale: 1/8" = 1'-0"
Sheet No:

A-011

8/25/2023 10:51:08 AM

K. GLAZING SEALANT: NEUTRAL-CURING SILICONE GLAZING SEALANT COMPLYING WITH ASTM C 920, TYPE S GRADE NS, CLASS 100/50, USE NT.
L. BACK-BEDDING MASTIC GLAZING TAPES: PERFORMED BUTYL-BASED, 100 PERCENT SOLIDS ELASTOMETRIC TAPE; NONSTAINING AND NONMIGRATING IN CONTACT WITH NONPOROUS SURFACES; WITH OR WITHOUT SPACER ROD AS RECOMMENDED IN WRITING BY TAPE AND GLASS MANUFACTURERS FOR APPLICATION INDICATED AND COMPLYING WITH ASTM C 1281 AND AAMA 800
M. EXPANDED CELLULAR GLAZING TAPES: CLOSED-CELL, PVC FOAM TAPES; FACTORY COATED WITH ADHESIVE ON BOTH SURFACES; AND COMPLYING WITH AAMA 800.
N. LOW-E-COATED, CLEAR INSULATING GLASS.
  a. OVERALL UNIT THICKNESS: 1 INCH (25 MM)
  b. THICKNESS OF GLASS LITE: 6.0 MM.
  c. INTERSPACE CONTENT: AIR.
  d. LOW-E COATING: PYROLITIC OR SPUTTERED ON SECOND OR THIRD SURFACE.
  e. PROVIDE SAFETY GLAZING LABELING WHERE TEMPERED GLASS INDICATED ON DRAWINGS.
O. INSTALLATION:
  a. COMPLY WITH COMBINED WRITTEN INSTRUCTIONS OF MANUFACTURERS OF GLASS, SEALANTS, GASKETS, AND OTHER GLAZING MATERIALS, UNLESS MORE STRINGENT REQUIREMENTS ARE INDICATED, INCLUDING THOSE IN REFERENCED GLAZING PUBLICATIONS.
  b. PROTECT EXTERIOR GLASS FROM DAMAGE IMMEDIATELY AFTER INSTALLATION BY ATTACHING CROSSED STREAMERS TO FRAMING HELD AWAY FROM GLASS. DO NOT APPLY MARKERS TO GLASS SURFACE . REMOVE NON-PERMANENT LABELS AND CLEAN SURFACES.
  c. PROTECT GLASS FROM CONTACT WITH CONTAMINATING SUBSTANCES RESULTING FROM CONSTRUCTION OPERATIONS. IF, DESPITE SUCH PROTECTION, CONTAMINATING SUBSTANCES DO COME INTO CONTACT WITH GLASS, REMOVE SUBSTANCES IMMEDIATELY AS RECOMMENDED IN WRITING BY GLASS MANUFACTURER.
  d. EXAMINE GLASS SURFACES ADJACENT TO OR BELOW EXTERIOR CONCRETE AND OTHER MASONRY SURFACES AT FREQUENT INTERVALS DURING CONSTRUCTION, BUT NOT LESS THAN ONCE A MONTH, FOR BUILD UP OF DIRT, SCUM, ALKALINE DEPOSITS, OR STAINS: REMOVE AS RECOMMENDED IN WRITING BY GLASS MANUFACTURER.
  e. REMOVE AND REPLACE GLASS THAT IS BROKEN, CHIPPED, CRACKED, OR ABRADED OR THAT IS DAMAGED FROM NATURAL CAUSES, ACCIDENTS AND VANDALISM, DURING CONSTRUCTION PERIOD.

DIVISION 9 FINISHES

9.1 NON-STRUCTURAL METAL FRAMING
A. FRAMING MEMBERS GENERAL: COMPLY WITH ASTM C 754 FOR CONDITIONS INDICATED.
B. STEEL SHEET COMPONENTS: COMPLY WITH ASTM C 645 REQUIREMENTS FOR METAL, UNLESS OTHERWISE INDICATED
C. PROTECTIVE COATING: MANUFACTURER'S STANDARDS CORROSION- RESISTANT ZINC COATING, UNLESS, UNLESS OTHERWISE INDICATED.
D. TIE WIRE: ASTM A 641/A 641M, CLASS 1 ZINC COATING, SOFT TEMPER, 0.0625-INCH- (1.59-MM-) DIAMETER WIRE, OR DOUBLE STRAND OF 0.0475-INCH-(1.21-MM-) DIAMETER WIRE
E. CARRYING CHANNELS: COLD-ROLLED, COMMERCIAL-STEEL SHEET WITH A BASE-METAL THICKNESS OF 0.0538 INCH (1.37 MM) AND MINIMUM 1/2-INCH- (12.7-MM-) WIDE FLANGES.
F. GRID SUSPENSION SYSTEM FOR CEILINGS: ASTM C 645, DIRECT-HUNG SYSTEM COMPOSED OF MAIN BEAMS AND CROSS-FURRING MEMBERS THAT INTERLOCK.
G. STEEL STUDS AND RUNNERS: ASTM C 645. MINIMUM BASE-METAL THICKNESS: 0.0179 INCH (0.45 MM).
H. SLIP-TYPE HEAD JOINTS: WHERE INDICATED, PROVIDE ONE OF THE FOLLOWING:
  a. DEFLECTION TRACK: STEEL SHEET TOP RUNNER MANUFACTURED TO PREVENT CRACKING OF FINISHES APPLIED TO INTERIOR PARTITION FRAMING RESULTING FROM DEFLECTION OF STRUCTURE ABOVE; IN THICKNESS NOT LESS THAN INDICATED FOR STUDS AND IN WIDTH TO ACCOMMODATE DEPTH OF STUDS.
I. FLAT STRAP AND BACKING PLATE: STEEL SHEET FOR BLOCKING AND BRACING IN LENGTH AND WIDTH INDICATED. MINIMUM BASE-META THICKNESS: 0.0179 INCH (0.45 MM)
J. COLD-ROLLED CHANNEL BRIDGING: 0.0538-INCH (1.37-MM) BARE STEEL THICKNESS, WITH MINIMUM 1/2-INCH- (12.7-MM-) WIDE FLANGES.
K. COLD-ROLLED FURRING CHANNELS: 0.0538-INCH (1.37-MM) BARE-STEEL THICKNESS, WITH MINIMUM 1/2-INCH- (12.7-MM-) WIDE FLANGES.
L. FASTENERS FOR METAL FRAMING: OF TYPE, MATERIAL, SIZE, CORROSION RESISTANCE, HOLDING POWER AND OTHER PROPERTIES REQUIRED TO FASTEN STEEL MEMBERS TO SUBSTRATES.
M. INSTALLATION STANDARD:: ASTM C 754.
  a. GYPSUM BOARD ASSEMBLIES: ALSO COMPLY WITH REQUIREMENTS IN ASTM C 840 THAT APPLY TO FRAMING INSTALLATION
N. SUSPEND HANGERS FROM BUILDING STRUCTURE AS FOLLOWS:
  a. INSTALL HANGERS PLUMB AND FREE FROM CONTACT WITH INSULATION OR OTHER OBJECTS WITH CEILING PLENUM THAT ARE NOT PART OF SUPPORTING STRUCTURAL OR SUSPENSION SYSTEM
  b. SPLAY HANGERS ONLY WHERE REQUIRED TO MISS OBSTRUCTIONS AND OFFSET RESULTING HORIZONTAL FORCES BY BRACING, COUNTER SPLAYING, OR OTHER EQUALLY EFFECTIVE MEANS.
  c. WHERE WIDTH OF DUCTS AND OTHER CONSTRUCTION WITHIN CEILING PLENUM PROCEDURES HANGER SPACING THAT INTERFERE WITH LOCATIONS OF HANGERS REQUIRED TO SUPPORT STANDARD SUSPENSION SYSTEM MEMBERS, INSTALL SUPPLEMENTAL SUSPENSION MEMBERS AND HANGERS IN THE FORM OF TRAPEZES OR EQUIVALENT DEVICES.
  d. DO NOT ATTACH HANGERS TO STEEL ROOF DECK.
  e. DO NOT ATTACH HANGERS TO PERMANENT METAL FORMS FURNISH CAST-IN-PLACE HANGER INSERTS THAT EXTEND THROUGH FORMS.
  f. DO NOT ATTACH HANGERS TO ROLLED-IN HANGER TABS OF COMPOSITE STEEL FLOOR DECK
  g. DO NOT CONNECT OR SUSPEND STEEL FRAMING FROM DUCTS, PIPES, OR CONDUIT.
O. SEISMIC BRACING:SWAY-BRACE SUSPENSION SYSTEMS WITH HANGERS USED FOR SUPPORT.
P. GRID SUSPENSION SYSTEMS: ATTACH PERIMETER WALL TRACK OR ANGLE WHERE GRID SUSPENSION SYSTEMS MEET VERTICAL SURFACES. MECHANICALLY JOIN MAIN BEAM AND CROSS-FURRING MEMBERS TO EACH OTHER AND BUTT-CUT TO FIT INTO WALL TRACK.
Q. WHERE STUDS ARE INSTALLED DIRECTLY AGAINST EXTERIOR MASONRY WALLS OR DISSIMILAR METALS AT EXTERIOR WALLS, INSTALL ISOLATION STRIP BETWEEN STUDS AND EXTERIOR WALL.
R. INSTALL TRACKS (RUNNERS) AT FLOORS AND OVERHEAD SUPPORT. EXTEND FRAMING FULL HEIGHT TO STRUCTURAL SUPPORTS OR SUBSTRATES ABOVE SUSPENDED CEILING, EXCEPT WHERE PARTITIONS ARE INDICATED TO TERMINATE AT SUSPENDED CEILING. CONTINUE FRAMING AROUND DUCTS PENETRATING PARTITIONS ABOVE CEILING.
S. SLIP-TYPE HEAD JOINTS: WHERE FRAMING EXTENDS TO OVERHEAD STRUCTURAL SUPPORTS, INSTALL TO PRODUCE JOINTS AT TOPS OF FRAMING SYSTEMS THAT PREVENT AXIAL LOADING OF FINISHED ASSEMBLIES.

9.3 GYPSUM WALLBOARD
A. GENERAL: COMPLYING WITH ASTM C 36/C 36M OR ASTM C 1396/C 1396M, AS APPLICABLE TO TYPE OF GYPSUM BOARD INDICATED AND WHICHEVER IS MORE STRINGENT.
B. REGULAR TYPE THICKNESS: 5/8 INCH (15.9 MM), TYPE X. LONG EDGES TAPERED.
C. MOISTURE-AND MOLD-RESISTANT TYPE: WITH MOISTURE- AND MOLD-RESISTANT CORE AND SURFACES. CORE 5/8 INCH (15.9 MM), TYPE X. LONG EDGES. TAPERED.
D. INTERIOR TRIM : ASTM C 1047.
E. JOINT TREATMENT: COMPLY WITH ASTM C 475/C 575M.
F. JOINT TAPE:
  a. INTERIOR GYPSUM WALLBOARD: PAPER
  b. TILE BACKING PANELS: AS RECOMMENDED BY PANEL MANUFACTURER
G. JOINT COMPOUND FOR INTERIOR GYPSUM WALLBOARD: FOR EACH COAT USE FORMULATION THAT IS COMPATIBLE WITH OTHER COMPOUND APPLIED ON PREVIOUS OR FOR SUCCESSIVE COATS.
H. JOINT COMPOUND FOR TILE BACKING PANELS: WATER-RESISTANT GYPSUM BACKING BOARD: USE SETTING-TYPE TAPING COMPOUND AND SETTING-TYPE, SANDABLE TOPPING COMPOUND.
I. JOINT COMPOUND FOR CEMENTITIOUS BACKER UNITS: AS RECOMMENDED BY BACKER UNIT MANUFACTURER.
J. STEEL DRILL SCREWS:ASTM C 1002, UNLESS OTHERWISE INDICATED.
K. APPLYING AND FINISHING PANELS, GENERAL:
  a. COMPLY WITH ASTM C 840.
  b. CEMENTITIOUS BACKER UNITS: ANSI A108.1 AT LOCATIONS INDICTED TO RECEIVE TILE.
L. GYPSUM BOARD FINISH LEVELS: FINISH PANELS TO LEVELS INDICATED BELOW:
  a. LEVEL 1: CEILING PLENUM AREAS CONCEALED ARES, AND WHERE INDICATED.
  b. LEVEL 2: PANELS THAT ARE SUBSTRATE FOR TILE
  c. LEVEL 4: AT PANEL SURFACES THAT WILL BE EXPOSED TO VIEW, UNLESS OTHERWISE INDICATED.

9.4 TILING
A. PROVIDE SAMPLES FOR EACH TYPE AND COMPOSITION OF TILE AND FOR EACH COLOR AND FINISH REQUIRED
B. ANSI CERAMIC TILE STANDARD: PROVIDE STANDARD GRADE TILE THAT COMPLIES WITH ANSI A137.1 FOR TYPES, COMPOSITIONS, AND OTHER CHARACTERISTICS INDICATED.
C. PORTLAND CEMENT MORTAR (THICKSET) INSTALLATION MATERIALS: ANSI A108.02.
D. LATEX-PORTLAND CEMENT MORTAR (THIN SET): ANSI 118.4.
E. TROWEABLE UNDERLAYMENT AND PATCHING COMPOUNDS: LATEX MODIFIED, PORTLAND CEMENT-BASED FORMULATION PROVIDED OR APPROVED BY MANUFACTURER OF TILE-SETTING MATERIALS FOR INSTALLATIONS INDICATED.
F. GROUT: SEE A6.1 FOR MORE INFORMATION
  a. BOSTICK DIAMOND GROUT OR APPROVED EQUAL-USE FOR WALL TILE AND CASEWORK TILE
  b. TEC: FOR FLOOR TILE
G. GROUT SEALER: MANUFACTURER'S STANDARD SILICONE PRODUCT FOR SEALING GROUT JOINTS AND THAT DOES NOT CHANGE THE COLOR OR APPEARANCE OF GROUT.
H. COMPLY WITH TCA'S "HANDBOOK FOR CERAMIC TILE INSTALLATION" FOR TCA INSTALLATION METHODS SPECIFIED IN TILE INSTALLATION SCHEDULES. COMPLY WITH PARTS OF THE ANSI A108 SERIES "SPECIFICATIONS FOR INSTALLATION OF CERAMIC TILE" THAT ARE REFERENCED IN TCA INSTALLATION METHODS SPECIFIED IN TILE INSTALLATION SCHEDULES, AND APPLY TO TYPES OF SETTING AND GROUTING MATERIALS USED.

9.5 CARPET SYSTEM
A. ALL CARPET INSTALLED IN THE BUILDING INTERIOR SHALL MEET AT LEAST ONE OF THE FOLLOWING TESTING AND PRODUCT REQUIREMENTS WHICH ARE LISTED IN SECTION 5.504.4.4 OF CAL GREEN.
  a. CARPET AND RUG INSTITUTES' GREEN LABEL PLUS PROGRAM
  b. COMPLIANT WITH VOC-EMISSION LIMITS AND TESTING REQUIREMENTS SPECIFIED IN THE CALIFORNIA DEPARTMENT OF PUBLIC HEALTH STANDARD METHOD FOR TESTING AND EVALUATION OF VOLATILE ORGANIC CHEMICAL EMISSION FROM INDOOR SOURCES USING ENVIRONMENTAL CHAMBERS, VERSION 1.1, FEBRUARY 2010.
  c. NSF/ANSI 140 AT THE GOLD LEVEL OR HIGHER
  d. SCIENTIFIC CERTIFICATION SYSTEMS SUSTAINABLE CHOICE
  e. COMPLIANCE WITH THE CALIFORNIA COLLABORATIVE FOR HIGH PERFORMANCE SCHOOLS (CA-CHPS) CRITERIA INTERPRETATION FOR EQ 2.2 DTED JULY 2012 AND LISTED IN THE CHPS HIGH PERFORMANCE PRODUCT DATABASE.
B. ALL CARPET CUSHION INSTALLED IN THE BUILDING INTERIOR. INTERIOR SHALL MEET REQUIREMENTS OF THE CARPET AND THE RUG INSTITUTE GREEN LABEL PROGRAM. ALL CARPET ADHESIVE SHALL MEET THE REQUIREMENTS OF TABLE 804.4.1. A LETTER FROM THE INSTALLER CERTIFYING COMPLIANCE MUST BE SUBMITTED TO THE BUILDING INSPECTOR.

9.6 RESILIENT SHEET FLOORING
A. VINYL SHEET FLOOR COVERING:
  a. RECYCLED PVC SAFETY FLOORING: ASTM E-648, 0.250 INCH THICK.
B. HARDNESS: MANUFACTURER'S STANDARDS HARDNESS, MEASURED USING SHORE, TYPE A DUROMETER PER ASTM D 2583.
C. WEARING SURFACE: AS SELECTED MANUFACTURER'S FULL RANGE.
D. SHEET WIDTH: AS STANDARD WITH MANUFACTURER
E. COLORS AND PATTERNS: PEWTER
F. ADHESIVES: WATER RESISTANT TYPE RECOMMENDED BY MANUFACTURER. TO SUIT FLOOR COVERING AND SUBSTRATE CONDITIONS INDICATED
G. INTEGRAL-FLASH-COVE-BASE ACCESSORIES:
  a. COVE STRIP:3/4 INCH RADIUS PROVIDED OR APPROVED BY MANUFACTURER
  b. CAP STRIP: SQUARE METAL, VINYL OR RUBBER CAP PROVIDED OR APPROVED BY MANUFACTURER.
  c. CORNERS: METAL INSIDE AND OUTSIDE CORNERS AND END STOPS PROVIDED OR APPROVED BY MANUFACTURERS
H. PREPARE SUBSTRATES ACCORDING TO MANUFACTURER'S WRITTEN INSTRUCTIONS TO ENSURE ADHESION OF FLOOR COVERINGS
I. DO NOT INSTALL FLOOR COVERINGS UNTIL THEY ARE THE SAME TEMPERATURE AS SPACE WHERE THEY ARE TO BE INSTALLED.
J. COMPLY WITH MANUFACTURERS WRITTEN INSTRUCTIONS FOR INSTALLING FLOOR COVERINGS
K. INTEGRAL-FLASH-COVE BASE: COVE FLOOR COVERING 6 INCHES (152MM) OR DIMENSION INDICATED UP VERTICAL SURFACES. SUPPORT FLOOR COVERINGS AT HORIZONTAL AND VERTICAL JUNCTION BY COVE STRIP. BUTT AT TOP AGAINST CAP STRIP. INSTALL METAL CORNERS AT INSIDE AND OUTSIDE CORNERS.
L. FLOOR POLISH: REMOVE SOIL ,VISIBLE ADHESIVE, AND SURFACE BLEMISHES FROM FLOOR COVERING BEFORE APPLYING LIQUID FLOOR POLISH. APPLY THREE COATS.
M. QUALITY ASSURANCE:
  a. ECO-GRIP MATERIALS AND INSTALLATION TO CONFORM TO ASTM STANDARDS GOVERNING RESILIENT FLOOR COVERING PARTS, NAMELY: C1355; C1381; AND C1467 INCLUDING PHYSICAL PROPERTIES AND TOLERANCES.
  b. MANUFACTURERS QUALIFICATIONS: MANUFACTURER SHALL HAVE A MINIMUM OF FIVE YEARS EXPERIENCE HAVING SUCCESSFUL SUPPLIED ECO-GRIP FLOORING PARTS FOR OTHER PROJECTS SIMILAR IN SCOPE AND COMPLEXITY AS FOR THE WORK OF THIS CONTRACT.
  c. INSTALLER QUALIFICATIONS: INSTALLER SHALL HAVE A MINIMUM OF THREE YEARS EXPERIENCE HAVING SUCCESSFULLY INSTALLED ECO-GRIP FLOORING PARTS FOR OTHER PROJECTS SIMILAR IN SCOPE AND COMPLEXITY FOR THE WORK OF THIS CONTRACT.
  d. SUBSTRATES TO ACCEPT ECO-GRIP FLOORING SHALL BE INSTALLED USING MINIMUM 3000 PSI. CONCRETE OR BETTER AND SHALL BE FREE OF OBSTRUCTION AND INFERENCE THAT PROHIBITS THE CORRECT INSTALLATION OF THE ECO-GRIP FLOORING SYSTEM.

9.7 RESILIENT FLOORING SYSTEM
A. AT LEAST 80% OF THE FLOOR AREA RECEIVING RESILIENT FLOORING SHALL MEET ONE OF THE FOLLOWING CRITERIA
  a. CERTIFIED UNDER THE RESILIENT FLOOR COVERING INSTITUTE (RFCI) FLOOR SCORE PROGRAM
  b. COMPLIANT WITH THE VOC-EMISSION LIMITS AND TESTING REQUIREMENTS SPECIFIED IN THE CALIFORNIA DEPARTMENT OF PUBLIC HEALTH'S 2010 STANDARD METHOD FOR TESTING AND EVALUATION CHAMBERS, VERSION 1.1 FEBRUARY 2010.
  c. COMPLIANT WITH THE CALIFORNIA COLLABORATIVE FOR HIGH PERFORMANCE SCHOOLS (CA-CHPS) CRITERIA INTERPRETATION FOR EQ 2.2 DATED JULY 2012 AND LISTED IN THE CHPS HIGH PERFORMANCE PRODUCT DATA BASE.
  d. PRODUCTS CERTIFIED UNDER THE UL GREENGUARD GOLD.
  e. COMPLIANT WITH CDPH CRITERIA AS CERTIFIED UNDER THE GREENGUARD CHILDRENS AND SCHOOL PROGRAM.

9.8 ACOUSTICAL PANEL CEILINGS
A. SURFACE-BURNING CHARACTERISTICS: ACOUSTICAL PANELS COMPLYING WITH ASTM E 1264 FOR CLASS A MATERIALS, WHEN TESTED PER ASTM E 84.
B. SEISMIC STANDARD: COMPLY WITH CISCA'S "GUIDELINES FOR SEISMIC RESTRAINT OF DIRECT HUNG SUSPENDED CELING ASSEMBLIES--SEISMIC ZONES 3 AND 4 AND ASCE 7 . "MINIMUM DESIGN LOADS FOR BUILDINGS AND OTHER STRUCTURES": SECTION 9, "EARTHQUAKE LOADS"
C. ACOUSTICAL PANEL STANDARD: COMPLY WITH ASTM E 1264
D. METAL SUSPENSION SYSTEM STANDARD: COMPLY WITH ASTM C 635
E. ATTACHMENT DEVICES:SIZE FOR 5 TIMES THE DESIGN LOAD INDICATED IN ASTM C 635, TABLE 1, DIRECT HUNG, UNLESS OTHERWISE INDICATED. COMPLY WITH SEISMIC DESIGN REQUIREMENTS
F. WIRE HANGERS, BRACES, AND TIES: ZINC COATED CARBON-STEEL WIRE; ASTM A 641/A 641M, CLASS 1 ZINC COATING, SOFT TEMPER.
G. METAL EDGE MOLDINGS AND TRIM:TYPE AND PROFILE INDICATED OR, IF NOT INDICATED, MANUFACTURER'S STANDARD MOLDINGS FOR EDGES AND PENETRATIONS THAT COMPLY WITH SEISMIC DESIGN REQUIREMENTS; FORMED FROM SHEET METAL OF SAME MATERIAL, FINISH AND COLOR AS THAT USED FOR EXPOSED FLANGES OF SUSPENSION SYSTEM RUNNERS.
H. LAY-IN PANELS FOR COMMERCIAL KITCHEN CEILING:SUBJECT TO COMPLIANCE WITH REQUIREMENTS, PROVIDE PRODUCTS FROM ONE OF THE FOLLOWING:
  a. ARMSTRONG WORLD INDUSTRIES, INC--KITCHEN ZONE
  b. OR APPROVED EQUIVALENT
I. TYPE AND FORM: TYPE IX, MINERAL BASE WITH SCRUBBABLE PIGMENT.
  a. COLOR: WHITE
  b. EDGE/JOINT DETAIL: SQUARE
  c. THICKNESS: 15/16 INCH.
  d. MODULAR SIZE: AS INDICATED ON DRAWINGS
J. DOUBLE-WEB, FIRE-RATED WHERE INDICATED, STEEL SUSPENSION SYSTEM: MAIN AND CROSS RUNNERS ROLL FORMED FROM COLD-ROLLED STEEL SHEET, PREPAINTED, ELECTROLYTICALLY ZINC COATED, OR HOT-DIP GALVANIZED ACCORDING TO ASTM A 635/A 653M, NOT LESS THAN G30 (Z90) COATING DESIGNATION, WITH PRE-FINISHED 15/16-INCH-(24-MM-) WIDE METAL CAPS ON FLANGES.
  a. STRUCTURAL CLASSIFICATION: HEAVY-DUTY SYSTEM
  b. CAP FINISH: PAINTED IN COLOR AS SELECTED FROM MANUFACTURER'S FULL RANGE
K. COMPLY WITH ASTM C 636 AND SEISMIC DESIGN REQUIREMENTS INDICATED PER MANUFACTURER'S WRITTEN INSTRUCTIONS AND CISCAS "CEILING SYSTEM HANDBOOK"
  a. SUSPEND CEILING HANGERS FROM BUILDINGS STRUCTURAL MEMBERS, PLUMB AND FREE FORM CONTACT WITH INSULATION OR OTHER OBJECTS WITHIN CEILING PLENUM. SPLAY HANGERS ONLY WHERE REQUIRED TO MISS OBSTRUCTIONS; OFFSET RESULTING HORIZONTAL FORCES BY BRACING , COUNTER SPLAYING OR OTHER EQUALLY EFFECTIVE MEANS
  b. WHERE WIDTH OF DUCTS AND OTHER CONSTRUCTION WITHIN CEILING PLENUM PRODUCES HANGER SPACING THAT INTERFERE WITH LOCATION OF HANGERS, USE TRAPEZES OR EQUIVALENT DEVICES.
L. INSTALL EDGE MOLDINGS AND TRIM OF TYPE INDICATION AT PERIMETER OF ACOUSTICAL CEILING AREA AND WHERE NECESSARY TO CONCEAL EDGES OF ACOUSTICAL PANELS. SCREW ATTACH MOLDINGS TO SUBSTRATE AT INTERVALS NOT MORE THAN 16 INCHES (400 MM) O.C AND NOT MORE THAN 3 INCHES (75 MM) FROM ENDS, LEVELING WITH CEILING SUSPENSION SYSTEM TO A TOLERANCE OF 1/8 INCH IN 12 FEET (3.2 MM IN 3.6 M) MITER CORNERS ACCURATELY AND CONNECT SECURELY
M. INSTALL SUSPENSION SYSTEM RUNNERS SO THEY ARE SQUARE AND SECURELY INTERLOCKED WITH ONE ANOTHER. REMOVE AND REPLACE DENTED, BENT OR KINKED MEMBERS.
N. INSTALL ACOUSTICAL PANELS WITH UNDAMAGED EDGES AND FIT ACCURATELY INTO SUSPENSION SYSTEM RUNNERS AND EDGE MOLDINGS. SCRIBE AND CUT PANELS AT BORDERS AND PENETRATIONS TO PROVIDE A NEAT, PRECISE FIT.

9.9 PAINTING (ASSUME ONE BASE AND TWO ACCENT COLORS)
A. MATERIAL COMPATIBILITY
  a. PROVIDE MATERIALS FOR USE WITHIN EACH PAINT SYSTEM THAT ARE COMPATIBLE WITH ONE ANOTHER AND SUBSTRATES INDICATED, UNDER CONDITIONS OF SERVICE AND APPLICATION AS DEMONSTRATED BY MANUFACTURER, BASED ON TESTING AND FIELD EXPERIENCE.
  b. FOR EACH COAT IN A PAINT SYSTEM, PROVIDE PRODUCTS RECOMMENDED IN WRITING BY MANUFACTURER'S OF TOP COAT FOR USE IN PAINT SYSTEM AND ON SUBSTRATE INDICATED.
B. COLORS: SEE FINISH SCHEDULE
C. ALLOW FOR AT LEAST 50% DEEP TONE OR ACCENT COLORS IN PAINTED AREAS.
D. SHEEN: SEE FINISH SCHEDULE
E. SUBMITTALS:
  a. SUBMIT PRODUCT MSDS AND PRODUCT DATA SHEETS
  b. SUBMIT DRAW DOWNS TO ARCHITECT FOR COLOR VERIFICATION
F. COMPLY WITH ALL LOCAL AND STATE ORDINANCES REGARDING VOC CONTENT OF PRODUCTS FOR INDOOR AND OUTDOOR APPLICATIONS
G. PAINT ALL EXPOSED FACES OF ELECTRICAL AND MECHANICAL ITEMS IN PAINTED AREAS INCLUDING PANEL BOXES, EXPOSED DUCTWORK, EXPOSED PIPING, ETC
H. MAXIMUM MOISTURE CONTENT OF SUBSTRATES:WHEN MEASURED WITH AN ELECTRONIC MOISTURE METER AS FOLLOWS
  a. WOOD: 15%
  b. GYPSUM BOARD: 12%
I. VERIFY SUITABILITY OF SUBSTRATES, INCLUDING SURFACE CONDITIONS COMPATIBILITY WITH EXISTING FINISHES AND PRIMERS.
J. COMPLY WITH MANUFACTURER'S WRITTEN INSTRUCTIONS AND RECOMMENDATIONS IN "MPI ARCHITECTURAL PAINTING AND SPECIFICATIONS MANUAL" APPLICABLE TO SUBSTRATES AND PAINTING SYSTEMS INDICATED.
K. DIMENSION LUMBER SUBSTRATES, NONTRAFFIC SURFACES: LATEX OVER ALKYD PRIMER SYSTEM:
  a. PRIMER COAT: EXTERIOR ALKYD WOOD PRIMER
  b. INTERMEDIATE COAT:INTERIOR/EXTERIOR LATEX MATCHING TOPCOAT
  c. TOPCOAT: INTERIOR/EXTERIOR LATEX
L. STEEL SUBSTRATES: HIGH PERFORMANCE POLYURETHANE SYSTEM:
  a. PRIME COAT:PER TOPCOAT MANUFACTURERS SPECIFICATION
  b. INTERMEDIATE COAT: HIGH PERFORMANCE POLYURETHANE COATING MATCHING TOPCOAT
  c. TOPCOAT:HIGH PERFORMANCE POLYURETHANE COAT
M. GALVANIZED METAL-SUBSTRATES:ALKYD SYSTEM:
  a. PRIME COAT:PER TOPCOAT MANUFACTURERS SPECIFICATION
  b. INTERMEDIATE COAT:HIGH PERFORMANCE POLYURETHANE COATING MATCHING TOPCOAT
  c. TOPCOAT: EXTERIOR HIGH PERFORMANCE POLYURETHANE COAT
N. GYPSUM BOARD SUBSTRATES: LATEX SYSTEM:
  a. PRIME COAT:INTERIOR/EXTERIOR LATEX MATCHING TOPCOAT
  b. INTERMEDIATE COAT: INTERIOR/EXTERIOR LATEX MATCHING TOPCOAT
  c. TOPCOAT: INTERIOR EXTERIOR LATEX

9.10 PAINT--CAL GREEN
A. ARCHITECTURAL PAINTS AND COATINGS SHALL COMPLY WITH TABLE 5.504.3 UNLESS MORE STRINGENT LOCAL LIMITS APPLY (5.504.3. CAL GREEN)
B. AEROSOL PAINTS AND COATINGS SHALL MEET THE PRODUCT-- WEIGHTED MIR LIMITS FOR ROC IN SECTION 945229(A) (3) AND OTHER REQUIREMENTS, INCLUDING PROHIBITIONS ON USE OF TOXIC COMPOUNDS AND OZONE DEPLETING SUBSTANCES (CCR, TITLE 17, SECTION 94520). (SECTION 5.5.4.3 OF CAL GREEN)
C. A LETTER FROM THE CONTRACTOR AND OR BUILDING OWNER CERTIFYING WHAT PAINT HAS BEEN USED AND ITS COMPLIANCE WITH THE CODE MUST BE SUBMITTED TO THE BUILDING INSPECTOR.

DIVISION 10 SPECIALTIES

10.1 HIGH DENSITY POLYETHYLENE TOILET COMPARTMENTS
A. QUALITY ASSURANCE:
  a. SURFACE- BURNING CHARACTERISTICS: AS DETERMINED BY TESTING IDENTICAL PRODUCTS ACCORDING TO ASTM E 84 OR ANOTHER STANDARD ACCEPTABLE TO AUTHORITIES HAVING JURISDICTION, BY A QUALIFIED TESTING AGENCY. IDENTIFY PRODUCTS WITH APPROPRIATE MARKINGS OF APPLICABLE TESTING AGENCY.
  b. REGULATORY REQUIREMENTS: COMPLY WITH APPLICABLE PROVISIONS IN THE US ARCHITECTURAL AND TRANSPORTATION BARRIERS COMPLIANCE BOARDS "AMERICANS WITH DISABILITIES ACTS AND ARCHITECTURAL BARRIERS ACT ACCESSIBILITY GUIDELINES FOR BUILDINGS AND FACILITIES AND ICC/ANSI A117.1 FOR TOILET COMPARTMENTS DESIGNATED AS ACCESSIBLE.
B. HDC TOILET COMPARTMENTS:
  a. DOOR, PANEL, AND PILASTER CONSTRUCTION:
    • HIGH DENSITY POLYETHYLENE (HDPE), FABRICATED FROM EXTRUDED POLYMER RESINS, FORMING SINGLE THICKNESS PANEL
    • WATERPROOF AND NON-ABSORBENT, WITH SELF-LUBRICATION SURFACE, RESISTANT TO MARKS BY PENS, PENCILS, MARKERS AND OTHER WRITING INSTRUMENTS.
    • 1 INCH THICK WITH EDGES ROUNDED TO 1/4 INCH RADIUS
    • COLOR: LINES
C. HARDWARE AND ACCESSORIES:
  a. HINGES FABRICATED FROM HEAVY-DUTY CAST ALUMINUM, AUTO-CLOSE FEATURE ADJUSTABLE TO 15 DEGREE POSITION.
  b. LATCH AND HOUSING HEAVY DUTY EXTRUDED ALUMINUM, CLEAR ANODIZED FINISH.
  c. COAT HOOK AND NUMBER: COMBINATION TYPE, CHROME PLATED
  d. DOOR PULLS/ PUSH PLATES:HEAVY DUTY EXTRUDED ALUMINUM, CLEAR ANODIZED FINISH
D. DOOR SIZE AND SWINGS: UNLESS OTHERWISE INDICATED, PROVIDE 36-INCH- (610-MM-) WIDE, IN-SWINGING DOORS FOR STANDARD TOILET COMPARTMENTS AND 36-INCH- (914-MM-) WIDE, OUT-SWINGING DOORS WITH A MINIMUM 32-INCH- (813-MM-) WIDE, CLEAR OPENING FOR COMPARTMENTS DESIGNATED AS ACCESSIBLE.
  a. 72" HIGH DOORS MOUNTED 8" A.F.F .. DOORS TO HAVE 60 DEGREE ANGLE ON TWO OPPOSITE EDGES FOR ENHANCED PRIVACY.

9.8 ACOUSTICAL PANEL CEILINGS
A. SURFACE-BURNING CHARACTERISTICS: ACOUSTICAL PANELS COMPLYING WITH ASTM E 1264 FOR CLASS A MATERIALS, WHEN TESTED PER ASTM E 84.
B. SEISMIC STANDARD: COMPLY WITH CISCA'S "GUIDELINES FOR SEISMIC RESTRAINT OF DIRECT HUNG SUSPENDED CEILING ASSEMBLIES--SEISMIC ZONES 3 AND 4 AND ASCE 7 . "MINIMUM DESIGN LOADS FOR BUILDINGS AND OTHER STRUCTURES": SECTION 9, "EARTHQUAKE LOADS"
C. ACOUSTICAL PANEL STANDARD: COMPLY WITH ASTM E 1264
D. METAL SUSPENSION SYSTEM STANDARD: COMPLY WITH ASTM C 635
E. ATTACHMENT DEVICES:SIZE FOR 5 TIMES THE DESIGN LOAD INDICATED IN ASTM C 635, TABLE 1, DIRECT HUNG, UNLESS OTHERWISE INDICATED. COMPLY WITH SEISMIC DESIGN REQUIREMENTS
F. WIRE HANGERS, BRACES, AND TIES: ZINC COATED CARBON-STEEL WIRE; ASTM A 641/A 641M, CLASS 1 ZINC COATING, SOFT TEMPER.
G. METAL EDGE MOLDINGS AND TRIM:TYPE AND PROFILE INDICATED OR, IF NOT INDICATED, MANUFACTURER'S STANDARD MOLDINGS FOR EDGES AND PENETRATIONS THAT COMPLY WITH SEISMIC DESIGN REQUIREMENTS; FORMED FROM SHEET METAL OF SAME MATERIAL, FINISH AND COLOR AS THAT USED FOR EXPOSED FLANGES OF SUSPENSION SYSTEM RUNNERS.
H. LAY-IN PANELS FOR COMMERCIAL KITCHEN CEILING:SUBJECT TO COMPLIANCE WITH REQUIREMENTS, PROVIDE PRODUCTS FROM ONE OF THE FOLLOWING:
  a. ARMSTRONG WORLD INDUSTRIES, INC--KITCHEN ZONE
  b. OR APPROVED EQUIVALENT
I. TYPE AND FORM: TYPE IX, MINERAL BASE WITH SCRUBBABLE PIGMENT.
  a. COLOR: WHITE
  b. EDGE/JOINT DETAIL: SQUARE
  c. THICKNESS: 15/16 INCH.
  d. MODULAR SIZE: AS INDICATED ON DRAWINGS
J. DOUBLE-WEB, FIRE-RATED WHERE INDICATED, STEEL SUSPENSION SYSTEM: MAIN AND CROSS RUNNERS ROLL FORMED FROM COLD-ROLLED STEEL SHEET, PREPAINTED, ELECTROLYTICALLY ZINC COATED, OR HOT-DIP GALVANIZED ACCORDING TO ASTM A 635/A 653M, NOT LESS THAN G30 (Z90) COATING DESIGNATION, WITH PRE-FINISHED 15/16-INCH-(24-MM-) WIDE METAL CAPS ON FLANGES.
  a. STRUCTURAL CLASSIFICATION: HEAVY-DUTY SYSTEM
  b. CAP FINISH: PAINTED IN COLOR AS SELECTED FROM MANUFACTURER'S FULL RANGE
K. COMPLY WITH ASTM C 636 AND SEISMIC DESIGN REQUIREMENTS INDICATED PER MANUFACTURER'S WRITTEN INSTRUCTIONS AND CISCAS "CEILING SYSTEM HANDBOOK"
  a. SUSPEND CEILING HANGERS FROM BUILDINGS STRUCTURAL MEMBERS, PLUMB AND FREE FORM CONTACT WITH INSULATION OR OTHER OBJECTS WITHIN CEILING PLENUM. SPLAY HANGERS ONLY WHERE REQUIRED TO MISS OBSTRUCTIONS; OFFSET RESULTING HORIZONTAL FORCES BY BRACING , COUNTER SPLAYING OR OTHER EQUALLY EFFECTIVE MEANS
  b. WHERE WIDTH OF DUCTS AND OTHER CONSTRUCTION WITHIN CEILING PLENUM PRODUCES HANGER SPACING THAT INTERFERE WITH LOCATION OF HANGERS, USE TRAPEZES OR EQUIVALENT DEVICES.
L. INSTALL EDGE MOLDINGS AND TRIM OF TYPE INDICATION AT PERIMETER OF ACOUSTICAL CEILING AREA AND WHERE NECESSARY TO CONCEAL EDGES OF ACOUSTICAL PANELS. SCREW ATTACH MOLDINGS TO SUBSTRATE AT INTERVALS NOT MORE THAN 16 INCHES (400 MM) O.C AND NOT MORE THAN 3 INCHES (75 MM) FROM ENDS, LEVELING WITH CEILING SUSPENSION SYSTEM TO A TOLERANCE OF 1/8 INCH IN 12 FEET (3.2 MM IN 3.6 M) MITER CORNERS ACCURATELY AND CONNECT SECURELY
M. INSTALL SUSPENSION SYSTEM RUNNERS SO THEY ARE SQUARE AND SECURELY INTERLOCKED WITH ONE ANOTHER. REMOVE AND REPLACE DENTED, BENT OR KINKED MEMBERS.
N. INSTALL ACOUSTICAL PANELS WITH UNDAMAGED EDGES AND FIT ACCURATELY INTO SUSPENSION SYSTEM RUNNERS AND EDGE MOLDINGS. SCRIBE AND CUT PANELS AT BORDERS AND PENETRATIONS TO PROVIDE A NEAT, PRECISE FIT.

9.9 PAINTING (ASSUME ONE BASE AND TWO ACCENT COLORS)
A. MATERIAL COMPATIBILITY
  a. PROVIDE MATERIALS FOR USE WITHIN EACH PAINT SYSTEM THAT ARE COMPATIBLE WITH ONE ANOTHER AND SUBSTRATES INDICATED, UNDER CONDITIONS OF SERVICE AND APPLICATION AS DEMONSTRATED BY MANUFACTURER, BASED ON TESTING AND FIELD EXPERIENCE.
  b. FOR EACH COAT IN A PAINT SYSTEM, PROVIDE PRODUCTS RECOMMENDED IN WRITING BY MANUFACTURER'S OF TOP COAT FOR USE IN PAINT SYSTEM AND ON SUBSTRATE INDICATED.
B. COLORS: SEE FINISH SCHEDULE
C. ALLOW FOR AT LEAST 50% DEEP TONE OR ACCENT COLORS IN PAINTED AREAS.
D. SHEEN: SEE FINISH SCHEDULE
E. SUBMITTALS:
  a. SUBMIT PRODUCT MSDS AND PRODUCT DATA SHEETS
  b. SUBMIT DRAW DOWNS TO ARCHITECT FOR COLOR VERIFICATION
F. COMPLY WITH ALL LOCAL AND STATE ORDINANCES REGARDING VOC CONTENT OF PRODUCTS FOR INDOOR AND OUTDOOR APPLICATIONS
G. PAINT ALL EXPOSED FACES OF ELECTRICAL AND MECHANICAL ITEMS IN PAINTED AREAS INCLUDING PANEL BOXES, EXPOSED DUCTWORK, EXPOSED PIPING, ETC
H. MAXIMUM MOISTURE CONTENT OF SUBSTRATES:WHEN MEASURED WITH AN ELECTRONIC MOISTURE METER AS FOLLOWS
  a. WOOD: 15%
  b. GYPSUM BOARD: 12%
I. VERIFY SUITABILITY OF SUBSTRATES, INCLUDING SURFACE CONDITIONS COMPATIBILITY WITH EXISTING FINISHES AND PRIMERS.
J. COMPLY WITH MANUFACTURER'S WRITTEN INSTRUCTIONS AND RECOMMENDATIONS IN "MPI ARCHITECTURAL PAINTING AND SPECIFICATIONS MANUAL" APPLICABLE TO SUBSTRATES AND PAINTING SYSTEMS INDICATED.
K. DIMENSION LUMBER SUBSTRATES, NONTRAFFIC SURFACES: LATEX OVER ALKYD PRIMER SYSTEM:
  a. PRIMER COAT: EXTERIOR ALKYD WOOD PRIMER
  b. INTERMEDIATE COAT:INTERIOR/EXTERIOR LATEX MATCHING TOPCOAT
  c. TOPCOAT: INTERIOR/EXTERIOR LATEX
L. STEEL SUBSTRATES: HIGH PERFORMANCE POLYURETHANE SYSTEM:
  a. PRIME COAT:PER TOPCOAT MANUFACTURERS SPECIFICATION
  b. INTERMEDIATE COAT: HIGH PERFORMANCE POLYURETHANE COATING MATCHING TOPCOAT
  c. TOPCOAT:HIGH PERFORMANCE POLYURETHANE COAT
M. GALVANIZED METAL-SUBSTRATES:ALKYD SYSTEM:
  a. PRIME COAT:PER TOPCOAT MANUFACTURERS SPECIFICATION
  b. INTERMEDIATE COAT:HIGH PERFORMANCE POLYURETHANE COATING MATCHING TOPCOAT
  c. TOPCOAT: EXTERIOR HIGH PERFORMANCE POLYURETHANE COAT
N. GYPSUM BOARD SUBSTRATES: LATEX SYSTEM:
  a. PRIME COAT:INTERIOR/EXTERIOR LATEX MATCHING TOPCOAT
  b. INTERMEDIATE COAT: INTERIOR/EXTERIOR LATEX MATCHING TOPCOAT
  c. TOPCOAT: INTERIOR EXTERIOR LATEX

9.10 PAINT--CAL GREEN
A. ARCHITECTURAL PAINTS AND COATINGS SHALL COMPLY WITH TABLE 5.504.3 UNLESS MORE STRINGENT LOCAL LIMITS APPLY (5.504.3. CAL GREEN)
B. AEROSOL PAINTS AND COATINGS SHALL MEET THE PRODUCT-- WEIGHTED MIR LIMITS FOR ROC IN SECTION 945229(A) (3) AND OTHER REQUIREMENTS, INCLUDING PROHIBITIONS ON USE OF TOXIC COMPOUNDS AND OZONE DEPLETING SUBSTANCES (CCR, TITLE 17, SECTION 94520). (SECTION 5.5.4.3 OF CAL GREEN)
C. A LETTER FROM THE CONTRACTOR AND OR BUILDING OWNER CERTIFYING WHAT PAINT HAS BEEN USED AND ITS COMPLIANCE WITH THE CODE MUST BE SUBMITTED TO THE BUILDING INSPECTOR.

DIVISION 10 SPECIALTIES

10.1 HIGH DENSITY POLYETHYLENE TOILET COMPARTMENTS
A. QUALITY ASSURANCE:
  a. SURFACE- BURNING CHARACTERISTICS: AS DETERMINED BY TESTING IDENTICAL PRODUCTS ACCORDING TO ASTM E 84 OR ANOTHER STANDARD ACCEPTABLE TO AUTHORITIES HAVING JURISDICTION, BY A QUALIFIED TESTING AGENCY. IDENTIFY PRODUCTS WITH APPROPRIATE MARKINGS OF APPLICABLE TESTING AGENCY.
  b. REGULATORY REQUIREMENTS: COMPLY WITH APPLICABLE PROVISIONS IN THE US ARCHITECTURAL AND TRANSPORTATION BARRIERS COMPLIANCE BOARDS "AMERICANS WITH DISABILITIES ACTS AND ARCHITECTURAL BARRIERS ACT ACCESSIBILITY GUIDELINES FOR BUILDINGS AND FACILITIES AND ICC/ANSI A117.1 FOR TOILET COMPARTMENTS DESIGNATED AS ACCESSIBLE.
B. HDC TOILET COMPARTMENTS:
  a. DOOR, PANEL, AND PILASTER CONSTRUCTION:
    • HIGH DENSITY POLYETHYLENE (HDPE), FABRICATED FROM EXTRUDED POLYMER RESINS, FORMING SINGLE THICKNESS PANEL
    • WATERPROOF AND NON-ABSORBENT, WITH SELF-LUBRICATION SURFACE, RESISTANT TO MARKS BY PENS, PENCILS, MARKERS AND OTHER WRITING INSTRUMENTS.
    • 1 INCH THICK WITH EDGES ROUNDED TO 1/4 INCH RADIUS
    • COLOR: LINES
C. HARDWARE AND ACCESSORIES:
  a. HINGES FABRICATED FROM HEAVY-DUTY CAST ALUMINUM, AUTO-CLOSE FEATURE ADJUSTABLE TO 15 DEGREE POSITION.
  b. COAT HOOK AND NUMBER: COMBINATION TYPE, CHROME PLATED
  c. DOOR PULLS/ PUSH PLATES:HEAVY DUTY EXTRUDED ALUMINUM, CLEAR ANODIZED FINISH
D. DOOR SIZE AND SWINGS: UNLESS OTHERWISE INDICATED, PROVIDE 36-INCH- (610-MM-) WIDE, IN-SWINGING DOORS FOR STANDARD TOILET COMPARTMENTS AND 36-INCH- (914-MM-) WIDE, OUT-SWINGING DOORS WITH A MINIMUM 32-INCH- (813-MM-) WIDE, CLEAR OPENING FOR COMPARTMENTS DESIGNATED AS ACCESSIBLE.
  a. 72" HIGH DOORS MOUNTED 8" AFF DOORS TO HAVE 60 DEGREE ANGLE ON TWO OPPOSITE EDGES FOR ENHANCED PRIVACY.
E. COMPLY WITH MANUFACTURER'S WRITHEN INSTALLATION INSTRUCTIONS. INSTALL UNITS RIGID, STRAIGHT, LEVEL AND PLUMB. SECURE UNITS IN POSITION WITH MANUFACTURER'S RECOMMENDED ANCHORING DEVICES.
F. MANUFACTURERS: SCRANTON PRODUCTS - ECLIPSE OR APPROVED EQUIVALENT.

10.2 TOILET ACCESSORIES
A. SUBMIT PROPOSED PRODUCT SCHEDULE: IDENTIFY PRODUCTS USING DESIGNATIONS INDICATED ON DRAWINGS.
B. TOILET TISSUE (ROLL) DISPENSER:
  a. DESCRIPTION: BOBRICK 8-3888
  b. MOUNTING: PARTIALLY RECESSED
  c. OPERATION: NONCONTROL DELIVERY WITH THEFT-RESISTANT SPINDLE.
  d. MATERIAL AND FINISH: STAINLESS STEEL, NO. 4 FINISH (SATIN.
C. HAND DRYER:
  a. DESCRIPTION: TOTO CLEAN DRY HDR111 #SS
  b. MOUNTING: RECESSED
  c. MATERIAL AND FINISH: STAINLESS STEEL, NO. 4 FINISH (SATIN).
D. LIQUID-SOAP DISPENSER: TOTO TES OR APPROVED EQUIVALENT
  a. DESCRIPTION: DESIGNED FOR DISPENSING SOAP IN LIQUID OR LOTION FORM.
  b. MOUNTING: DECK
  c. REFILL INDICATOR: WINDOW TYPE.
E. GRAB BAR:
  a. MOUNTING: FLANGES WITH CONCEALED FASTENERS.
  b. MATERIAL: STAINLESS STEEL, 0.05 INCH (1.3 MM) THICK.
  c. FINISH: SMOOTH. NO. 4, SATIN FINISH.
  d. OUTSIDE DIAMETER: 1-1/4 INCHES (32 MM).
  e. CONFIGURATION AND LENGTH: AS INDICATED ON DRAWINGS.
F. SEAT-COVER DISPENSER: BOBRICK B-221
  a. MOUNTING: SURFACE MOUNTED.
  b. EXPOSED MATERIAL AND FINISH: STAINLESS STEEL, NO. 4 FINISH (SATIN).
  c. LOCKSET: TUMBLER TYPE,
G. MIRROR UNIT:
H. UNDER LAVATORY GUARD:
  a. DESCRIPTION: INSULATING PIPE COVERING FOR SUPPLY AND DRAIN PIPING ASSEMBLIES, THAT PREVENT DIRECT CONTACT WITH AND BURNS FROM PIPING, AND ALLOW SERVICE ACCESS WLLL-LOUT REMOVING COVERINGS.
  b. MATERIAL AND FINISH: ANTIMICROBIAL, MOLDED-PLASTIC, WHITE.
I. TRASH RECEPTACLE: BOBRICK B-3644
  a. MOUNTING: PARTIALLY RECESSED
  b. EXPOSED MATERIAL & FINISH: STAINLESS STEEL, NO. 4 FINISH (SATIN)
  c. LOCKSET: TUMBLER TYPE
J. SANITARY NAPKIN DISPOSAL: BOBRICK 8-3513
  a. MOUNTING: RECESSED
  b. EXPOSED MATERIAL & FINISH: STAINLESS STEEL, NO. 4 FINISH (SATIN)
  c. LOCKSET: TUMBLER TYPE
K. INSTALL ACCESSORIES ACCORDING TO MANUFACTURERS' WRITTEN INSTRUCTIONS, USING FASTENERS

10.3 FIRE EXTINGUISHER AND CABINETS
A. SUBMIT PRODUCT DATA: FOR EACH TYPE OF PRODUCT INDICATED.
B. SUBMIT SHOP DRAWINGS: FOR FIRE PROTECTION CABINETS. INCLUDE PLANS, ELEVATIONS
C. QUALITY ASSURANCE:
  a. FIRE-RATED. FIRE PROTECTION CABINETS: LISTED AND LABELED TO COMPLY WITH REQUIREMENTS IN ASTM E 814 FOR FIRE-RESISTANCE RATING OF WALLS WHERE THEY ARE INSTALLED
  b. NFPA COMPLIANCE: FABRICATE AND LABEL FIRE EXTINGUISHERS TO COMPLY WITH NFPA 10, "PORTABLE FIRE EXTINGUISHERS."
  c. FIRE EXTINGUISHERS: LISTED AND LABELED FOR TYPE, RATING, AND CLASSIFICATION BY AN INDEPENDENT TESTING AGENCY ACCEPTABLE TO AUTHORITIES HAVING JURISDICTION.
D. COORDINATE TYPE AND CAPACITY OF FIRE EXTINGUISHERS WITH FIRE PROTECTION CABINETS TO ENSURE FIT AND FUNCTION.
E. CABINET CONSTRUCTION: NONRATED EXCEPT WHERE INDICATED TO BE MOUNTED IN FIRE RATED ASSEMBLY.
  a. FIRE-RATED CABINETS: CONSTRUCT FIRE-RATED CABINETS WITH DOUBLE WALLS FABRICATED FROM 0.0428-INCH- (1.1-MM-) THICK, COLD-ROLLED STEEL SHEET LINED WITH MINIMUM 5/8-INCH-(16-MM-) THICK, FIRE-BARRIER MATERIAL. PROVIDE FACTORY-DRILLED MOUNTING HOLES.
  b. SEMIRECESSED CABINET: CABINET BOX PARTIALLY RECESSED IN WALLS OF SUFFICIENT DEPTH TO SUIT STYLE OF TRIM INDICATED; WITH ONE-PIECE COMBINATION TRIM AND PERIMETER DOOR FRAME OVERLAPPING SURROUNDING WALL SURFACE V/ITH EXPOSED TRIM FACE AND WALL RETURN AT OUTER EDGE (BACKBEND). PROVIDE WHERE WALLS ARE OF INSUFFICIENT DEPTH FOR RECESSED CABINETS BUT ARE OF SUFFICIENT DEPTH TO ACCOMMODATE SEMIRECESSED CABINET INSTALLATION.
F. DOOR MATERIAL: STAINLESS-STEEL SHEET.
G. DOOR STYLE: FULLY GLAZED PANEL WITH FRAME.
  a. DOOR GLAZING: TEMPERED FLOAT GLASS (CLEAR).
  b. DOOR HARDWARE:MANUFACTURERS STANDARD DOOR HARDWARE OF PROPER TYPE FOR CABINET TYPE, TRIM STYLE AND DOOR MATERIAL.
H. MULTIPURPOSE DRY-CHEMICAL TYPE FIRE EXTINGUISHERS: UL-RATED WITH MONOAMMONIUM PHOSPHATE-BASED DRY CHEMICAL IN MANUFACTURER'S STANDARD ENAMELED CONTAINER.
I. MOUNTING BRACKET; MANUFACTURER'S STANDARD STEEL, DESIGNED TO SECURE FIRE EXTINGUISHER TO FIRE PROTECTION CABINET, OF SIZES REQUIRED FOR TYPES AND CAPACITIES OF FIRE EXTINGUISHERS INDICATED, WITH PLATED OR BAKED-ENAMEL FINISH.
J. IDENTIFICATION: LETTERING COMPLYING WITH AUTHORITIES HAVING JURISDICTION FOR LETTER STYLE, SIZE, SPACING, AND LOCATION.
  a. IDENTIFY FIRE EXTINGUISHER IN FIRE PROTECTION CABINET WITH THE WORDS "FIRE EXTINGUISHER."
K. FIRE PROTECTION CABINETS: PROVIDE MANUFACTURER'S STANDARD BOX (TUB), WITH TRIM, FRAME, DOOR, AND HARDWARE TO SUIT CABINET TYPE, TRIM STYLE, AND DOOR STYLE INDICATED. MITER AND WELD JOINTS AND GRIND SMOOTH.
  a. EXPOSED FINISHES: STAINLESS STEEL NO. 4 UNLESS NOTED OTHERWISE.
L. EXAMINE WALLS AND PARTITIONS FOR SUITABLE FRAMING DEPTH AND BLOCKING WHERE SEMIRECESSED CABINETS WILL BE INSTALLED AND PREPARE RECESSES AS REQUIRED BY TYPE AND SIZE OF CABINET AND TRIM STYLE.
M. INSTALL FIRE PROTECTION CABINETS AND FIRE EXTINGUISHERS IN LOCATIONS AND AT MOUNTING HEIGHTS AT HEIGHTS ACCEPTABLE TO AUTHORITIES HAVING JURISDICTION AND AS INDICATED ON THE DRAWINGS.
  a. MOUNTING BRACKETS: 54 INCHES ABOVE FINISHED FLOOR TO TOP OF FIRE EXTINGUISHER.

10.4 SIGNAGE
A. PROVIDE ONE TOILET ROOM SIGN AT EACH DOOR TO TOILET ROOM WITH INTERNATIONAL SYMBOL FOR ACCESSIBILITY IN ACCORDANCE WITH ANSI 117.1 AND CALIFORNIA STATE CODE.

DIVISION 21 FIRE SUPPRESSION

21.1 FIRE PROTECTION
A. ALL FIRE SUPPRESSION WORK SHALL BE DESIGN BUILT, BY SEPARATE PERMIT. ALL WORK SHALL BE DESIGNED IN ACCORDANCE WITH ALL APPLICABLE CODES AND STANDARDS.
B. THE DESIGN-BUILD FIRE SUPPRESSION CONTRACTOR SHALL FURNISH AND INSTALL A COMPLETE AND OPERATIVE ELECTRICAL SYSTEM.
C. FIRE SUPPRESSION USB-CONTRACTOR IS RESPONSIBLE FOR OBTAINING ALL REQUIRED APPROVALS AND PURCHASING PERMITS FOR THE WORK PROVIDED UNDER THIS SECTION.

DIVISION 21 PLUMBING

22.1 GENERAL
A. SEE PLUMBING DRAWINGS FOR MORE INFORMATION.
B. FIXTURES: SPECIFIED OR APPROVED EQUIVALENT
  a. LAVATORY:
    • MANUFACTURE: EKO LIVING ELEGANCE, LLC
    • MODEL: EKOIS-COM, INCLINE COUNTERSINK
    • STYLE: TROUGH
    • FINISH: EKOLI I VPTK
    • COLOR: EKOPURE-TITANIUM-WHITE
    • FAUCET MOUNTING: DECK-MOUNTED TOTO TEC 123
  b. TOILET:
    • MANUFACTURE: TOTO MODEL T705ELN(G)
    • TYPE: FLOOR MOUNT FLUSH-0-METER
    • COLOR: WHITE
  c. URINAL:
    • MANUFACTURE: TOTAL MODEL UT445U(V)
    • COLOR: WHITE

ENVIRONMENTAL HEALTH NOTES

1. THE FOLLOWING ENVIRONMENTAL HEALTH NOTES ARE TO ASSIST IN PROVIDING CLEAR DIRECTIONS BETWEEN THOSE INVOLVED IN THE ACTUAL CONSTRUCTION OF A FOOD FACILITY INCLUDING CONTRACTOR AND ENVIRONMENTAL HEALTH SPECIALIST.
  A. A CONCRETE SLAB IS PROVIDED FOR TRASH, GARBAGE, AND GREASE CONTAINER. IF WALL ENCLOSE AREA, THE INTERIOR WALL SURFACE WILL BE SMOOTH, SEALED AND WASHABLE.
  B. ALL FOOD RELATED AND UTENSIL RELATED EQUIPMENT SHALL BE EQUIVALENT TO SANITATION STANDARDS ESTABLISHED BY AN ANSI ACCREDITED PROGRAM
  C. ALL FLOOR MOUNTED EQUIPMENT SHALL BE INSTALLED ON A MINIMUM 6" SANITARY LEG CASTOR OR COMPLETELY SEALED POSITION ON A 4" HIGH CURB WITH A CONTINUOUS COVED BASE. COUNTERTOP EQUIPMENT WILL BE ON 4" SANITARY LEGS OR SEALED TO THE COUNTER UNLESS READILY MOVABLE.
  D. ANY OPERABLE WINDOW VENTS OPENING OR OTHER SIMILAR OPENING MUST BE PROVIDED WITH TIGHT FITTING SCREENS OF MINIMUM 16--MESH TO THE INCH. WINDOWS TO BE FIXED AT FOOD PREP, UTENSIL WASHING, OR UNPACKED FOOD AND UTENSIL STORAGE AREA.
  E. ALL EXTERIOR DOOR OPEN OUTWARD AND ARE SELF CLOSING.
  F. BI· FOLD, FRENCH, ACCORDION STYLE AND ROLL UP DOOR CANNOT OPEN INTO THE FOOD PREP, UTENSIL WASHING OR UNPACKED FOOD SERVICE AREAS.
  G. TOILET ROOMS AND DRESSING ROOM DOORS TO BE SELF CLOSING, TIGHT FITTING.
  H. DELIVERY DOORS TO HAVE AIR CURTAIN FANS THAT SPAN THE WIDTH OF THE DOOR. THE FAN MUST ACTIVATE VIA A MICROSWITCH PROVIDING A MINIMUM VELOCITY OF 1600 FPM MEASURE 3 FEET ABOVE THE GROUND.
  I. A MINIMUM OF 10 FOOT-CANDLES OF LIGHT MEASURED 30" OFF FLOOR IS PROVIDED IN WALK-IN REFRIGERATED STORAGE AND DRY STORAGE ROOMS AND AT LEAST 20-FOOT CANDLES IS PROVIDED FOR CONSUMER SELF SERVICE, WHERE FRESH PRODUCE OR PREPACKAGED FOODS ARE SOLD OR OFFERED FOR CONSUMPTION; INSIDE EQUIPMENT SUCH AS REACH-IN AND UNDER-COUNTER REFRIGERATOR; IN AREAS USED FOR HANDWASHING, WAREWASHING, EQUIPMENT AND UTENSIL STORAGE, AND IN TOILET ROOMS.
  J. A MINIMUM OF 50-FOOR CANDLES OF LIGHT MEASURE 30" OFF FLOOR IS PROVIDED WHEN WORKING WITH FOOD OR WORKING WITH UTENSILS OR EQUIPMENT SUCH AS KNIVES, SLICERS, GRINDERS, OR SAW WHERE EMPLOYEE SAFETY IS A FACTOR AND IN ALL AREAS DURING PERIODS OF CLEANING.
  K. SHATTERSHIELD FOR ALL LIGHTS ABOVE FOOD PREPARATION, WORK AND STORAGE AREAS WILL BE PROVIDED.
  L. ALL WAREWASHING SINKS TO HAVE 3 COMPARTMENTS THAT ARE A MINIMUM SIZE OF AT LEAST 18"X18"X12" DEEP (OR 16"X20"X12" DEEP) WITH A MINIMUM 18" DRAIN BOARD AT EACH END. IF AGAINST THE WALL, IT MUST HAVE AN 8" INTEGRAL BACKSPLASH. HOWEVER, IT MUST BE CAPABLE OF ACCOMMODATING THE LARGEST UTENSIL TO BE WASHED. A WAREWASHING MACHINE DOES NOT SUBSTITUTE FOR THE SINK REQUIREMENT.
  M. SINKS TO HAVE SPOUT(S) CAPABLE OF REACHING EACH COMPARTMENT.
  N. FOOD PREP SINK COMPARTMENT(S) TO BE AT LEAST 18"X 18"X 12" DEEP (OR 16"X20"X 12" DEEP) WITH A MINIMUM 18" DRAINBOARD AT EACH END.
  O. THE 3 OR 4 COMPARTMENT BAR SINK TO BE AT LEAST 12"X12"X10" DEEP (OR 10"X14"X10" DEEP) WITH A MINIMUM 18" DRAINBOARD AT EACH SIDE.
  P. A SEPARATE WET WASTE DUMP FIXTURE SHALL BE PROVIDED FOR DISPOSAL OF DRINK OR WASTE ICE OR COFFEE WASTE.
  Q. EACH HANDWASHING SINK MUST HAVE PERMANENTLY MOUNTED SINGLE SERVICE SOAP AND PAPER TOWEL DISPENSERS.
  R. THE HOT WATER HEATER WILL BE A COMMERCIAL TYPE CAPABLE OF CONSTANTLY SUPPLYING HOT WATER AT A TEMPERATURE OF 120º F TO ALL SINKS. IN SIZING THE WATER HEATER, THE PEAK HOURLY DEMAND FOR ALL SINKS, ETC., ARE ADDED TOGETHER TO DETERMINE THE MINIMUM REQUIRED RECOVERY RATE.
  S. ALL LAVATORIES OR HAND SINKS WILL HAVE A COMBINATION FAUCET OR PREMIXING FAUCET CAPABLE OF SUPPLYING WATER TEMPERED TO 100ºF, SELF-CLOSING OR METERED FAUCET TO PROVIDE AT LEAST 15 SECONDS OF WATER WITHOUT REACTIVATION.
  T. ALL PLUMBING, ELECTRICAL AND GAS LINES SHALL BE CONCEALED WITHIN THE BUILDING STRUCTURE TO AS GREAT AN EXTENT AS POSSIBLE. ALL EXPOSED CONDUITS, PLUMBING, ETC., SHALL BE INSTALLED AT LEAST 6" OFF FLOORS AND FROM WALLS USING STANDOFF BRACKETS.
  U. CONDUITS, PLUMBING OR PIPING CANNOT BE INSTALLED ACROSS ANY AISLE WAY, TRAFFIC AREA OR DOOR OPENING.
  V. MULTIPLE RUNS OR CLUSTERS OF CONDUITS OR PIPELINES SHALL BE FURRED IN OR ENCASED IN AN APPROVED SEALED ENCLOSURE.
  W. ALL LIQUID WASTE SHALL BE DRAINED BY MEANS OF INDIRECT WASTE PIPES INTO A FLOOR SINK. FLOOR SINKS ARE TO BE INSTALLED FLUSH WITH THE FINISH FLOOR SURFACE AND HAVE A SUITABLE EASILY REMOVABLE SAFETY COVER GRATES.
  X. FLOOR SINKS TO BE 50% EXPOSED WHEN NO ACCESS IS PROVIDED FOR CLEANING OR BE IN LINE WITH THE FRONT FACE OF ELEVATED FREESTANDING EQUIPMENT.
  Y. APPROVED BACKFLOW PREVENTION DEVICES SHALL BE PROPERLY INSTALLED UPSTREAM OF ANY POTENTIAL HAZARD BETWEEN THE POTABLE WATER SUPPLY AND A SOURCE OF CONTAMINATION, HOSES SHALL NO BE ATTACHED TO A FAUCET OR HOSE BIBB UNLESS AN APPROVED BACKFLOW PREVENTER IS PROVIDED.
  Z. WATER SUPPLY TO CARBONATES SHALL BE PROTECTED BY AN APPROVES REDUCED PRESSURE PRINCIPLE BACKFLOW PREVENTER. THE RELIEF VALVE SHALL DRAIN INDIRECTLY TO SEWER WITH A LEGAL AIR GAP.
  AA. FOR CLEANING FLOOR MATS, THE JANITORIAL SINK TO BE A MINIMUM 24"X36" FLOOR-MOUNTED TYPE. MOPS SHALL BE PLACED IN A POSITION THAT ALLOWS THEM TO AIR-DRY WITHOUT SOILING WALLS, EQUIPMENT, OR SUPPLIES.
  BB. THE JANITORIAL SINK FAUCET WILL HAVE A THREADED OUTER LIP FOR HOSE ATTACHMENT AND AN APPROVED BACKFLOW PREVENTION DEVICE. NO CHEMICAL DISPENSING SYSTEM OR SHUTOFF VALVES TO BE ATTACHED TO MOP SINK FAUCET OUTLET (UNLESS SIDEKICK PLUMBING DEVICE IS INSTALLED).
  CC. NO CONDENSATE OR WASTEWATER INCLUDING HVAC WILL DRAIN INTO JANITORIAL SINK.
  DD. GREASE TRAP TO BE LOCATED OUTSIDE THE FOOD SERVICE ACTIVITY AREA, FLUSH WITH THE FINISHED FLOOR WHEN INDOORS. LOCAL WASTEWATER DISTRICT OR BUILDING DEPARTMENT TO BE CONTRACTED FOR GREASE REMOVAL REQUIREMENTS.
  EE. FLOOR DRAINS SHALL BE INSTALLED IN FLOORS THAT ARE WATER-FLUSHED FOR CLEANING AND IN AREAS WHERE PRESSURE SPRAY METHOD FOR CLEANING EQUIPMENT ARE USED, IN RESTROOMS, JANITORIAL ROOMS, SCULLERIES, AND AT BAR WITH WAREWASHING. FLOOR SURFACES IN AREAS PURSUANT TO THIS SHALL BE SLOPED 1:50 TO THE FLOOR DRAINS.
  FF. ADEQUATE VENTILATION IS TO BE PROVIDED TO ALL TOILET ROOMS, JANITOR CLOSET WITH MOP SINKS, AND INDOOR TRASH ROOMS AND IN DRESSING/CHANGE ROOMS.
  GG. THE FLOOR FINISH WILL HAVE A SMOOTH SURFACE UNDER ALL EQUIPMENT AND WALKWAYS WILL HAVE A LIGHT TEXTURE ONLY.
  HH. THE PAINT USED ON WALLS AND CEILING OF ALL KITCHEN, FOOD PREPARATION, WORK, AND STORAGE AREAS WILL BE A GLOSS OR SEMI-GLOSS ENAMEL. FINISH MATERIAL SHALL BE A LIGHT COLOR IN FOOD PREP AREAS FOR WASH CLEANING.
  II. PRIOR TO INSTALLATION, SAMPLE OF FINISHES TO BE SUBMITTED TO ENVIRONMENTAL HEALTH FOR APPROVAL AS NEEDED.
  JJ. COLD STORAGE ROOMS SHALL BE PROVIDED WITH A SECTION OF SHELVING INSTALLED TO HOLD SHALLOW DOWN PANS - NOT TO EXCEED 4" IN HEIGHT. SPACE BETWEEN SHELVING TO BE AT LEAST 8" HIGH.
  KK. BACKUP DRY STORAGE SHELVING SHALL BE A MINIMUM OF 96 LINEAR FEET (MEASURE IN TIERS) OR 25" OF KITCHEN, FOOD PREP, AND WORK AREAS, WHICHEVER IS GREATER. SHELVING SHALL BE AT LEAST 18" DEEP AND START A MINIMUM SIX INCHES OF THE FLOOR SURFACE.
  LL. ALL SEAMS, GABS, OPENINGS TO BE PROPERLY SEALED.

NDAA
group
architects
4990 N Harbor Drive, Ste 201
San Diego, CA 92106
tel: 619-297-8066
web: www.ndaainc.com

LICENSED ARCHITECT
DANUBE TALAT
No. C38046
REN 11/30/2023
STATE OF CALIFORNIA

DO NOT SCALE DRAWINGS.
ANY DISCREPANCIES TO BE REVIEWED WITH THE ARCHITECT.

SAN DIEGO FAMILY DERMATOLOGY
222 W. MADISON AVENUE
EL CAJON, CA 92020

REVISION SCHEDULE

Nº	DATE	ISSUE
1	07/06/2023	1ST CITY REVIEW
2	08/22/2023	2ND CITY REVIEW

Project No:	BP-2023-0267
Project Start Date:	Issue Date
Drawn:	Designer
Checked:	Checker
Revision:	

Sheet Name:
GENERAL NOTES

Scale: 1/8" = 1'-0"
Sheet No:
A-012

8/25/2023 10:51:09 AM

A. ACCESSIBLE ROUTE OF TRAVEL

1. ACCESSIBLE ROUTE IS DEFINED AS "A CONTINUOUS UNOBSTRUCTED PATH CONNECTING ACCESSIBLE ELEMENTS AND SPACES OF AN ACCESSIBLE SITE, BUILDING OR FACILITY THAT CAN BE NEGOTIATED BY A PERSON WITH A DISABILITY USING A WHEELCHAIR, AND THAT IS ALSO SAFE FOR AND USABLE BY PERSONS WITH OTHER DISABILITIES. INTERIOR ACCESSIBLE ROUTES MAY INCLUDE CORRIDORS, HALLWAYS, FLOORS, RAMPS, ELEVATORS AND LIFTS. EXTERIOR ACCESSIBLE ROUTES MAY INCLUDE PARKING ACCESS AISLES, CURB RAMPS, CROSSWALKS AT VEHICULAR WAYS, WALKS, RAMPS AND LIFTS." ACCESSIBLE ROUTES SHALL BE PROVIDED IN ACCORDANCE WITH SECTION 11B-206 AND SHALL COMPLY WITH DIVISION 4. (11B-206.1)

2. AT LEAST ONE ACCESSIBLE ROUTE SHALL BE PROVIDED WITHIN THE SITE FROM ACCESSIBLE PARKING SPACES AND ACCESSIBLE PASSENGER DROP-OFF AND LOADING ZONES; PUBLIC STREETS AND SIDEWALKS; AND PUBLIC TRANSPORTATION STOPS TO THE ACCESSIBLE BUILDING OR FACILITY ENTRANCE THEY SERVE. WHERE MORE THAN ONE ROUTE IS PROVIDED, ALL ROUTES MUST BE ACCESSIBLE. (11B-206.2.1)

3. AT LEAST ONE ACCESSIBLE ROUTE SHALL CONNECT ACCESSIBLE BUILDINGS, ACCESSIBLE FACILITIES, ACCESSIBLE ELEMENTS, AND ACCESSIBLE SPACES THAT ARE ON THE SAME SITE. (11B-206.2.2)

4. AT LEAST ONE ACCESSIBLE ROUTE SHALL CONNECT EACH STORY AND MEZZANINE IN MULTISTORY BUILDINGS AND FACILITIES. (11B-206.2.3)

5. AT LEAST ONE ACCESSIBLE ROUTE SHALL CONNECT ACCESSIBLE BUILDING OR FACILITY ENTRANCES WITH ALL ACCESSIBLE SPACES AND ELEMENTS WITHIN THE BUILDING OR FACILITY, INCLUDING MEZZANINES, WHICH ARE OTHERWISE CONNECTED BY A CIRCULATION PATH UNLESS EXEMPTED BY SECTION 11B-206.2.3 EXCEPTIONS 1 THROUGH 7. (11B-206.2.4)

6. IN RESTAURANTS, CAFETERIAS, BANQUET FACILITIES, BARS, AND SIMILAR FACILITIES, AN ACCESSIBLE ROUTE SHALL BE PROVIDED TO ALL FUNCTIONAL AREAS, INCLUDING RAISED OR SUNKEN AREAS, AND OUTDOOR AREAS. (11B-206.2.5)

7. COMMON USE CIRCULATION PATHS WITHIN EMPLOYEE WORK AREAS SHALL COMPLY WITH SECTION 11B-402. (11B-206.2.8)

8. EXERCISE MACHINES AND EQUIPMENT REQUIRED TO COMPLY WITH 11B-236 SHALL BE ON AN ACCESSIBLE ROUTE. (11B-206.2.13)

9. ACCESSIBLE ROUTES SHALL COINCIDE WITH OR BE LOCATED IN THE SAME AREA AS GENERAL CIRCULATION PATHS. WHERE CIRCULATION PATHS ARE INTERIOR, REQUIRED ACCESSIBLE ROUTES SHALL ALSO BE INTERIOR. AN ACCESSIBLE ROUTE SHALL NOT PASS THROUGH KITCHENS, STORAGE ROOMS, RESTROOMS, CLOSETS OR OTHER SPACES USED FOR SIMILAR PURPOSES, EXCEPT AS PERMITTED BY CHAPTER 10. (11B-206.3)

B. ACCESSIBLE ROUTES

1. ACCESSIBLE ROUTES SHALL CONSIST OF ONE OR MORE OF THE FOLLOWING COMPONENTS: WALKING SURFACES WITH A RUNNING SLOPE NOT STEEPER THAN 1:20, DOORWAYS, RAMPS, CURB RAMPS EXCLUDING THE FLARED SIDES, ELEVATORS, AND PLATFORM LIFTS. ALL COMPONENTS OF AN ACCESSIBLE ROUTE SHALL COMPLY WITH THE APPLICABLE REQUIREMENTS OF DIVISION 4. (11B-402.2)

2. WALKING SURFACES THAT ARE A PART OF AN ACCESSIBLE ROUTE SHALL COMPLY WITH SECTION 11B-403. (11B-403.1)

3. THE RUNNING SLOPE OF WALKING SURFACES SHALL NOT BE STEEPER THAN 1:20. THE CROSS SLOPE OF WALKING SURFACES SHALL NOT BE STEEPER THAN 1:48. (11B-403.3) EXCEPTION: THE RUNNING SLOPE OF SIDEWALKS SHALL NOT EXCEED THE GENERAL GRADE ESTABLISHED FOR THE ADJACENT STREET OR HIGHWAY.

4. CHANGES IN LEVEL SHALL COMPLY WITH SECTION 11B-303. (11B-403.4)

5. WALKING SURFACES SHALL PROVIDE CLEARANCES COMPLYING WITH SECTION 11B-403.5. (11B-403.5)
EXCEPTION: WITHIN EMPLOYEE WORK AREAS, CLEARANCES ON COMMON USE CIRCULATION PATHS SHALL BE PERMITTED TO BE DECREASED BY WORK AREA EQUIPMENT PROVIDED THAT THE DECREASE IS ESSENTIAL TO THE FUNCTION OF THE WORK BEING PERFORMED.

6. EXCEPT AS PROVIDED IN SECTIONS 11B-403.5.2 AND 11B-403.5.3, THE CLEAR WIDTH OF WALKING SURFACES SHALL BE 36 INCHES (915 MM) MINIMUM. (11B-403.5.1)
EXCEPTION:
1. THE CLEAR WIDTH SHALL BE PERMITTED TO BE REDUCED TO 32 INCHES (815 MM) MIN FOR A LENGTH OF 24 INCHES (610 MM) MAX PROVIDED THAT REDUCED WIDTH SEGMENTS ARE SEPARATED BY SEGMENTS THAT ARE 48 INCHES (1220 MM) LONG MINIMUM AND 36 INCHES (915 MM) WIDE MINIMUM.
2. THE CLEAR WIDTH FOR WALKING SURFACES IN CORRIDORS SERVING AN OCCUPANT LOAD OF 10 OR MORE SHALL BE 44 INCHES MIN.
3. THE CLEAR WIDTH FOR SIDEWALKS AND WALKS SHALL BE 48 INCHES MIN. WHEN, BECAUSE OF RIGHT-OF-WAY RESTRICTIONS, NATURAL BARRIERS OR OTHER EXISTING CONDITIONS, THE ENFORCING AGENCY DETERMINES THAT COMPLIANCE WITH THE 48-INCH CLEAR SIDEWALK WIDTH WOULD CREATE AN UNREASONABLE HARDSHIP, THE CLEAR WIDTH MAY BE REDUCED TO 36 INCHES.
4. THE CLEAR WIDTH FOR AISLES SHALL BE 36 INCHES (914 MM) MINIMUM IF SERVING ELEMENTS ON ONLY ONE SIDE, AND 44 INCHES (1118 MM) MINIMUM IF SERVING ELEMENTS ON BOTH SIDES.

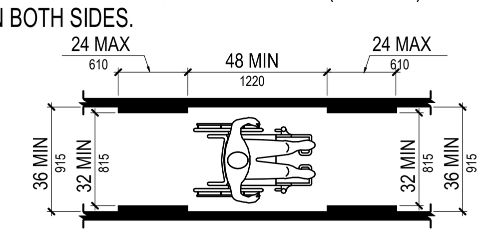

FIGURE 11B-403.5.1 - CLEAR WIDTH OF AN ACCESSIBLE ROUTE

7. WHERE THE ACCESSIBLE ROUTE MAKES A 180 DEGREE TURN AROUND AN ELEMENT WHICH IS LESS THAN 48 INCHES (1220 MM) WIDE, CLEAR WIDTH SHALL BE 42 INCHES (1065 MM) MINIMUM APPROACHING THE TURN, 48 INCHES (1220 MM) MINIMUM AT THE TURN AND 42 INCHES (1065 MM) MINIMUM LEAVING THE TURN. (11B-403.5.2)

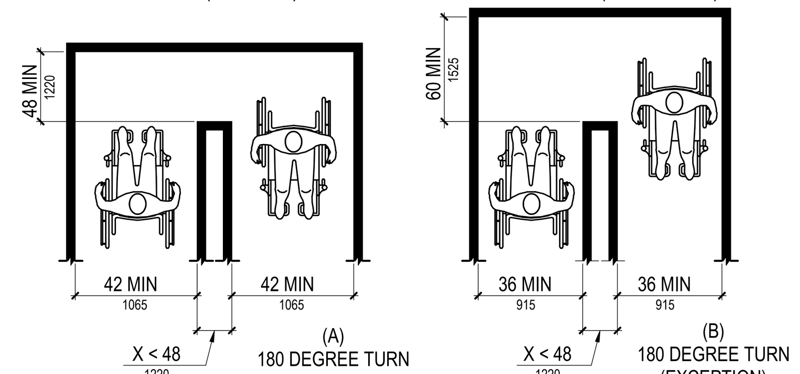

FIGURE 11B-403.5.2 - CLEAR WIDTH AT TURN

8. AN ACCESSIBLE ROUTE WITH A CLEAR WIDTH LESS THAN 60 INCHES (1525 MM) SHALL PROVIDE PASSING SPACES AT INTERVALS OF 200 FEET (60,960 MM) MAXIMUM. PASSING SPACES SHALL BE EITHER: A SPACE 60 INCHES (1524 MM) MINIMUM BY 60 INCHES (1524 MM) MINIMUM; OR, AN INTERSECTION OF TWO WALKING SURFACES PROVIDING A T-SHAPED SPACE COMPLYING WITH SECTION 11B-304.3.2 WHERE THE BASE AND ARMS OF THE T-SHAPED SPACE EXTEND 48 INCHES (1219) MM MINIMUM BEYOND THE INTERSECTION. (11B-403.5.3)

9. REVOLVING DOORS, REVOLVING GATES, AND TURNSTILES SHALL NOT BE PART OF AN ACCESSIBLE ROUTE. (11B-404.2.1)

10. MEANS OF EGRESS SHALL COMPLY WITH CHAPTER 10, SECTION 1009. EXCEPTIONS: 1. WHERE MEANS OF EGRESS ARE PERMITTED BY LOCAL BUILDING OR LIFE SAFETY CODES TO SHARE A COMMON PATH OF EGRESS TRAVEL, ACCESSIBLE MEANS OF EGRESS SHALL BE PERMITTED TO SHARE A COMMON PATH OF EGRESS TRAVEL. (11B-207.1)

11. STANDBY POWER SHALL BE PROVIDED FOR PLATFORM LIFTS PERMITTED BY CHAPTER 10, SECTION 1009.5 TO SERVE AS A PART OF AN ACCESSIBLE MEANS OF EGRESS. TO ENSURE CONTINUED OPERATION IN CASE OF PRIMARY POWER LOSS, PLATFORM LIFTS SHALL BE PROVIDED WITH STANDBY POWER OR WITH SELF RECHARGEABLE BATTERY POWER THAT PROVIDES SUFFICIENT POWER TO OPERATE ALL PLATFORM LIFT FUNCTIONS FOR A MINIMUM OF FIVE UPWARD AND DOWNWARD TRIPS. (11B-207.2)

C. RAMPS

1. CHANGES IN LEVEL GREATER THAN 1/2 INCH HIGH SHALL BE RAMPED, AND SHALL COMPLY WITH 11B-405 OR 11B-406. (11B-303.4)

2. RAMP RUNS SHALL HAVE A RUNNING SLOPE NOT STEEPER THAN 1:12. (11B-405.2)

3. CROSS SLOPE OF RAMP RUNS SHALL NOT BE STEEPER THAN 1:48. (11B-405.3)

4. FLOOR OR GROUND SURFACES OF RAMP RUNS SHALL COMPLY WITH SECTION 11B-302. (11B-405.4)

5. THE CLEAR WIDTH OF A RAMP RUN SHALL BE 48 INCHES (1219 MM) MINIMUM. (11B-405.5)

6. THE RISE FOR ANY RAMP RUN SHALL BE 30 INCHES (760 MM) MAXIMUM. (11B-405.6)

7. RAMPS SHALL HAVE LANDINGS AT THE TOP AND THE BOTTOM OF EACH RAMP RUN. LANDINGS SHALL COMPLY WITH SECTION 11B-405.7. (11B-405.7)

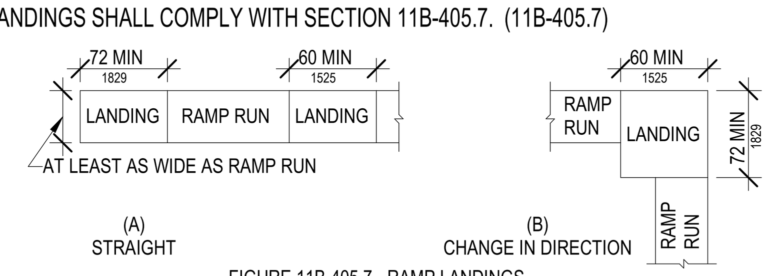

FIGURE 11B-405.7 - RAMP LANDINGS

8. LANDINGS SHALL COMPLY WITH SECTION 11B-302. CHANGES IN LEVEL ARE NOT PERMITTED. (11B-405.7.1)

9. THE LANDING CLEAR WIDTH SHALL BE AT LEAST AS WIDE AS THE WIDEST RAMP RUN LEADING TO THE LANDING. (11B-405.7.2)

10. THE LANDING CLEAR LENGTH SHALL BE 60 INCHES LONG MINIMUM. (11B-405.7.3)

11. RAMPS THAT CHANGE DIRECTION BETWEEN RUNS AT LANDINGS SHALL HAVE A CLEAR LANDING 60 INCHES MINIMUM BY 72 INCHES MINIMUM IN THE DIRECTION OF DOWNWARD TRAVEL FROM UPPER RAMP RUN. (11B-405.7.4)

12. WHERE DOORWAYS ARE LOCATED ADJACENT TO A RAMP LANDING, MANEUVERING CLEARANCES REQUIRED BY SECTION 11B-404.2.4 AND 11B-404.3.2 SHALL BE PERMITTED TO OVERLAP THE REQUIRED LANDING. DOORS WHEN FULLY OPEN, SHALL NOT REDUCE THE REQUIRED RAMP LANDING WIDTH BY MORE THAN 3 INCHES. DOORS, IN ANY POSITION, SHALL NOT REDUCE THE MINIMUM DIMENSIONS OF THE RAMP LANDING TO LESS THAN 42 INCHES. (11B-405.7.5)

13. RAMP RUNS SHALL HAVE HANDRAILS COMPLYING WITH SECTION 11B-505. (11B-405.8)

14. EDGE PROTECTION COMPLYING WITH SECTION 11B-405.9.2 SHALL BE PROVIDED ON EACH SIDE OF RAMP RUNS AND AT EACH SIDE OF RAMP LANDINGS. (11B-405.9)

15. A CURB, 2 INCHES HIGH MINIMUM, OR BARRIER SHALL BE PROVIDED THAT PREVENTS THE PASSAGE OF A 4 INCH DIAMETER SPHERE, WHERE ANY PORTION OF THE SPHERE IS WITHIN 4 INCHES OF THE FINISH FLOOR OR GROUND SURFACE. TO PREVENT WHEEL ENTRAPMENT, THE CURB OR BARRIER SHALL PROVIDE A CONTINUOUS AND UNINTERRUPTED BARRIER ALONG THE LENGTH OF THE RAMP. (11B-405.9.2)

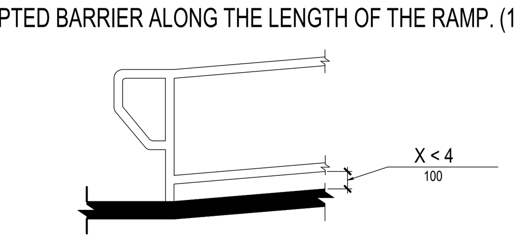

FIGURE 11B-405.9.2 CURB OR BARRIER EDGE PROTECTION

16. PERPENDICULAR CURB RAMPS SHALL COMPLY WITH SECTIONS 11B-406.2 AND 406.5. (11B-406.2) RAMP RUNS SHALL HAVE A RUNNING SLOPE NOT STEEPER THAN 1:12. (11B-406.2.1) WHERE PROVIDED, CURB RAMP FLARES SHALL NOT BE STEEPER THAN 1:10. (11B-406.2.2)

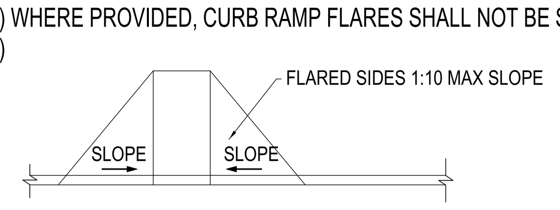

FIGURE 406.2.2
SIDES OF CURB RAMPS

17. PARALLEL CURB RAMPS SHALL COMPLY WITH SECTIONS 11B-406.3 AND 406.5. (11B-406.3) THE RUNNING SLOPE OF THE CURB RAMP SEGMENTS SHALL BE IN-LINE WITH THE DIRECTION OF SIDEWALK TRAVEL. RAMP RUNS SHALL HAVE A RUNNING SLOPE NOT STEEPER THAN 1:12. (11B-406.3.1) A TURNING SPACE 48 INCHES MINIMUM BY 48 INCHES MINIMUM SHOULD BE PROVIDED AT THE BOTTOM OF THE CURB RAMP. THE SLOPE OF THE TURNING SPACE IN ALL DIRECTIONS SHALL BE 1:48 MAXIMUM. (11B-406.3.2)

18. CURB RAMPS AND THE FLARED SIDES OF CURB RAMPS SHALL BE LOCATED SO THAT THEY DO NOT PROJECT INTO VEHICULAR TRAFFIC LANES, PARKING SPACES, OR PARKING ACCESS AISLES. CURB RAMPS AT MARKED CROSSINGS SHALL BE WHOLLY CONTAINED WITHIN THE MARKINGS, EXCLUDING ANY FLARED SIDES. (11B-406.5.1)

19. THE CLEAR WIDTH OF CURB RAMP RUNS (EXCLUDING ANY FLARED SIDES), BLENDED TRANSITIONS, AND TURNING SPACES SHALL BE 48 INCHES MINIMUM. (11B-406.5.2)

20. LANDINGS SHALL BE PROVIDED AT THE TOPS OF CURB RAMPS AND BLENDED TRANSITIONS. THE LANDING CLEAR LENGTH SHALL BE 48 INCHES MINIMUM. THE LANDING CLEAR WIDTH SHALL BE AT LEAST AS WIDE AS THE CURB RAMP, EXCLUDING ANY FLARED SIDES, OR THE BLENDED TRANSITION LEADING TO THE LANDING. THE SLOPE OF THE LANDING IN ALL DIRECTIONS SHALL BE 1:48 MAXIMUM. (11B-406.5.3)

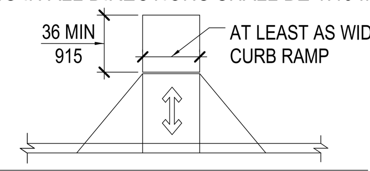

FIGURE 406.5.3
LANDINGS AT THE TOP OF CURB RAMPS

21. GRADE BREAKS AT THE TOP AND BOTTOM OF CURB RAMP RUNS SHALL BE PERPENDICULAR TO THE DIRECTION OF THE RAMP RUN. GRADE BREAKS SHALL NOT BE PERMITTED ON THE SURFACE OF RAMP RUNS AND TURNING SPACES. SURFACE SLOPES THAT MEET AT GRADE BREAKS SHALL BE FLUSH. (11B-406.5.6)

22. COUNTER SLOPES OF ADJOINING GUTTERS AND ROAD SURFACES IMMEDIATELY ADJACENT TO AND WITHIN 24 INCHES OF THE CURB RAMP SHALL NOT BE STEEPER THAN 1:20. THE ADJACENT SURFACES AT TRANSITIONS AT CURB RAMPS TO WALKS, GUTTERS, AND STREETS SHALL BE AT THE SAME LEVEL. (11B-406.5.8)

23. THE BOTTOM OF DIAGONAL CURB RAMPS SHALL HAVE A CLEAR SPACE 48 INCHES MINIMUM OUTSIDE ACTIVE TRAFFIC LANES OF THE ROADWAY. DIAGONAL CURB RAMPS PROVIDED AT MARKED CROSSINGS SHALL PROVIDE THE 48 INCHES MINIMUM CLEAR SPACE WITHIN THE MARKINGS. (11B-406.5.9)

24. DIAGONAL OR CORNER TYPE RAMPS WITH RETURNED CURBS OR OTHER WELL-DEFINED EDGES SHALL HAVE THE EDGES PARALLEL TO THE DIRECTION OF PEDESTRIAN FLOW. DIAGONAL CURB RAMPS WITH FLARED SIDES SHALL HAVE A SEGMENT OF CURB 24 INCHES LONG MINIMUM LOCATED ON EACH SIDE OF THE CURB RAMP AND WITHIN THE MARKED CROSSING. (11B-406.5.10)

25. CURB RAMPS AND BLENDED TRANSITIONS SHALL HAVE DETECTABLE WARNINGS COMPLYING WITH SECTION 11B-705. (11B-406.5.12)

D. DETECTABLE WARNINGS

1. DETECTABLE WARNINGS SHALL CONSIST OF A SURFACE OF TRUNCATED DOMES AND SHALL COMPLY WITH SECTION 11B-705. (11B-705.1.1)

2. TRUNCATED DOMES IN A DETECTABLE WARNING SURFACE SHALL HAVE A BASE DIAMETER OF 0.9 INCH (23 MM) MINIMUM AND 0.92 INCHES (23.4 MM) MAXIMUM, A TOP DIAMETER OF 0.45 INCH (11.4 MM) MINIMUM TO 0.47 INCH (11.9 MM) MAXIMUM, AND A HEIGHT OF 0.2 INCH (5.1 MM). (11B-705.1.1.1)

3. TRUNCATED DOMES IN A DETECTABLE WARNING SURFACE SHALL HAVE A CENTER-TO-CENTER SPACING OF 2.3 INCHES (58 MM) MINIMUM AND 2.4 INCHES (61 MM) MAXIMUM, AND A BASE-TO-BASE SPACING OF 0.65 INCH (17 MM) MINIMUM, MEASURED BETWEEN THE MOST ADJACENT DOMES ON A SQUARE GRID. (11B-705.1.1.2)

4. DETECTABLE WARNING SURFACES AT TRANSIT BOARDING PLATFORM EDGES, BUS STOPS, HAZARDOUS VEHICULAR AREAS, REFLECTING POOLS, AND TRACK CROSSINGS SHALL BE YELLOW AND APPROXIMATE FS 33538 OF FEDERAL STANDARD 595C. DETECTABLE WARNINGS AT OTHER LOCATIONS SHALL PROVIDE A 70 PERCENT MINIMUM VISUAL CONTRAST WITH ADJACENT WALKING SURFACES. THE MATERIAL USED TO PROVIDE VISUAL CONTRAST SHALL BE AN INTEGRAL PART OF THE SURFACE. (11B-705.1.1.3)

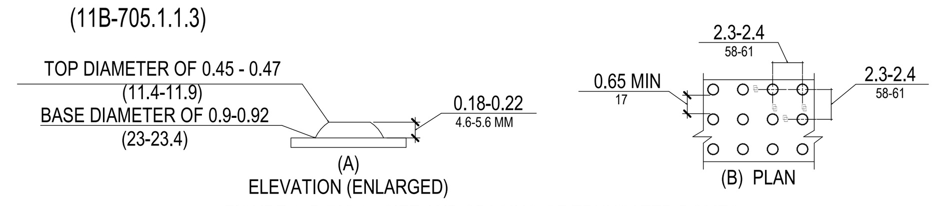

FIGURE 11B-705.1 - SIZE AND SPACING OF TRUNCATED DOMES

5. DETECTABLE WARNING SURFACES AT PLATFORM BOARDING EDGES SHALL BE 24 INCHES (610 MM) WIDE AND SHALL EXTEND THE FULL LENGTH OF THE PUBLIC USE AREAS OF THE PLATFORM. (11B-705.1.2.1)

6. DETECTABLE WARNINGS AT CURB RAMPS SHALL EXTEND 36 INCHES IN THE DIRECTION OF TRAVEL. DETECTABLE WARNINGS SHALL EXTEND THE FULL WIDTH OF THE RAMP RUN LESS 2 INCHES MAXIMUM ON EACH SIDE, EXCLUDING ANY FLARED SIDES. DETECTABLE WARNINGS SHALL BE LOCATED SO THE EDGE NEAREST THE CURB IS 6 INCHES MINIMUM AND 8 INCHES MAXIMUM FROM THE LINE AT THE FACE OF THE CURB MARKING THE TRANSITION BETWEEN THE CURB AND THE GUTTER, STREET OR HIGHWAY. (11B-705.1.2.2)

7. DETECTABLE WARNINGS AT HAZARDOUS VEHICULAR AREAS SHALL BE 36 INCHED IN WIDTH. (11B-705.1.2.5)

8. ONLY APPROVED DSA-AC DETECTABLE WARNING PRODUCTS AND DIRECTIONAL SURFACES SHALL BE INSTALLED AS PROVIDED IN THE CALIFORNIA CODE OF REGULATIONS (CCR), TITLE 24, PART 1, CHAPTER 5, ARTICLES 2, 3, AND 4. REFER TO CCR TITLE 24, PART 12, CHAPTER 11B, SECTION 12-11B.205 FOR BUILDING AND FACILITY ACCESS SPECIFICATIONS FOR PRODUCT APPROVAL FOR DETECTABLE WARNING PRODUCTS AND DIRECTIONAL SURFACES. (11B-705.3)

E. ENTRANCES AND EXITS

1. EXITS IS DEFINED AS "THAT PORTION OF A MEANS OF EGRESS SYSTEM BETWEEN THE EXIT ACCESS AND THE EXIT DISCHARGE OR PUBLIC WAY. EXIT COMPONENTS INCLUDE EXTERIOR EXIT DOORS AT THE LEVEL OF EXIT DISCHARGE, INTERIOR EXIT STAIRWAYS AND RAMPS, EXIT PASSAGEWAYS, EXTERIOR EXIT STAIRWAYS AND RAMPS AND HORIZONTAL EXITS."

2. ENTRANCES SHALL BE PROVIDED IN ACCORDANCE WITH SECTION 11B-206.4. ENTRANCE DOORS, DOORWAYS, AND GATES SHALL COMPLY WITH SECTION 11B-404 AND SHALL BE ON AN ACCESSIBLE ROUTE COMPLYING WITH SECTION 11B-402. (11B-206.4)

F. DOORS

1. DOOR OPENINGS SHALL PROVIDE A CLEAR WIDTH OF 32 INCHES MINIMUM. CLEAR OPENINGS OF DOORWAYS WITH SWINGING DOORS SHALL BE MEASURED BETWEEN THE FACE OF THE DOOR AND THE STOP, WITH THE DOOR OPEN 90 DEGREES. OPENINGS MORE THAN 24 INCHES DEEP SHALL PROVIDE A CLEAR OPENING OF 36 INCHES MINIMUM. THERE SHALL BE NO PROJECTIONS INTO THE REQUIRED CLEAR OPENING WIDTH LOWER THAN 34 INCHES ABOVE THE FINISH FLOOR OR GROUND. PROJECTIONS INTO THE CLEAR OPENING WIDTH BETWEEN 34 INCHES AND 80 INCHES ABOVE THE FINISH FLOOR OR GROUND SHALL NOT EXCEED 4 INCHES. (11B-404.2.3)

FIGURE 11B-404.2.3 - CLEAR WIDTH OF DOORWAYS

2. MINIMUM MANEUVERING CLEARANCES AT DOORS AND GATES SHALL COMPLY WITH SECTION 11B-404.2.4. MANEUVERING CLEARANCES SHALL EXTEND THE FULL WIDTH OF THE DOORWAY AND THE REQUIRED LATCH SIDE OR HINGE SIDE CLEARANCE. (11B-404.2.4)

3. MANEUVERING CLEARANCES FOR FORWARD APPROACH SHALL BE PROVIDED WHEN ANY OBSTRUCTION WITHIN 18 INCHES (455 MM) OF THE LATCH SIDE OF AN INTERIOR DOORWAY, OR WITHIN 24 INCHES (610 MM) OF THE LATCH SIDE OF AN EXTERIOR DOORWAY, PROJECTS MORE THAN 8 INCHES (205 MM) BEYOND THE FACE OF THE DOOR, MEASURED PERPENDICULAR TO THE FACE OF THE DOOR OR GATE. (11B-404.2.4.3)

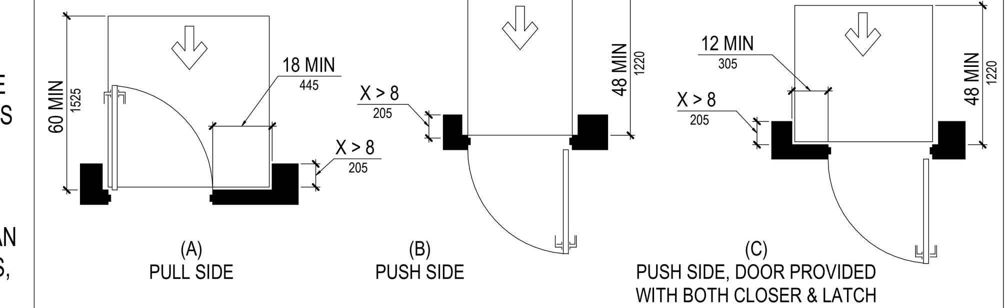

FIGURE 11B-404.2.4.3
MANEUVERING CLEARANCES AT RECESSED DOORS AND GATES

4. THE DISTANCE BETWEEN TWO HINGED OR PIVOTED DOORS IN SERIES AND GATES IN SERIES SHALL BE 48 INCHES (1220 MM) MINIMUM PLUS THE WIDTH OF DOORS OR GATES SWINGING INTO THE SPACE. (11B-404.2.6)

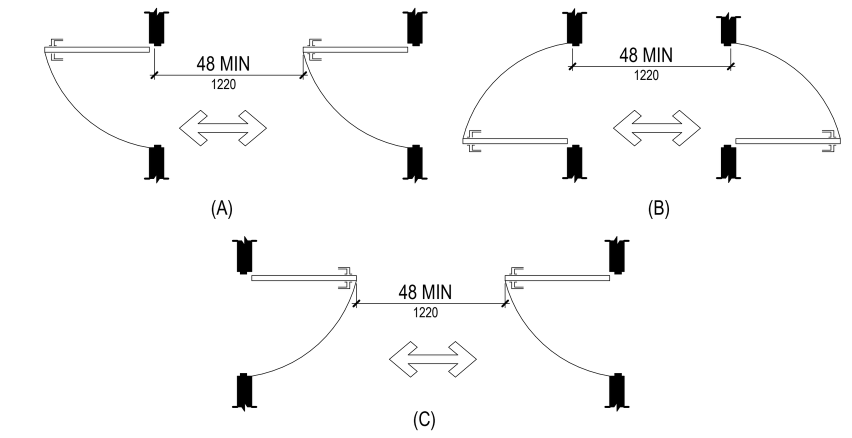

FIGURE 11B-404.2.6 - DOORS IN SERIES AND GATES IN SERIES

5. HANDLES, PULLS, LATCHES, LOCKS, AND OTHER OPERABLE PARTS ON DOORS AND GATES SHALL COMPLY WITH SECTION 11B-309.4. OPERABLE PARTS OF SUCH HARDWARE SHALL BE 34 INCHES (865 MM) MINIMUM AND 44 INCHES (1220 MM) MAXIMUM ABOVE THE FINISH FLOOR OR GROUND. WHERE SLIDING DOORS ARE IN THE FULLY OPEN POSITION, OPERATING HARDWARE SHALL BE EXPOSED AND USABLE FROM BOTH SIDES. (11B-404.2.7)

6. DOOR CLOSERS AND GATE CLOSERS SHALL BE ADJUSTED SO THAT FROM AN OPEN POSITION OF 90 DEGREES, THE TIME REQUIRED TO MOVE THE DOOR TO A POSITION OF 12 DEGREES FROM THE LATCH IS 5 SECONDS MINIMUM. (11B-404.2.8.1)

7. DOOR AND GATE SPRING HINGES SHALL BE ADJUSTED SO THAT FROM THE OPEN POSITION OF 70 DEGREES, THE DOOR OR GATE SHALL MOVE TO THE CLOSED POSITION IN 1.5 SECONDS MINIMUM. (11B-404.2.8.2)

8. THE FORCE FOR PUSHING OR PULLING OPEN A DOOR OR GATE SHALL BE AS FOLLOWS:
1. INTERIOR HINGED DOORS AND GATES: 5 POUNDS MAXIMUM.
2. SLIDING OR FOLDING DOORS: 5 POUNDS MAXIMUM.
3. REQUIRED FIRE DOORS: THE MINIMUM OPENING FORCE ALLOWABLE BY THE APPROPRIATE ADMINISTRATIVE AUTHORITY, NOT TO EXCEED 15 POUNDS.
4. EXTERIOR HINGED DOORS: 5 POUNDS MAXIMUM.

9. SWINGING DOOR AND GATE SURFACES WITHIN 10 INCHES (255 MM) OF THE FINISH FLOOR OR GROUND MEASURED VERTICALLY SHALL HAVE A SMOOTH SURFACE ON THE PUSH SIDE EXTENDING THE FULL WIDTH OF THE DOOR OR GATE. PARTS CREATING HORIZONTAL OR VERTICAL JOINTS IN THESE SURFACES SHALL BE WITHIN 1/16 INCH (1.6 MM) OF THE SAME PLANE AS THE OTHER AND BE FREE OF SHARP OR ABRASIVE EDGES. CAVITIES CREATED BY ADDED KICK PLATES SHALL BE CAPPED. (11B-404.2.10)

10. DOORS, GATES, AND SIDE LIGHTS ADJACENT TO DOORS OR GATES, CONTAINING ONE OR MORE GLAZING PANELS THAT PERMIT VIEWING THROUGH THE PANELS SHALL HAVE THE BOTTOM OF AT LEAST ONE GLAZED PANEL LOCATED 43 INCHES (1090 MM) MAXIMUM ABOVE THE FINISH FLOOR. (11B-404.2.11)

11. AUTOMATIC DOORS AND AUTOMATIC GATES SHALL COMPLY WITH SECTION 11B-404.3. FULL-POWERED AUTOMATIC DOORS SHALL COMPLY WITH ANSI/BHMA A156.10. LOW-ENERGY AND POWER-ASSISTED DOORS SHALL COMPLY WITH ANSI/BHMA A156.19. (11B-404.3)

12. CLEARANCES AT POWER-ASSISTED DOORS AND GATES SHALL COMPLY WITH SECTION 11B-404.2.4. CLEARANCES AT AUTOMATIC DOORS AND GATES WITHOUT STANDBY POWER AND SERVING AN ACCESSIBLE MEANS OF EGRESS SHALL COMPLY WITH SECTION 11B-404.2.4. (11B-404.3.2)

G. FLOORS

1. CARPET OR CARPET TILE SHALL BE SECURELY ATTACHED AND SHALL HAVE A FIRM CUSHION, PAD, OR BACKING OR NO CUSHION OR PAD. CARPET OR CARPET TILE SHALL HAVE A LEVEL LOOP, TEXTURED LOOP, LEVEL CUT PILE, OR LEVEL CUT/UNCUT PILE TEXTURE. PILE HEIGHT SHALL BE 1/2 INCH (12.7 MM) MAXIMUM. EXPOSED EDGES OF CARPET SHALL BE FASTENED TO FLOOR SURFACES AND SHALL HAVE TRIM ON THE ENTIRE LENGTH OF THE EXPOSED EDGE. CARPET EDGE TRIM SHALL COMPLY WITH SECTION 11B-303. (11B-302.2)

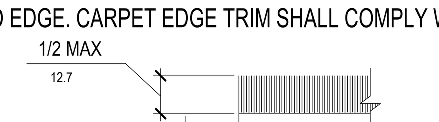

FIGURE 11B-302.2 - CARPET PILE HEIGHT

2. OPENINGS IN FLOOR OR GROUND SURFACES SHALL NOT ALLOW PASSAGE OF A SPHERE MORE THAN 1/2 INCH (12.7 MM) DIAMETER EXCEPT AS ALLOWED IN SECTIONS 11B-407.4.3, 11B-409.4.3, 11B-410.4, 11B-810.5.3 AND 11B-810.10. ELONGATED OPENINGS SHALL BE PLACED SO THAT THE LONG DIMENSION IS PERPENDICULAR TO THE DOMINANT DIRECTION OF TRAVEL. (11B-302.3)

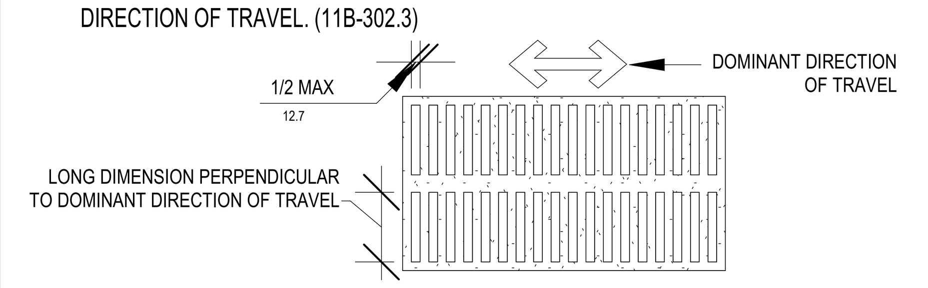

FIGURE 11B-302.3 - ELONGATED OPENINGS IN FLOOR OR GROUND SURFACES

3. CHANGES IN LEVEL OF 1/4 INCH (6.4 MM) HIGH MAXIMUM SHALL BE PERMITTED TO BE VERTICAL AND WITHOUT EDGE TREATMENT. (11B-303.2)

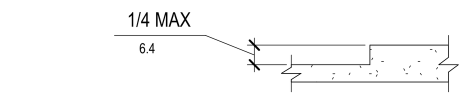

FIGURE 11B-303.2 - VERTICAL CHANGE IN LEVEL

4. CHANGES IN LEVEL BETWEEN 1/4 INCH (6.4 MM) HIGH MINIMUM AND 1/2 INCH (12.7 MM) HIGH MAXIMUM SHALL BE BEVELED WITH A SLOPE NOT STEEPER THAN 1:2. (11B-303.3)

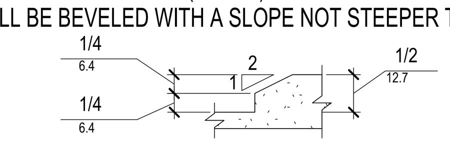

FIGURE 11B-303.3 - BEVELED CHANGE IN LEVEL

H. SPACE ALLOWANCE AND REACH RANGES

1. THE TURNING SPACE SHALL BE A SPACE OF 60 INCHES (1524 MM) DIAMETER MINIMUM. THE SPACE SHALL BE PERMITTED TO INCLUDE KNEE AND TOE CLEARANCE COMPLYING WITH SECTION 11B-306.11B-304.3.2 T-SHAPED SPACE. THE TURNING SPACE SHALL BE A T-SHAPED SPACE WITHIN A 60 INCH (1524 MM) SQUARE MINIMUM WITH ARMS AND BASE 36 INCHES (914 MM) WIDE MINIMUM. EACH ARM OF THE T SHALL BE CLEAR OF OBSTRUCTIONS 12 INCHES (305 MM) MINIMUM IN EACH DIRECTION AND THE BASE SHALL BE CLEAR OF OBSTRUCTIONS 24 INCHES (610 MM) MINIMUM. THE SPACE SHALL BE PERMITTED TO INCLUDE KNEE AND TOE CLEARANCE COMPLYING WITH SECTION 11B-306 ONLY AT THE END OF EITHER THE BASE OR ONE ARM. (11B-304.3.1)

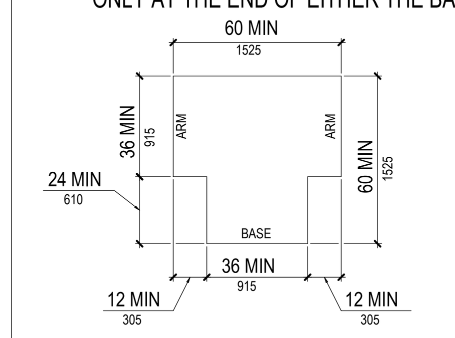

FIGURE 11B-304.3.2 - T-SHAPED TURNING SPACE

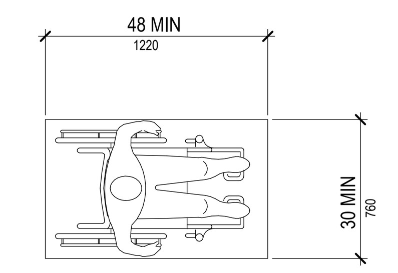

FIGURE 11B-305.3 - CLEAR FLOOR OR GROUND SPACE

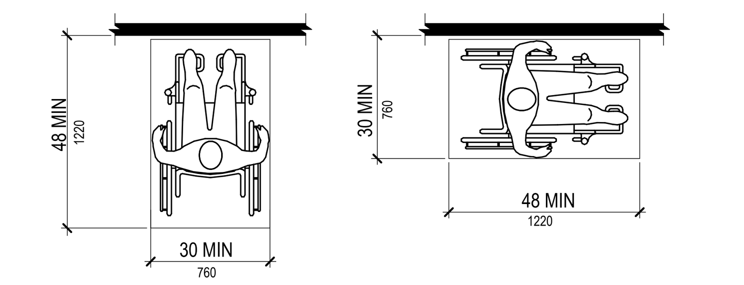

FIGURE 11B-305.5 - POSITION OF CLEAR FLOOR OR GROUND SPACE

2. ALCOVES SHALL BE 36 INCHES (915 MM) WIDE MINIMUM WHERE THE DEPTH EXCEEDS 24 INCHES (610 MM). (11B-305.7.1)

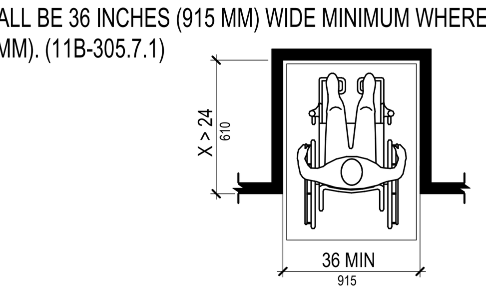

FIGURE 11B-305.7.1 - MANEUVERING CLEARANCE IN AN ALCOVE, FORWARD APPROACH

3. ALCOVES SHALL BE 60 INCHES (1525 MM) WIDE MINIMUM WHERE THE DEPTH EXCEEDS 15 INCHES (380 MM). (11B-305.7.2)

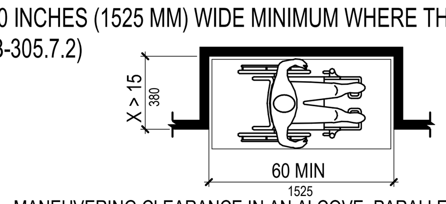

FIGURE 11B-305.7.2 - MANEUVERING CLEARANCE IN AN ALCOVE, PARALLEL APPROACH

4. SPACE UNDER AN ELEMENT BETWEEN THE FINISH FLOOR OR GROUND AND 9 INCHES (230 MM) ABOVE THE FINISH FLOOR OR GROUND SHALL BE CONSIDERED TOE CLEARANCE AND SHALL COMPLY WITH SECTION 11B-306.2. (11B-306.2.1)

5. TOE CLEARANCE SHALL EXTEND 25 INCHES (635 MM) MAXIMUM UNDER AN ELEMENT. (11B-306.2.2)

6. WHERE TOE CLEARANCE IS REQUIRED AT AN ELEMENT AS PART OF A CLEAR FLOOR SPACE, THE TOE CLEARANCE SHALL EXTEND 17 INCHES (430 MM) MINIMUM UNDER THE ELEMENT. (11B-306.2.3)

7. SPACE EXTENDING GREATER THAN 6 INCHES (150 MM) BEYOND THE AVAILABLE KNEE CLEARANCE AT 9 INCHES (230 MM) ABOVE THE FINISH FLOOR OR GROUND SHALL NOT BE CONSIDERED TOE CLEARANCE. (11B-306.2.4)

8. TOE CLEARANCE SHALL BE 30 INCHES (760 MM) WIDE MINIMUM. (11B-306.2.5)

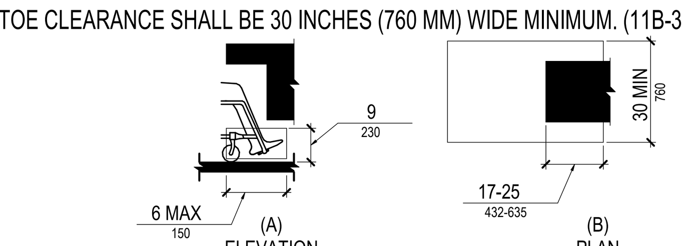

FIGURE 11B-306.2 - TOE CLEARANCE

9. SPACE UNDER AN ELEMENT BETWEEN 9 INCHES (229 MM) AND 27 INCHES (686 MM) ABOVE THE FINISH FLOOR OR GROUND SHALL BE CONSIDERED KNEE CLEARANCE AND SHALL COMPLY WITH SECTION 11B-306.3. (11B-306.3.1)
EXCEPTION: AT LAVATORIES REQUIRED TO BE ACCESSIBLE BY SECTION 11B-213.3.4, SPACE BETWEEN 9 INCHES (229 MM) AND 29 INCHES (737 MM) ABOVE THE FINISH FLOOR OR GROUND, SHALL BE CONSIDERED KNEE CLEARANCE.

10. KNEE CLEARANCE SHALL EXTEND 25 INCHES (635 MM) MAXIMUM UNDER AN ELEMENT AT 9 INCHES (229 MM) ABOVE THE FINISH FLOOR OR GROUND. (11B-306.3.2)

11. WHERE KNEE CLEARANCE IS REQUIRED UNDER AN ELEMENT AS PART OF A CLEAR FLOOR SPACE, THE KNEE CLEARANCE SHALL BE 11 INCHES (279 MM) DEEP MINIMUM AT 9 INCHES (229 MM) ABOVE THE FINISH FLOOR OR GROUND, AND 8 INCHES (203 MM) DEEP MINIMUM AT 27 INCHES (686 MM) ABOVE THE FINISH FLOOR OR GROUND. (11B-306.3.3)

12. WHERE A FORWARD REACH IS UNOBSTRUCTED, THE HIGH FORWARD REACH SHALL BE 48 INCHES (1220 MM) MAXIMUM AND THE LOW FORWARD REACH SHALL BE 15 INCHES (380 MM) MINIMUM ABOVE THE FINISH FLOOR OR GROUND. (11B-308.2.1)

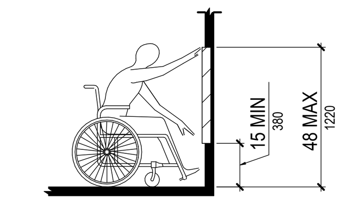

FIGURE 11B-308.2.1 - UNOBSTRUCTED FORWARD REACH

NOAA group architects
4990 N Harbor Drive, Ste 201
San Diego, CA 92106

tel: 619-297-8066
web: www.noaainc.com

LICENSED ARCHITECT
DANUBE TALANT
No. C38946
REN 11/30/2023
STATE OF CALIFORNIA

DO NOT SCALE DRAWINGS.
ANY DISCREPANCIES TO BE REVIEWED WITH THE ARCHITECT.

SAN DIEGO FAMILY DERMATOLOGY

222 W. MADISON AVENUE
EL CAJON, CA 92020

REVISION SCHEDULE

Nº	DATE	ISSUE
1	07/06/2023	1ST CITY REVIEW
2	08/22/2023	2ND CITY REVIEW

Project No: BP-2023-0267
Project Start Date: Issue Date
Drawn: Designer
Checked: Checker
Revision:
Sheet Name:

ADA NOTES

Scale: 1/8" = 1'-0"
Sheet No:

A-013

8/25/2023 10:51:11 AM

13. WHERE A HIGH FORWARD REACH IS OVER AN OBSTRUCTION, THE CLEAR FLOOR SPACE SHALL EXTEND BENEATH THE ELEMENT FOR A DISTANCE NOT LESS THAN THE REQUIRED REACH DEPTH OVER THE OBSTRUCTION. THE HIGH FORWARD REACH SHALL BE 48 INCHES MAX WHERE THE REACH DEPTH IS 20 INCHES MAX. WHERE THE REACH DEPTH EXCEEDS 20 INCHES, THE HIGH FORWARD REACH SHALL BE 44 INCHES MAX AND THE REACH DEPTH SHALL BE 25 INCHES MAX. (11B-308.2.2)

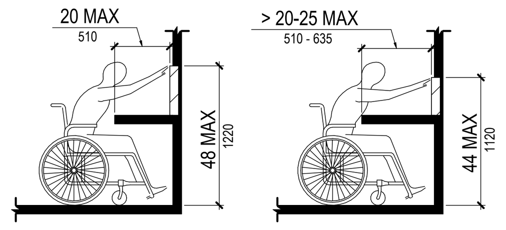

FIGURE 11B-308.2.2 - OBSTRUCTED HIGH FORWARD REACH

14. WHERE A CLEAR FLOOR OR GROUND SPACE ALLOWS A PARALLEL APPROACH TO AN ELEMENT AND THE SIDE REACH IS UNOBSTRUCTED, THE HIGH SIDE REACH SHALL BE 48 INCHES (1220 MM) MAXIMUM AND THE LOW SIDE REACH SHALL BE 15 INCHES (380 MM) MINIMUM ABOVE THE FINISH FLOOR OR GROUND. (11B-308.3.1)

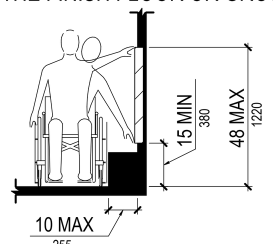

FIGURE 11B-308.3.1 - UNOBSTRUCTED SIDE REACH

15. WHERE A CLEAR FLOOR OR GROUND SPACE ALLOWS A PARALLEL APPROACH TO AN ELEMENT AND THE HIGH SIDE REACH IS OVER AN OBSTRUCTION, THE HEIGHT OF THE OBSTRUCTION SHALL BE 34 INCHES MAXIMUM AND THE DEPTH OF THE OBSTRUCTION SHALL BE 24 INCHES MAXIMUM. THE HIGH SIDE REACH SHALL BE 48 INCHES MAXIMUM FOR A REACH DEPTH OF 10 INCHES MAXIMUM. WHERE THE REACH DEPTH EXCEEDS 10 INCHES, THE HIGH SIDE REACH SHALL BE 46 INCHES MAXIMUM FOR A REACH DEPTH OF 24 INCHES MAXIMUM. (11B-308.3.2)

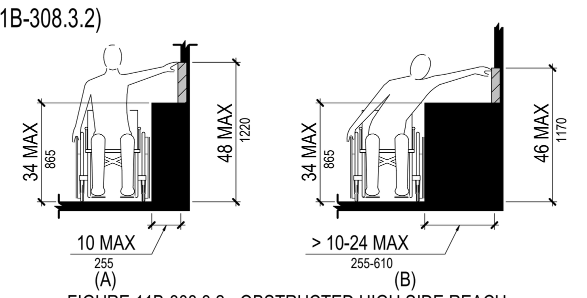

FIGURE 11B-308.3.2 - OBSTRUCTED HIGH SIDE REACH

16. SUGGESTED DIMENSIONS FOR CHILDREN'S USE:

TABLE 11B-308.4

FORWARD OR SIDE REACH	AGES 3 AND 4	AGES 5 THROUGH 8	AGES 9 THROUGH 12
HIGH (MAXIMUM)	36 IN (915 MM)	40 IN (1015 MM)	44 IN (1120 MM)
LOW (MINIMUM)	20 IN (510 MM)	18 IN (455 MM)	16 IN (405 MM)

I. HAZARDS AND PROTRUDING OBJECT

1. OBJECTS WITH LEADING EDGES MORE THAN 27 INCHES (685 MM) AND NOT MORE THAN 80 INCHES (2030 MM) ABOVE THE FINISH FLOOR OR GROUND SHALL PROTRUDE 4 INCHES (100 MM) MAXIMUM HORIZONTALLY INTO THE CIRCULATION PATH. (11B-307.2)
EXCEPTION: HANDRAILS SHALL BE PERMITTED TO PROTRUDE 4 1/2 INCHES MAXIMUM.

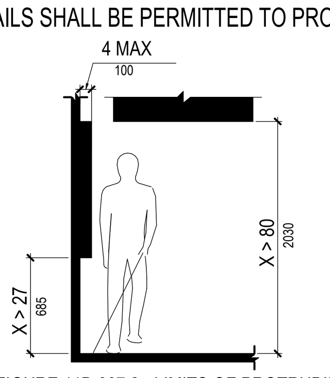

FIGURE 11B-307.2 - LIMITS OF PROTRUDING OBJECTS

2. FREE-STANDING OBJECTS MOUNTED ON POSTS OR PYLONS SHALL OVERHANG CIRCULATION PATHS 12 INCHES MAXIMUM WHEN LOCATED 27 INCHES MINIMUM AND 80 INCHES MAXIMUM ABOVE THE FINISH FLOOR OR GROUND. WHERE A SIGN OR OTHER OBSTRUCTION IS MOUNTED BETWEEN THE POSTS OR PYLONS AND THE CLEAR DISTANCE BETWEEN THE POSTS OR PYLONS IS GREATER THAN 12 INCHES, THE LOWEST EDGE OF SUCH SIGN OR OBSTRUCTION SHALL BE 27 INCHES MAXIMUM OR 80 INCHES MINIMUM ABOVE THE FINISH FLOOR OR GROUND. (11B-307.3)

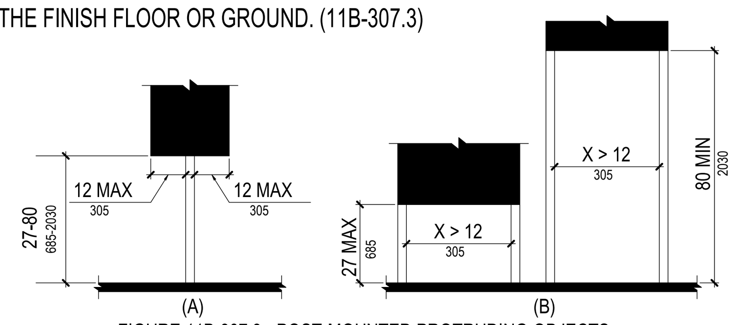

FIGURE 11B-307.3 - POST-MOUNTED PROTRUDING OBJECTS

3. VERTICAL CLEARANCE SHALL BE 80 INCHES HIGH MINIMUM. GUARDRAILS OR OTHER BARRIERS SHALL BE PROVIDED WHERE THE VERTICAL CLEARANCE IS LESS THAN 80 INCHES HIGH. THE LEADING EDGE OF SUCH GUARDRAIL OR BARRIER SHALL BE LOCATED 27 INCHES MAXIMUM ABOVE THE FINISH FLOOR OR GROUND. (11B-307.4)
EXCEPTION: DOOR CLOSERS AND DOOR STOPS SHALL BE PERMITTED TO BE 78 INCHES MINIMUM ABOVE THE FINISH FLOOR OR GROUND.

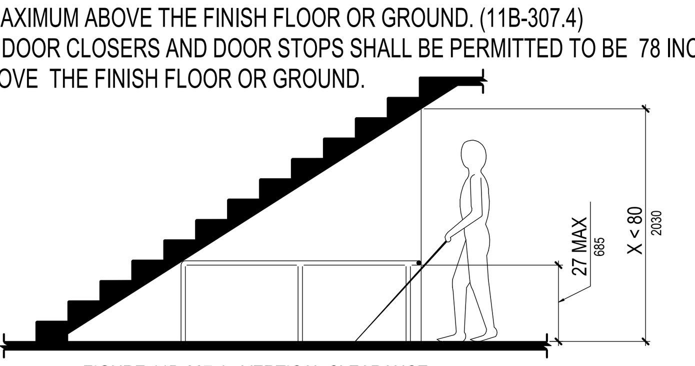

FIGURE 11B-307.4 - VERTICAL CLEARANCE

J. OPERABLE PARTS

1. A CLEAR FLOOR OR GROUND SPACE COMPLYING WITH SECTION 11B-305 SHALL BE PROVIDED. (11B-309.2)

2. OPERABLE PARTS SHALL BE PLACED WITHIN ONE OR MORE OF THE REACH RANGES SPECIFIED IN SECTION 11B-308. (11B-309.3)

3. OPERABLE PARTS SHALL BE OPERABLE WITH ONE HAND AND SHALL NOT REQUIRE TIGHT GRASPING, PINCHING, OR TWISTING OF THE WRIST. THE FORCE REQUIRED TO ACTIVATE OPERABLE PARTS SHALL BE 5 POUNDS (22.2 N) MAXIMUM. (11B-309.4)

K. ELEVATORS

1. ELEVATORS SHALL COMPLY WITH 407 AND WITH ASME A17.1. THEY SHALL BE PASSENGER ELEVATORS AS CLASSIFIED BY ASME A17.1. ELEVATOR OPERATION SHALL BE AUTOMATIC. (11B-407.1)

2. CALL BUTTONS SHALL HAVE SQUARE SHOULDERS, BE 3/4 INCH (19 MM) MINIMUM IN THE SMALLEST DIMENSION AND SHALL BE RAISED 1/8 INCH (3.2 MM) PLUS OR MINUS 1/32 INCH (0.8 MM) ABOVE THE SURROUNDING SURFACE. THE BUTTONS SHALL BE ACTIVATED BY A MECHANICAL MOTION THAT IS DETECTABLE. (11B-407.2.1.2)

3. VISIBLE AND AUDIBLE SIGNAL SHALL BE PROVIDED AT EACH HOISTWAY ENTRANCE TO INDICATE WHICH CAR IS ANSWERING A CALL AND THE CAR'S DIRECTION OF TRAVEL. WHERE IN-CAR SIGNALS ARE PROVIDED, THEY SHALL BE VISIBLE FROM THE FLOOR AREA ADJACENT TO THE HALL CALL BUTTONS. (11B-407.2.2.1)

4. VISIBLE SIGNAL FIXTURES SHALL BE CENTERED AT 72 INCHES (1830 MM) MINIMUM ABOVE THE FINISH FLOOR OR GROUND. THE VISIBLE SIGNAL ELEMENTS SHALL BE 2 1/2 INCHES (64 MM) MINIMUM HIGH BY 2 1/2 INCHES (64 MM) WIDE. SIGNALS SHALL BE VISIBLE FROM THE FLOOR AREA ADJACENT TO THE HALL CALL BUTTON. (11B-407.2.2.2)

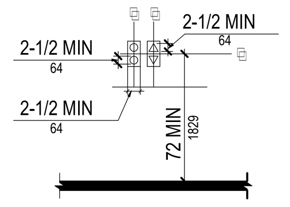

FIGURE 11B-407.2.2.2 - VISIBLE HALL SIGNALS

5. FLOOR DESIGNATIONS COMPLYING WITH SECTION 11B-703.2 AND 11B-703.4.1 SHALL BE PROVIDED ON BOTH JAMBS OF ELEVATOR HOISTWAY ENTRANCES. FLOOR DESIGNATIONS SHALL BE PROVIDED IN BOTH RAISED CHARACTERS AND BRAILLE. RAISED CHARACTERS SHALL BE 2 INCHES (51 MM) HIGH. A RAISED STAR, PLACED TO THE LEFT OF THE FLOOR DESIGNATION, SHALL BE PROVIDED ON BOTH JAMBS AT THE MAIN ENTRY LEVEL THE OUTSIDE DIAMETER OF THE STAR SHALL BE 2 INCHES (51 MM) AND ALL POINTS SHALL BE OF EQUAL LENGTH. RAISED CHARACTERS, INCLUDING THE STAR, SHALL BE WHITE ON A BLACK BACKGROUND. BRAILLE COMPLYING WITH SECTION 11B-703.3 SHALL BE PLACED BELOW THE CORRESPONDING RAISED CHARACTERS AND THE STAR. THE BRAILLE TRANSLATION FOR THE STAR SHALL BE "MAIN". APPLIED PLATES ARE ACCEPTABLE IF THEY ARE PERMANENTLY FIXED TO THE JAMB. (11B-407.2.3.1)

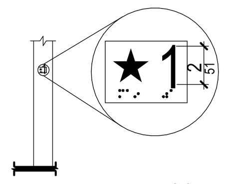

FIGURE 11B-407.2.3.1 - FLOOR DESIGNATIONS ON JAMBS OF ELEVATOR HOISTWAY ENTRANCES

6. ELEVATOR DOORS SHALL BE PROVIDED WITH A REOPENING DEVICE COMPLYING WITH SECTION 11B-407.7.7 THAT SHALL STOP AND REOPEN A CAR DOOR AND HOISTWAY DOOR AUTOMATICALLY IF THE DOOR BECOMES OBSTRUCTED BY AN OBJECT OR PERSON. (11B-407.3.3) THE DEVICE SHALL BE ACTIVATED BY SENSING AN OBSTRUCTION PASSING THROUGH THE OPENING AT 5 INCHES (125 MM) NOMINAL AND 29 INCHES (735 MM) NOMINAL ABOVE THE FINISH FLOOR. (11B-407.3.3.1) DOOR REOPENING DEVICES SHALL REMAIN EFFECTIVE FOR 20 SECONDS MINIMUM. (11B-407.3.3.3)

7. ELEVATOR DOORS SHALL REMAIN FULLY OPEN IN RESPONSE TO A CAR CALL FOR 5 SECONDS MINIMUM. (11B-407.3.5)

8. THE WIDTH OF ELEVATOR DOORS SHALL COMPLY WITH TABLE 11B-407.4.1. (11B-407.3.6)

9. INSIDE DIMENSIONS OF ELEVATOR CARS AND CLEAR WIDTH OF ELEVATOR DOORS SHALL COMPLY WITH TABLE 11B-407.4.1. (11B-407.4.1)

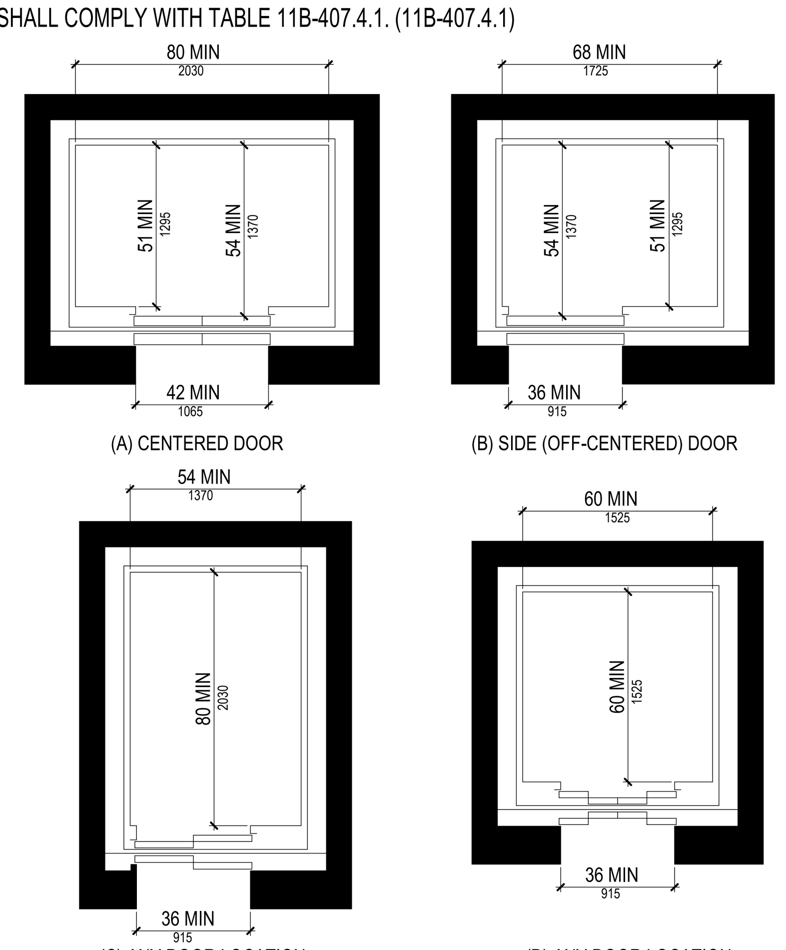

FIGURE 11B-407.4.1 - ELEVATOR CAR DIMENSIONS

10. THE CLEARANCE BETWEEN THE CAR PLATFORM SILL AND THE EDGE OF ANY HOISTWAY LANDING SHALL BE 1-1/4 INCH (32 MM) MAXIMUM. (11B-407.4.3)

11. EACH CAR SHALL BE EQUIPPED WITH A SELF-LEVELING FEATURE THAT WILL AUTOMATICALLY BRING AND MAINTAIN THE CAR AT FLOOR LANDINGS WITHIN A TOLERANCE OF 1/2 INCH (13 MM) UNDER RATED LOADING TO ZERO LOADING CONDITIONS. (11B-407.4.4)

12. THE LEVEL OF ILLUMINATION AT THE CAR CONTROLS, PLATFORM, CAR THRESHOLD AND CAR LANDING SILL SHALL BE 5 FOOT CANDLES (54 LUX) MINIMUM. (11B-407.4.5)

13. CONTROLS SHALL BE LOCATED WITHIN ONE OF THE REACH RANGES SPECIFIED IN SECTION 11B-308. (11B-407.4.6.1)

14. EMERGENCY CONTROL BUTTONS SHALL HAVE THEIR CENTERLINES 35 INCHES (890 MM) MINIMUM ABOVE THE FINISH FLOOR. (11B-407.4.6.4.1)

15. CONTROL BUTTONS SHALL BE IDENTIFIED BY RAISED CHARACTERS OR SYMBOLS, WHITE ON A BLACK BACKGROUND, COMPLYING WITH SECTION 11B-703.2 AND BRAILLE COMPLYING WITH 11B-703.3. (11B-407.4.7.1.1)

16. THE CONTROL BUTTON FOR THE EMERGENCY STOP, ALARM, DOOR OPEN, DOOR CLOSE, MAIN ENTRY FLOOR, AND PHONE, SHALL BE IDENTIFIED WITH RAISED SYMBOLS AND BRAILLE. (11B-407.4.7.1.3)

17. AUDIBLE AND VISIBLE CAR POSITIONS INDICATORS SHALL BE PROVIDED IN ELEVATOR CARS (11B-407.4.8)

18. CHARACTERS SHALL BE 1/2 INCH (13 MM) HIGH MINIMUM. (11B-407.4.8.1.1)

19. AUDIBLE INDICATORS SHALL COMPLY WITH SECTION 11B-407.4.8.2. (11B-407.4.8.2) THE VERBAL ANNUNCIATOR SHALL BE 10 dB MINIMUM ABOVE AMBIENT, BUT SHALL NOT EXCEED 80 dB, MEASURED AT THE ANNUNCIATOR. 11B-407.4.8.2.2 THE VERBAL ANNUNCIATOR SHALL HAVE A FREQUENCY OF 300 Hz MINIMUM TO 3000 Hz MAXIMUM. (11B-407.4.8.2.3)

L. STAIRWAYS

1. ALL STEPS ON A FLIGHT OF STAIRS SHALL HAVE UNIFORM RISER HEIGHTS AND UNIFORM TREAD DEPTHS. RISERS SHALL BE 4 INCHES (100 MM) HIGH MINIMUM AND 7 INCHES (180 MM) HIGH MAXIMUM. TREADS SHALL BE 11 INCHES (280 MM) DEEP MINIMUM. (11B-504.2)

2. OPEN RISERS ARE NOT PERMITTED. (11B-504.3)

3. STAIR TREADS SHALL COMPLY WITH SECTION 11B-302. CHANGES IN LEVEL ARE NOT PERMITTED. (11B-504.4)

4. INTERIOR STAIRS SHALL HAVE THE UPPER APPROACH AND THE LOWER TREAD MARKED BY A STRIPE PROVIDING CLEAR VISUAL CONTRAST. EXTERIOR STAIRS SHALL HAVE THE UPPER APPROACH AND ALL TREADS MARKED BY A STRIPE PROVIDING CLEAR VISUAL CONTRAST. THE STRIPE SHALL BE A MINIMUM OF 2 INCHES WIDE TO A MAXIMUM OF 4 INCHES PLACED PARALLEL TO, AND NOT MORE THAN 1 INCH FROM THE NOSE OF THE STEP OR UPPER APPROACH. THE STRIPE SHALL EXTEND THE FULL WIDTH OF THE STEP OR UPPER APPROACH AND SHALL BE OF MATERIAL THAT IS AT LEAST AS SLIP RESISTANT AS THE OTHER TREADS OF THE STAIR. A PAINTED STRIPE SHALL BE ACCEPTABLE, BUT GROOVES SHALL NOT BE USED. TO SATISFY THIS REQUIREMENT. (11B-504.4.1)

5. THE RADIUS OF CURVATURE AT THE LEADING EDGE OF THE TREAD SHALL BE 1/2 INCH (13 MM) MAXIMUM. NOSINGS THAT PROJECT BEYOND RISERS SHALL HAVE THE UNDERSIDE OF THE LEADING EDGE CURVED OR BEVELED. RISERS SHALL BE PERMITTED TO SLOPE UNDER THE TREAD AT AN ANGLE OF 30 DEGREES MAXIMUM FROM VERTICAL. THE PERMITTED PROJECTION OF THE NOSING SHALL EXTEND 1 1/4 INCHES (32 MM) MAXIMUM OVER THE TREAD BELOW. (11B-504.5)

6. STAIR TREADS AND LANDINGS SUBJECT TO WET CONDITIONS SHALL BE DESIGNED TO PREVENT THE ACCUMULATION OF WATER. (11B-504.7)

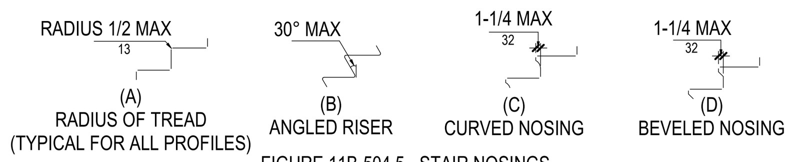

FIGURE 11B-504.5 - STAIR NOSINGS

M. HANDRAILS

1. STAIRS SHALL HAVE HANDRAILS COMPLYING WITH SECTION 11B-505. (11B-504.6)

2. HANDRAILS SHALL BE PROVIDED ON BOTH SIDES OF STAIRS AND RAMPS. (11B-505.2)

3. HANDRAILS SHALL BE CONTINUOUS WITHIN THE FULL LENGTH OF EACH STAIR FLIGHT OR RAMP RUN. INSIDE HANDRAILS ON SWITCHBACK OR DOGLEG STAIRS AND RAMPS SHALL BE CONTINUOUS BETWEEN FLIGHTS OR RUNS. (11B-505.3)

4. TOP OF GRIPPING SURFACES OF HANDRAILS SHALL BE 34 INCHES (865 MM) MINIMUM AND 38 INCHES (965 MM) MAXIMUM VERTICALLY ABOVE WALKING SURFACES, STAIR NOSINGS, AND RAMP SURFACES. HANDRAILS SHALL BE AT A CONSISTENT HEIGHT ABOVE WALKING SURFACES, STAIR NOSINGS, AND RAMP SURFACES. (11B-505.4)

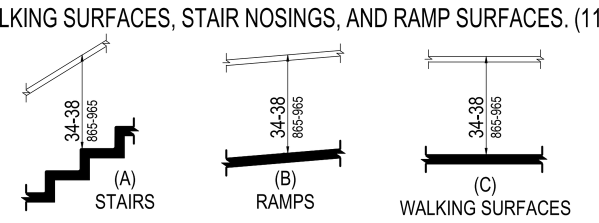

FIGURE 11B-505.4 - HANDRAIL HEIGHT

5. CLEARANCE BETWEEN HANDRAIL GRIPPING SURFACES AND ADJACENT SURFACES SHALL BE 1 1/2 INCHES (38 MM) MINIMUM. HANDRAILS MAY BE LOCATED IN A RECESS IF THE RECESS IS 3 INCHES (76 MM) MAXIMUM DEEP AND 18 INCHES (457 MM) MINIMUM CLEAR ABOVE THE TOP OF THE HANDRAIL. (11B-505.5)

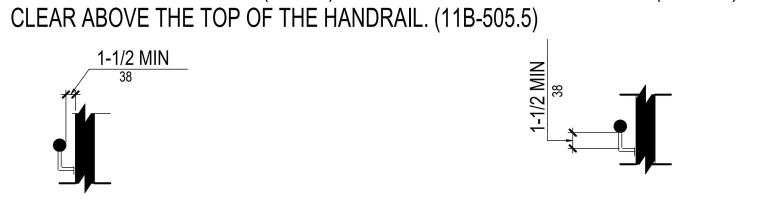

FIGURE 11B-505.5
HANDRAIL CLEARANCE

FIGURE 11B-505.6
HORIZONTAL PROJECTIONS BELOW GRIPPING SURFACE

6. HANDRAIL GRIPPING SURFACES SHALL BE CONTINUOUS ALONG THEIR LENGTH AND SHALL NOT BE OBSTRUCTED ALONG THEIR TOPS OR SIDES. THE BOTTOMS OF HANDRAIL GRIPPING SURFACES SHALL NOT BE OBSTRUCTED FOR MORE THAN 20 PERCENT OF THEIR LENGTH. WHERE PROVIDED, HORIZONTAL PROJECTIONS SHALL OCCUR 1 1/2 INCHES (38 MM) MINIMUM BELOW THE BOTTOM OF THE HANDRAIL GRIPPING SURFACE. (11B-505.6)

7. HANDRAIL GRIPPING SURFACES WITH A CIRCULAR CROSS SECTION SHALL HAVE AN OUTSIDE DIAMETER OF 1 1/4 INCHES (32 MM) MINIMUM AND 2 INCHES (51 MM) MAXIMUM. (11B-505.7.1) HANDRAIL GRIPPING SURFACES WITH A NON-CIRCULAR CROSS SECTION SHALL HAVE A PERIMETER DIMENSION OF 4 INCHES (100 MM) MINIMUM AND 6 1/4 INCHES (160 MM) MAXIMUM, AND A CROSS- SECTION DIMENSION OF 2 1/4 INCHES (57 MM) MAXIMUM. (11B-505.7.2)

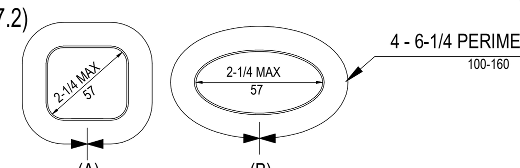

FIGURE 11B-505.7.2 - HANDRAIL NON-CIRCULAR CROSS SECTION

8. HANDRAIL GRIPPING SURFACES AND ANY SURFACES ADJACENT TO THEM SHALL BE FREE OF SHARP OR ABRASIVE ELEMENTS AND SHALL HAVE ROUNDED EDGES. (11B-505.8)

9. HANDRAILS SHALL NOT ROTATE WITHIN THEIR FITTINGS. (11B-505.9)

10. RAMP HANDRAILS SHALL EXTEND HORIZONTALLY ABOVE THE LANDING FOR 12 INCHES (305 MM) MINIMUM BEYOND THE TOP AND BOTTOM OF RAMP RUNS. EXTENSIONS SHALL RETURN TO A WALL, GUARD, OR THE LANDING SURFACE, OR SHALL BE CONTINUOUS TO THE HANDRAIL OF AN ADJACENT RAMP RUN. (11B-505.10.1)

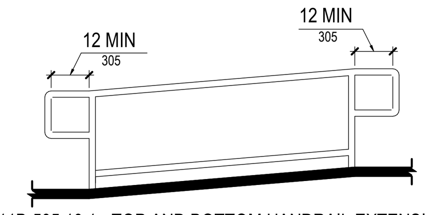

FIGURE 11B-505.10.1 - TOP AND BOTTOM HANDRAIL EXTENSION AT RAMPS

11. AT THE TOP OF A STAIR FLIGHT, HANDRAILS SHALL EXTEND HORIZONTALLY ABOVE THE LANDING FOR 12 INCHES (305 MM) MINIMUM BEGINNING DIRECTLY ABOVE THE FIRST RISER NOSING. EXTENSIONS SHALL RETURN TO A WALL, GUARD, OR THE LANDING SURFACE, OR SHALL BE CONTINUOUS TO THE HANDRAIL OF AN ADJACENT STAIR FLIGHT. (11B-505.10.2)

12. AT THE BOTTOM OF A STAIR FLIGHT, HANDRAILS SHALL EXTEND AT THE SLOPE OF THE STAIR FLIGHT FOR A HORIZONTAL DISTANCE EQUAL TO ONE TREAD DEPTH BEYOND THE LAST RISER NOSING. THE HORIZONTAL EXTENSION OF A HANDRAIL SHALL BE 12 INCHES (305 MM) LONG MINIMUM AND A HEIGHT EQUAL TO THAT OF THE SLOPING PORTION OF THE HANDRAIL AS MEASURED ABOVE THE STAIR NOSINGS. EXTENSION SHALL RETURN TO A WALL, GUARD, OR THE LANDING SURFACE, OR SHALL BE CONTINUOUS TO THE HANDRAIL OF AN ADJACENT STAIR FLIGHT. (11B-505.10.3)

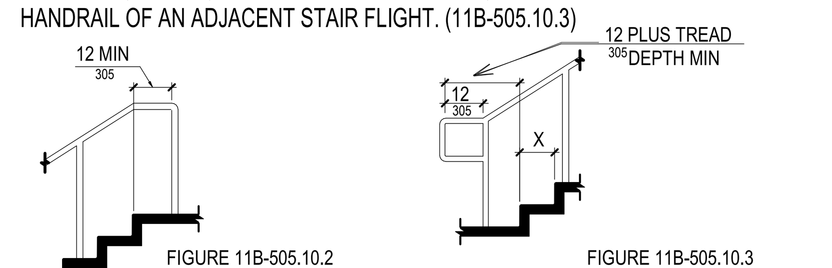

FIGURE 11B-505.10.2
TOP HANDRAIL EXTENSION AT STAIRS

FIGURE 11B-505.10.3
BOTTOM HANDRAIL EXTENSION AT STAIRS

N. PARKING

1. PARKING SPACES COMPLYING WITH SECTION 11B-502 SHALL BE PROVIDED IN ACCORDANCE WITH TABLE 11B-208.2 EXCEPT AS REQUIRED BY SECTIONS 11B-208.2.1, 11B-208.2.2, AND 11B-208.2.3. WHERE MORE THAN ONE PARKING FACILITY IS PROVIDED ON A SITE, THE NUMBER OF ACCESSIBLE SPACES PROVIDED ON THE SITE SHALL BE CALCULATED ACCORDING TO THE NUMBER OF SPACES REQUIRED FOR EACH PARKING FACILITY. (11B-208.2)

2. WHERE AT LEAST ONE PARKING SPACE IS PROVIDED FOR EACH RESIDENTIAL DWELLING UNIT, AT LEAST ONE PARKING SPACE COMPLYING WITH SECTION 11B-502 SHALL BE PROVIDED FOR EACH RESIDENTIAL DWELLING UNIT REQUIRED TO PROVIDE MOBILITY FEATURES COMPLYING WITH SECTIONS 11B-809.2 THROUGH 11B-809.4. WHERE FEWER THAN ONE PARKING SPACE IS PROVIDED FOR EACH RESIDENTIAL DWELLING UNIT, PARKING SPACES COMPLYING WITH SECTION 11B-502 SHALL BE PROVIDED IN ACCORDANCE WITH TABLE 11B-208.2. (11B-208.2.3.1)

3. WHERE THE TOTAL NUMBER OF PARKING SPACES PROVIDED FOR EACH RESIDENTIAL DWELLING UNIT EXCEEDS ONE PARKING SPACE PER RESIDENTIAL DWELLING UNIT, 2 PERCENT, BUT NO FEWER THAN ONE SPACE, OF ALL THE PARKING SPACES NOT COVERED BY SECTION 11B-208.2.3.1 SHALL COMPLY WITH SECTION 11B-502. (11B-208.2.3.2)

4. WHERE PARKING SPACES ARE PROVIDED FOR PERSONS OTHER THAN RESIDENTS, PARKING SHALL BE PROVIDED IN ACCORDANCE WITH TABLE 11B-208.2. (11B-208.2.3.3)

5. WHEN ASSIGNED PARKING IS PROVIDED, CHAPTER 11A INDICATES DESIGNATED ACCESSIBLE PARKING FOR THE ADAPTABLE RESIDENTIAL DWELLING UNITS SHALL BE PROVIDED ON REQUESTS OF RESIDENTS WITH DISABILITIES ON THE SAME TERMS AND WITH THE FULL RANGE OF CHOICES (E.G., OFF-STREET PARKING, CARPORT OR GARAGE) THAT ARE AVAILABLE TO OTHER RESIDENTS.

6. FOR EVERY SIX OR FRACTION OF SIX PARKING SPACES REQUIRED BY SECTION 11B-208.2 TO COMPLY WITH SECTION 11B-502, AT LEAST ONE SHALL BE A VAN PARKING SPACE COMPLYING WITH SECTION 11B-502. (11B-208.2.4)

7. PARKING SPACES COMPLYING WITH SECTION 11B-502 THAT SERVE A PARTICULAR BUILDING OR FACILITY SHALL BE LOCATED ON THE SHORTEST ACCESSIBLE ROUTE FROM PARKING TO AN ENTRANCE COMPLYING WITH SECTION 11B-206.4. WHERE PARKING SERVES MORE THAN ONE ACCESSIBLE ENTRANCE, PARKING SPACES COMPLYING WITH SECTION 11B-502 SHALL BE DISPERSED AND LOCATED ON THE SHORTEST ACCESSIBLE ROUTE TO THE ACCESSIBLE ENTRANCES. IN PARKING FACILITIES THAT DO NOT SERVE A PARTICULAR BUILDING OR FACILITY, PARKING SPACES COMPLYING WITH SECTION 11B-502 SHALL BE LOCATED ON THE SHORTEST ACCESSIBLE ROUTE TO AN ACCESSIBLE PEDESTRIAN ENTRANCE OF THE PARKING FACILITY. (11B-208.3.1)
EXCEPTIONS:
1. ALL VAN PARKING SPACES SHALL BE PERMITTED TO BE GROUPED ON ONE LEVEL WITHIN A MULTI-STORY PARKING FACILITY.
2. PARKING SPACES SHALL BE PERMITTED TO BE LOCATED IN DIFFERENT PARKING FACILITIES IF SUBSTANTIALLY EQUIVALENT OR GREATER ACCESSIBILITY IS PROVIDED IN TERMS OF DISTANCE FROM AN ACCESSIBLE ENTRANCE OR ENTRANCES, PARKING FEE, AND USER CONVENIENCE.

8. IN RESIDENTIAL FACILITIES CONTAINING RESIDENTIAL DWELLING UNITS REQUIRED TO PROVIDE MOBILITY FEATURES COMPLYING WITH SECTIONS 11B-809.2 THROUGH 11B-809.4, AND ADAPTABLE FEATURES COMPLYING WITH CHAPTER 11A, DIVISION IV, PARKING SPACES PROVIDED IN ACCORDANCE WITH SECTION 11B-208.2.3.1 SHALL BE LOCATED ON THE SHORTEST ACCESSIBLE ROUTE TO THE RESIDENTIAL DWELLING UNIT ENTRANCE THEY SERVE. SPACES PROVIDED IN ACCORDANCE WITH SECTION 11B-208.2.3.2 SHALL BE DISPERSED THROUGHOUT ALL TYPES OF PARKING PROVIDED FOR THE RESIDENTIAL DWELLING UNITS. (11B-208.3.2)
EXCEPTION: PARKING SPACES PROVIDED IN ACCORDANCE WITH SECTION 11B-208.2.3.2 SHALL NOT BE REQUIRED TO BE DISPERSED THROUGHOUT ALL TYPES OF PARKING IF SUBSTANTIALLY EQUIVALENT OR GREATER ACCESSIBILITY IS PROVIDED IN TERMS OF DISTANCE FROM AN ACCESSIBLE ENTRANCE, PARKING FEE, AND USER CONVENIENCE.

TABLE 11B-208.2 PARKING SPACES

TOTAL NUMBER OF PARKING SPACES PROVIDED IN PARKING FACILITY	MINIMUM NUMBER OF REQUIRED ACCESSIBLE PARKING SPACES
1 TO 25	1
26 TO 50	2
51 TO 75	3
76 TO 100	4
101 TO 150	5
151 TO 200	6
201 TO 300	7
301 TO 400	8
401 TO 500	9
501 TO 1000	2% OF TOTAL
1001 AND OVER	20, PLUS 1 FOR EACH 100, OR FRACTION THEREOF, OVER 1000

9. WHERE PARKING SPACES ARE MARKED WITH LINES, WIDTH MEASUREMENTS OF PARKING SPACES AND ACCESS AISLES SHALL BE MADE FROM THE CENTERLINE OF THE MARKINGS. (11B-502.1)

EXCEPTION: WHERE PARKING SPACES OR ACCESS AISLES ARE NOTE ADJACENT TO ANOTHER PARKING SPACE OR ACCESS AISLE, MEASUREMENTS SHALL BE PERMITTED TO INCLUDE THE FULL WIDTH OF THE LINE DEFINING THE PARKING SPACE OR ACCESS AISLE

10. CAR AND VAN PARKING SPACES SHALL BE 216 INCHES (5486 MM) LONG MINIMUM. CAR PARKING SPACES SHALL BE 108 INCHES (2743 MM) WIDE MINIMUM AND VAN PARKING SPACES SHALL BE 144 INCHES (3658) WIDE MINIMUM, SHALL BE MARKED TO DEFINE THE WIDTH, AND SHALL HAVE AN ADJACENT ACCESS AISLE COMPLYING WITH SECTION 11B-502.3. (11B-502.2)

EXCEPTION: VAN PARKING SPACES SHALL BE PERMITTED TO BE 108 INCHES (2743 MM) WIDE MINIMUM WHERE THE ACCESS AISLE IS 96 INCHES (2440 MM) WIDE MINIMUM.

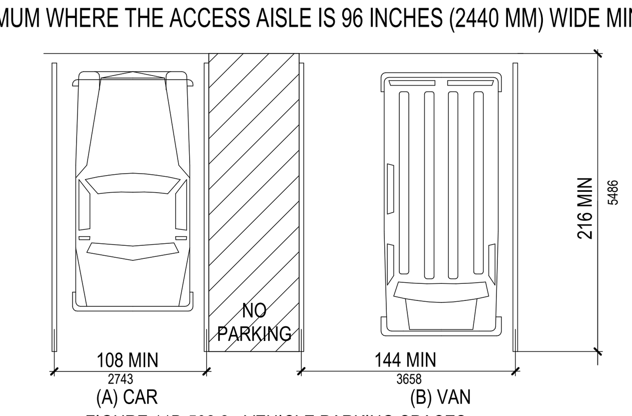

FIGURE 11B-502.2 - VEHICLE PARKING SPACES

11. ACCESS AISLES SHALL ADJOIN AN ACCESSIBLE ROUTE. TWO PARKING SPACES SHALL BE PERMITTED TO SHARE A COMMON ACCESS AISLE. (11B-502.3)

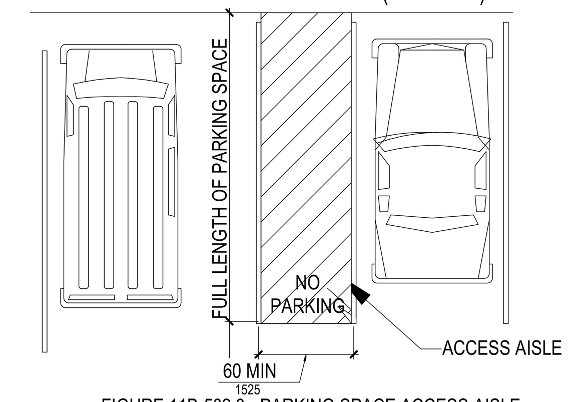

FIGURE 11B-502.3 - PARKING SPACE ACCESS AISLE

12. ACCESS AISLES SERVING CAR AND VAN PARKING SPACES SHALL BE 60 INCHES (1525 MM) WIDE MINIMUM. (11B-502.3.1)

13. ACCESS AISLES SHALL EXTEND THE FULL REQUIRED LENGTH OF THE PARKING SPACES THEY SERVE. (11B-502.3.2)

14. ACCESS AISLES SHALL BE MARKED WITH A BLUE PAINTED BORDERLINE AROUND THE PERIMETER. THE AREA WITHIN THE BLUE BORDERLINES SHALL BE MARKED WITH HATCHED LINES A MAXIMUM OF 36 INCHES ON CENTER IN A COLOR CONTRASTING WITH THAT OF THE AISLE SURFACE, PREFERABLY BLUE OR WHITE. THE WORDS "NO PARKING" SHALL BE PAINTED ON THE SURFACE WITHIN EACH ACCESS AISLE IN WHITE LETTERS A MINIMUM OF 12 INCHES IN HEIGHT AND LOCATED TO BE VISIBLE FROM THE ADJACENT VEHICULAR WAY. ACCESS AISLE MARKINGS MAY EXTEND BEYOND THE MINIMUM REQUIRED LENGTH. (11B-502.3.3)

15. ACCESS AISLES SHALL NOT OVERLAP THE VEHICULAR WAY. ACCESS AISLES SHALL BE PERMITTED TO BE PLACED ON EITHER SIDE OF THE PARKING SPACE EXCEPT FOR VAN PARKING SPACES WHICH SHALL HAVE ACCESS AISLES LOCATED ON THE PASSENGER SIDE OF THE PARKING SPACES. (11B-502.3.4)

16. PARKING SPACES AND ACCESS AISLES SERVING THEM SHALL COMPLY WITH SECTION 11B-302. ACCESS AISLES SHALL BE AT THE SAME LEVEL AS THE PARKING SPACES THEY SERVE. CHANGES IN LEVEL ARE NOT PERMITTED. (11B-502.4)
EXCEPTION: SLOPES NOT STEEPER THAN I :48 SHALL BE PERMITTED.

17. PARKING SPACES, ACCESS AISLES AND VEHICULAR ROUTES SERVING THEM SHALL PROVIDE A VERTICAL CLEARANCE OF 98 INCHES (2490 MM) MINIMUM. (11B-502.5)

18. PARKING SPACE IDENTIFICATION SIGNS SHALL INCLUDE THE INTERNATIONAL SYMBOL OF ACCESSIBILITY COMPLYING WITH SECTION 11B-703.7.2.1 IN WHITE ON A BLUE BACKGROUND. SIGNS IDENTIFYING VAN PARKING SPACES SHALL CONTAIN ADDITIONAL LANGUAGE OR AN ADDITIONAL SIGN WITH THE DESIGNATION "VAN ACCESSIBLE". SIGNS SHALL BE 60 INCHES (1524 MM) MINIMUM ABOVE THE FINISH FLOOR OR GROUND SURFACE MEASURED TO THE BOTTOM OF THE SIGN. (11B-502.6)
EXCEPTION: SIGNS LOCATED WITHIN A CIRCULATION PATH SHALL BE A MINIMUM OF 80 INCHES (2032 MM) ABOVE THE FINISH FLOOR OR GROUND SURFACE MEASURED TO THE BOTTOM OF THE SIGN.

19. PARKING IDENTIFICATION SIGNS SHALL BE REFLECTORIZED WITH A MINIMUM AREA OF 70 SQUARE INCHES (45,161 MM2). (11B-502.6.1)

20. ADDITIONAL LANGUAGE OR AN ADDITIONAL SIGN BELOW THE INTERNATIONAL SYMBOL OF ACCESSIBILITY SHALL STATE "MINIMUM FINE $250". (11B-502.6.2)

21. A PARKING SPACE IDENTIFICATION SIGN SHALL BE VISIBLE FROM EACH PARKING SPACE. SIGNS SHALL BE PERMANENTLY POSTED EITHER IMMEDIATELY ADJACENT TO THE PARKING SPACE OR WITHIN THE PROJECTED PARKING SPACE WIDTH AT THE HEAD END OF THE PARKING SPACE. SIGNS MAY ALSO BE PERMANENTLY POSTED ON A WALL AT THE INTERIOR END OF THE PARKING SPACE. (11B-502.6.3)

22. EACH ACCESSIBLE CAR AND VAN SPACE SHALL HAVE SURFACE IDENTIFICATION COMPLYING WITH EITHER SECTION 11B-502.6.4.1 OR 11B-502.6.4.2. (11B-502.6.4)

23. THE PARKING SPACE SHALL BE MARKED WITH AN INTERNATIONAL SYMBOL OF ACCESSIBILITY COMPLYING WITH SECTION 11B-703.7.2.1 IN WHITE ON A BLUE BACKGROUND A MINIMUM 36 INCHES WIDE BY 36 INCHES HIGH (914 MM BY 914 MM). THE CENTERLINE OF THE INTERNATIONAL SYMBOL OF ACCESSIBILITY SHALL BE A MAXIMUM OF 6 INCHES (152 MM) FROM THE CENTERLINE OF THE PARKING SPACE, ITS SIDES PARALLEL TO THE LENGTH OF THE PARKING SPACE AND ITS LOWER CORNER AT, OR LOWER SIDE ALIGNED WITH, THE END OF THE PARKING SPACE LENGTH. (11B-502.6.4.1)

24. THE PARKING SPACE SHALL BE OUTLINED IN BLUE OR PAINTED BLUE AND SHALL BE MARKED WITH AN INTERNATIONAL SYMBOL OF ACCESSIBILITY COMPLYING WITH SECTION 11B-703.7.2.1 A MINIMUM 36 INCHES WIDE BY 36 INCHES HIGH (914 MM BY 914 MM) IN WHITE OR A SUITABLE CONTRASTING COLOR. THE CENTERLINE OF THE INTERNATIONAL SYMBOL OF ACCESSIBILITY SHALL BE A MAXIMUM OF 6 INCHES (152 MM) FROM THE CENTERLINE OF THE PARKING SPACE, ITS SIDES PARALLEL TO THE LENGTH OF THE PARKING SPACE AND ITS LOWER CORNER AT, OR LOWER SIDE ALIGNED WITH, THE END OF THE PARKING SPACE LENGTH. (11B-502.6.4.2)

NOAA group architects
4990 N Harbor Drive, Ste 201
San Diego, CA 92106

tel: 619-297-8066
web: www.noaainc.com

DO NOT SCALE DRAWINGS.
ANY DISCREPANCIES TO BE REVIEWED WITH THE ARCHITECT.

SAN DIEGO FAMILY DERMATOLOGY

222 W. MADISON AVENUE
EL CAJON, CA 92020

REVISION SCHEDULE

Nº	DATE	ISSUE
1	07/06/2023	1ST CITY REVIEW
2	08/22/2023	2ND CITY REVIEW

Project No:	BP-2023-0267
Project Start Date:	Issue Date
Drawn:	Designer
Checked:	Checker
Revision:	

Sheet Name:

ADA NOTES

Scale: 1/8" = 1'-0"

Sheet No:

A-014

8/25/2023 10:51:12 AM

25. PARKING SPACES AND ACCESS AISLES SHALL BE DESIGNED SO THAT CARS AND VANS, WHEN PARKED, CANNOT OBSTRUCT THE REQUIRED CLEAR WIDTH OF ADJACENT ACCESSIBLE ROUTES. (11B-502.7)

26. PARKING SPACES AND ACCESS AISLES SHALL BE DESIGNED SO THAT PERSONS USING THEM ARE NOT REQUIRED TO TRAVEL BEHIND PARKING SPACES OTHER THAN TO PASS BEHIND THE PARKING SPACE IN WHICH THEY PARK (11B-502.7.1)

27. A CURB OR WHEEL STOP SHALL BE PROVIDED IF REQUIRED TO PREVENT ENCROACHMENT OF VEHICLES OVER THE REQUIRED CLEAR WIDTH OF ADJACENT ACCESSIBLE ROUTES. (11B-502.7.2)

28. AN ADDITIONAL SIGN SHALL BE POSTED EITHER; 1) IN A CONSPICUOUS PLACE AT EACH ENTRANCE TO AN OFF-STREET PARKING FACILITY OR 2) IMMEDIATELY ADJACENT TO ON-SITE ACCESSIBLE PARKING AND VISIBLE FROM EACH PARKING SPACE. (11B-502.8) THE ADDITIONAL SIGN SHALL BE LESS THAN 17 INCHES WIDE BY 22 INCHES HIGH. (11B-502.8.1) THE ADDITIONAL SIGN SHALL CLEARLY STATE IN LETTERS WITH A MINIMUM HEIGHT OF 1 INCH THE FOLLOWING: "UNAUTHORIZED" VEHICLES PARKED IN DESIGNATED ACCESSIBLE SPACES NOT DISPLAYING DISTINGUISHING PLACARDS OR SPECIAL LICENSE PLATES ISSUED FOR PERSONS WITH DISABILITIES WILL BE TOWED AWAY AT THE OWNER'S EXPENSE. TOWED VEHICLES MAY BE RECLAIMED AT: ________ OR BY TELEPHONING ________" BLANK SPACES SHALL BE FILLED IN WITH APPROPRIATE INFORMATION AS A PERMANENT PART OF THE SIGN. (11B-502.8.2)

29. PASSENGER DROP OFF AND LOADING ZONES SHALL PROVIDE A VEHICULAR PULL-UP SPACE 96 INCHES (2440 MM) WIDE MINIMUM AND 20 FEET (6096 MM) LONG MINIMUM. (11B-503.2)

30. PASSENGER DROP OFF AND LOADING ZONES SHALL PROVIDE ACCESS AISLES COMPLYING WITH SECTION 11B-503 ADJACENT AND PARALLEL TO THE VEHICLE PULL-UP SPACE. ACCESS AISLES SHALL ADJOIN AN ACCESSIBLE ROUTE AND SHALL NOT OVERLAP THE VEHICULAR WAY. (11B-503.3)

31. ACCESS AISLES SERVING VEHICLE PULL-UP SPACES SHALL BE 60 INCHES (1525 MM) WIDE MINIMUM. (I I B-503.3.I) ACCESS AISLES SHALL EXTEND THE FULL LENGTH OF THE VEHICLE PULL-UP SPACES THEY SERVE. (I I B-503.3.2) ACCESS AISLES SHALL BE MARKED WITH A PAINTED BORDERLINE AROUND THEIR PERIMETER. THE AREA WITHIN THE BORDERLINES SHALL BE MARKED WITH HATCHED LINES A MAXIMUM OF 36 INCHES ON CENTER IN A COLOR CONTRASTING WITH THAT OF THE AISLE SURFACE. (11B-503.3.3)

32. VEHICLE PULL-UP SPACES AND ACCESS AISLES SERVING THEM SHALL COMPLY WITH SECTION 11B-302. ACCESS AISLES SHALL BE AT THE SAME LEVEL AS THE VEHICLE PULL-UP SPACE THEY SERVE. CHANGES IN LEVEL ARE NOT PERMITTED. (11B-503.4) EXCEPTION: SLOPES NOT STEEPER THAN 1:48 SHALL BE PERMITTED.

33. VEHICLE PULL-UP SPACES, ACCESS AISLES SERVING THEM, AND A VEHICULAR ROUTE FROM AN ENTRANCE TO THE PASSENGER DROP OFF AND LOADING ZONE AND FROM THE PASSENGER DROP OFF AND LOADING ZONE TO A VEHICULAR EXIT SHALL PROVIDE A VERTICAL CLEARANCE OF 114 INCHES (2895 MM) MINIMUM. (11B-503.5)

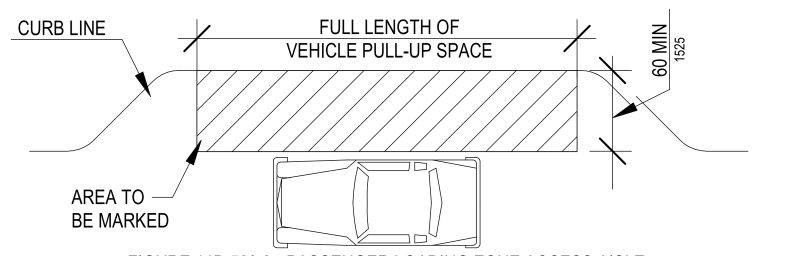

FIGURE 11B-503.3 - PASSENGER LOADING ZONE ACCESS AISLE

O. DRINKING FOUNTAINS

1. NO FEWER THAN TWO DRINKING FOUNTAINS SHALL BE PROVIDED. WHEN PROVIDED, ONE DRINKING FOUNTAIN SHALL COMPLY WITH SECTIONS 11B-602.1 THROUGH 11B-602.6, 11B-602.8 AND 11B-602.9 AND ONE DRINKING FOUNTAIN SHALL COMPLY WITH SECTIONS 11B-602.7 AND 11B-602.9. (11B-211.2) EXCEPTION: WHERE A SINGLE DRINKING FOUNTAIN COMPLIES WITH SECTIONS 11B-602.1 THROUGH 11B-602.9, IT SHALL BE PERMITTED TO BE SUBSTITUTED FOR TWO SEPARATE DRINKING FOUNTAINS.

2. WHERE MORE THAN THE MINIMUM NUMBER OF DRINKING FOUNTAINS SPECIFIED IN SECTION 11B-211.2 ARE PROVIDED, 50 PERCENT OF THE TOTAL NUMBER OF DRINKING FOUNTAINS PROVIDED SHALL COMPLY WITH SECTIONS 11B-602.1 THROUGH 11B-602.6, 11B-602.8 AND 11B-602.9, AND 50 PERCENT OF THE TOTAL NUMBER OF DRINKING FOUNTAINS PROVIDED SHALL COMPLY WITH SECTIONS 11B-602.7 AND 11B-602.9. (11B-211.3) EXCEPTION: WHERE 50 PERCENT OF THE DRINKING FOUNTAINS YIELDS A FRACTION, 50 PERCENT SHALL BE PERMITTED TO BE ROUNDED UP OR DOWN PROVIDED THAT THE TOTAL NUMBER OF DRINKING FOUNTAINS COMPLYING WITH SECTION 11B-211 EQUALS 100 PERCENT OF DRINKING FOUNTAINS

3. DRINKING FOUNTAINS SHALL HAVE A CLEAR FLOOR OR GROUND SPACE COMPLYING WITH SECTION 11B-305 POSITIONED FOR A FORWARD APPROACH AND CENTERED ON THE UNIT. KNEE AND TOE CLEARANCE COMPLYING WITH SECTION 11B-306 SHALL BE PROVIDED. (11B-602.2) EXCEPTION: A PARALLEL APPROACH COMPLYING WITH SECTION 11B-305 SHALL BE PERMITTED AT UNITS FOR CHILDREN'S USE WHERE THE SPOUT IS 30 INCHES (760 MM) MAXIMUM ABOVE THE FINISH FLOOR OR GROUND AND IS 3 1/2 INCHES (90 MM) MAXIMUM FROM THE FRONT EDGE OF THE UNIT, INCLUDING BUMPERS.

4. OPERABLE PARTS SHALL COMPLY WITH SECTION 11B-309. THE FLOW OF WATER SHALL BE ACTIVATED BY A MANUALLY OPERATED SYSTEM THAT IS FRONT MOUNTED OR SIDE MOUNTED AND LOCATED WITHIN 6 INCHES (152 MM) OF THE FRONT EDGE OF THE FOUNTAIN OR AN AUTOMATIC ELECTRONICALLY CONTROLLED DEVICE. (11B-602.3)

5. SPOUT OUTLETS SHALL BE 36 INCHES (915 MM) MAXIMUM ABOVE THE FINISH FLOOR OR GROUND. (11B-602.4) THE SPOUT SHALL BE LOCATED 15 INCHES (380 MM) MINIMUM FROM THE VERTICAL SUPPORT AND 5 INCHES (125 MM) MAXIMUM FROM THE FRONT EDGE OF THE UNIT, INCLUDING BUMPERS. (11B-602.5)

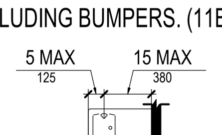

FIGURE 11B-602.5 - DRINKING FOUNTAIN SPOUT LOCATION

6. SPOUT OUTLETS OF DRINKING FOUNTAINS FOR STANDING PERSONS SHALL BE 38 INCHES MIN AND 43 INCHES MAX ABOVE THE FINISH FLOOR OR GROUND. (11B-602.7)

7. ALL DRINKING FOUNTAINS SHALL EITHER BE LOCATED COMPLETELY WITHIN ALCOVES, POSITIONED COMPLETELY BETWEEN WING WALLS, OR OTHERWISE POSITIONED SO AS NOT TO ENCROACH INTO PEDESTRIAN WAYS. THE PROTECTED AREA WITHIN WHICH A DRINKING FOUNTAIN IS LOCATED SHALL BE 32 INCHES WIDE MINIMUM AND 18 INCHES DEEP MINIMUM, AND SHALL COMPLY WITH SECTION 11B-305.7. WHEN USED, WING WALLS OR BARRIERS SHALL PROJECT HORIZONTALLY AT LEAST AS FAR AS THE DRINKING FOUNTAIN AND TO WITHIN 6 INCHES VERTICALLY FROM THE FLOOR OR GROUND SURFACE. (11B-602.9)

P. TOILET AND BATHING ROOMS

1. TURNING SPACE COMPLYING WITH SECTION 11B-304 SHALL BE PROVIDED WITHIN THE ROOM. (11B-603.2.1)

2. REQUIRED CLEAR FLOOR SPACES, CLEARANCE AT FIXTURES, AND TURNING SPACE SHALL BE PERMITTED TO OVERLAP. (11B-603.2.2)

3. DOORS SHALL NOT SWING INTO THE CLEAR FLOOR SPACE OR CLEARANCE REQUIRED OR ANY FIXTURE. DOORS TO ACCESSIBLE WATER CLOSET COMPARTMENTS SHALL BE PERMITTED TO ENCROACH INTO THE TURNING SPACE WITHOUT LIMITATION. OTHER THAN DOORS TO ACCESSIBLE WATER CLOSET COMPARTMENTS, A DOOR, IN ANY POSITION, SHALL BE PERMITTED TO ENCROACH INTO THE TURNING SPACE BY 12 INCHES (305 MM) MAXIMUM. (11B-603.2.3)

4. MIRRORS LOCATED ABOVE LAVATORIES OR COUNTERTOPS SHALL BE INSTALLED WITH THE BOTTOM EDGE OF THE REFLECTING SURFACE 40 INCHES MAXIMUM ABOVE THE FINISH FLOOR OR GROUND. MIRRORS NOT LOCATED ABOVE LAVATORIES OR COUNTERTOPS SHALL BE INSTALLED WITH THE BOTTOM EDGE OF THE REFLECTING SURFACE 35 INCHES MAXIMUM ABOVE THE FINISH FLOOR OR GROUND. (11B-603.3)

5. COAT HOOKS SHALL BE LOCATED WITHIN ONE OF THE REACH RANGES SPECIFIED IN SECTION 11B-308. SHELVES SHALL BE LOCATED 40 INCHES (1015 MM) MINIMUM AND 48 INCHES (1220 MM) MAXIMUM ABOVE THE FINISH FLOOR. MEDICINE CABINETS SHALL BE LOCATED WITH A USABLE SHELF NO HIGHER THAN 44 INCHES (1118 MM) MAXIMUM ABOVE THE FINISH FLOOR. (11B-603.4)

6. WHERE TOWEL OR SANITARY NAPKIN DISPENSERS, WASTE RECEPTACLES, OR OTHER ACCESSORIES ARE PROVIDED IN TOILET FACILITIES, AT LEAST ONE OF EACH TYPE SHALL BE LOCATED ON AN ACCESSIBLE ROUTE. ALL OPERABLE PARTS, INCLUDING COIN SLOTS, SHALL BE 40 INCHES MAXIMUM ABOVE THE FINISH FLOOR. (11B-603.5)

7. THE WATER CLOSET SHALL BE POSITIONED WITH A WALL OR PARTITION TO THE REAR AND TO ONE SIDE. THE CENTERLINE OF THE WATER CLOSET SHALL BE 17 INCHES (430 MM) MINIMUM TO 18 INCHES (455 MM) MAXIMUM FROM THE SIDE WALL OR PARTITION, EXCEPT THAT THE WATER CLOSET SHALL BE 17 INCHES (430 MM) MINIMUM AND 19 INCHES (485 MM) MAXIMUM FROM THE SIDE WALL OR PARTITION IN THE AMBULATORY ACCESSIBLE TOILET COMPARTMENT SPECIFIED IN SECTION 11B-604.8.2. WATER CLOSETS SHALL BE ARRANGED FOR A LEFT-HAND OR RIGHT-HAND APPROACH. (11B-604.2)

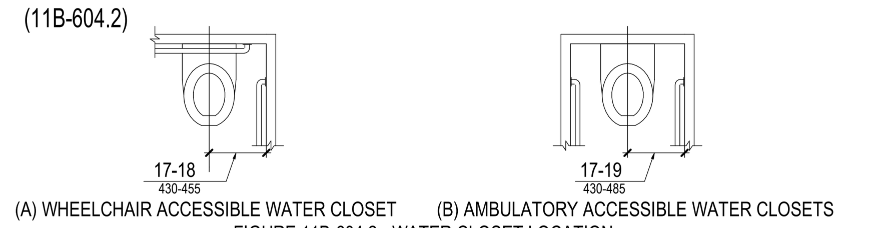

FIGURE 11B-604.2 - WATER CLOSET LOCATION

8. CLEARANCE AROUND A WATER CLOSET SHALL BE 60 INCHES (1525 MM) MINIMUM MEASURED PERPENDICULAR FROM THE SIDE WALL AND 56 INCHES (1420 MM) MINIMUM MEASURED PERPENDICULAR FROM THE REAR WALL. A MINIMUM 60 INCHES (1524 MM) WIDE AND 48 INCHES (1219 MM) DEEP MANEUVERING SPACE SHALL BE PROVIDED IN FRONT OF THE WATER CLOSET. (11B-604.3.1)

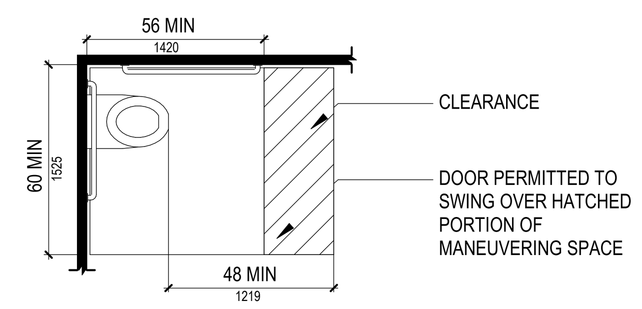

FIGURE 11B-604.3.1 - SIZE OF CLEARANCE AT WATER CLOSETS

9. THE REQUIRED CLEARANCE AROUND THE WATER CLOSET SHALL BE PERMITTED TO OVERLAP THE WATER CLOSET, ASSOCIATED GRAB BARS, DISPENSERS, SANITARY NAPKIN DISPOSAL UNITS, COAT HOOKS, SHELVES, ACCESSIBLE ROUTES, CLEAR FLOOR SPACE AND CLEARANCES REQUIRED AT OTHER FIXTURES, AND THE TURNING SPACE. NO OTHER FIXTURES OR OBSTRUCTIONS SHALL BE LOCATED WITHIN THE REQUIRED WATER CLOSET CLEARANCE. (11B-604.3.2)

10. THE SEAT HEIGHT OF A WATER CLOSET ABOVE THE FINISH FLOOR SHALL BE 17 INCHES (430 MM) MINIMUM AND 19 INCHES (485 MM) MAXIMUM MEASURED TO THE TOP OF THE SEAT. SEATS SHALL NOT BE SPRUNG TO RETURN TO A LIFTED POSITION. SEATS SHALL BE 2 INCHES (51 MM) HIGH MAXIMUM. (11B-604.4)

11. GRAB BARS FOR WATER CLOSETS SHALL COMPLY WITH SECTION 11B-609. GRAB BARS SHALL BE PROVIDED ON THE SIDE WALL CLOSEST TO THE WATER CLOSET AND ON THE REAR WALL. WHERE SEPARATE GRAB BARS ARE REQUIRED ON ADJACENT WALLS AT A COMMON MOUNTING HEIGHT, AN L-SHAPED GRAB BAR MEETING THE DIMENSIONAL REQUIREMENTS OF SECTIONS 11B-604.5.1 AND 11B-604.5.2 SHALL BE PERMITTED. (11B-604.5)

12. THE SIDE WALL GRAB BAR SHALL BE 42 INCHES (1065 MM) LONG MINIMUM, LOCATED 12 INCHES (305 MM) MAXIMUM FROM THE REAR WALL AND EXTENDING 54 INCHES (1370 MM) MINIMUM FROM THE REAR WALL WITH THE FRONT END POSITIONED 24 INCHES (610 MM) MINIMUM IN FRONT OF THE WATER CLOSET. (11B-604.5.1)

13. THE REAR WALL GRAB BAR SHALL BE 36 INCHES (915 MM) LONG MINIMUM AND EXTEND FROM THE CENTERLINE OF THE WATER CLOSET 12 INCHES (305 MM) MINIMUM ON ONE SIDE AND 24 INCHES (610 MM) MINIMUM ON THE OTHER SIDE. (11B-604.5.2)

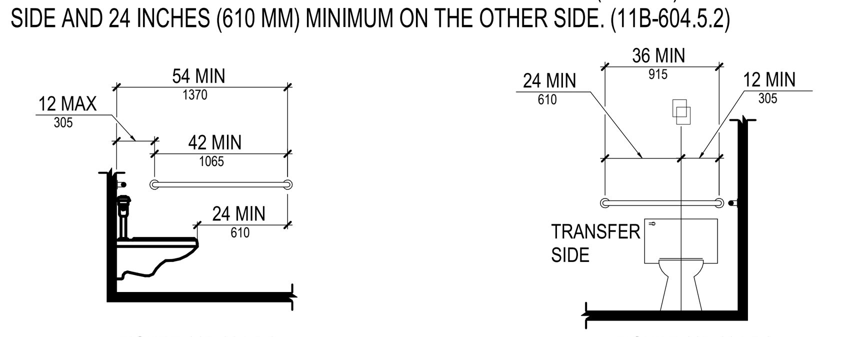

FIGURE 11B-604.5.1 SIDE WALL GRAB BAR AT WATER CLOSETS

FIGURE 11B-604.5.2 REAR WALL GRAB BAR AT WATER CLOSETS

14. FLUSH CONTROLS SHALL BE HAND OPERATED OR AUTOMATIC. HAND OPERATED FLUSH CONTROLS SHALL COMPLY WITH SECTION 11B-309 EXCEPT THEY SHALL BE LOCATED 44 INCHES (1118 MM) MAXIMUM ABOVE THE FLOOR. FLUSH CONTROLS SHALL BE LOCATED ON THE OPEN SIDE OF THE WATER CLOSET EXCEPT IN AMBULATORY ACCESSIBLE COMPARTMENTS COMPLYING WITH SECTION 11B-604.8.2. (11B-604.6)

15. TOILET PAPER DISPENSERS SHALL COMPLY WITH SECTION 11B-309.4 AND SHALL BE 7 INCHES MINIMUM AND 9 INCHES MAXIMUM IN FRONT OF THE WATER CLOSET MEASURED TO THE CENTERLINE OF THE DISPENSER. THE OUTLET OF THE DISPENSER SHALL BE BELOW THE GRAB BAR,19 INCHES MIN ABOVE THE FINISH FLOOR AND SHALL NOT BE LOCATED BEHIND GRAB BARS. DISPENSERS SHALL NOT BE OF A TYPE THAT CONTROLS DELIVERY OR THAT DOES NOT ALLOW CONTINUOUS PAPER FLOW. (11B-604.71)

16. WHEELCHAIR ACCESSIBLE COMPARTMENTS SHALL BE 60 INCHES WIDE MINIMUM MEASURED PERPENDICULAR TO THE SIDE WALL, AND 56 INCHES DEEP MINIMUM FOR WALL HUNG WATER CLOSETS AND 59 INCHES DEEP MINIMUM FOR FLOOR MOUNTED WATER CLOSETS MEASURED PERPENDICULAR TO THE REAR WALL. WHEELCHAIR ACCESSIBLE COMPARTMENTS SHALL ADDITIONALLY PROVIDE MANEUVERING SPACE COMPLYING WITH SECTION 11B-604.8.1.1.1, 11B-604.8.1.1.2, OR 11B-604.8.1.1.3, AS APPLICABLE. WHEELCHAIR ACCESSIBLE COMPARTMENTS FOR CHILDREN'S USE SHALL BE 60 INCHES WIDE MINIMUM MEASURED PERPENDICULAR TO THE SIDE WALL, AND 59 INCHES DEEP MINIMUM FOR WALL HUNG AND FLOOR MOUNTED WATER CLOSETS MEASURED PERPENDICULAR TO THE REAR WALL. (11B-604.8.1.1)

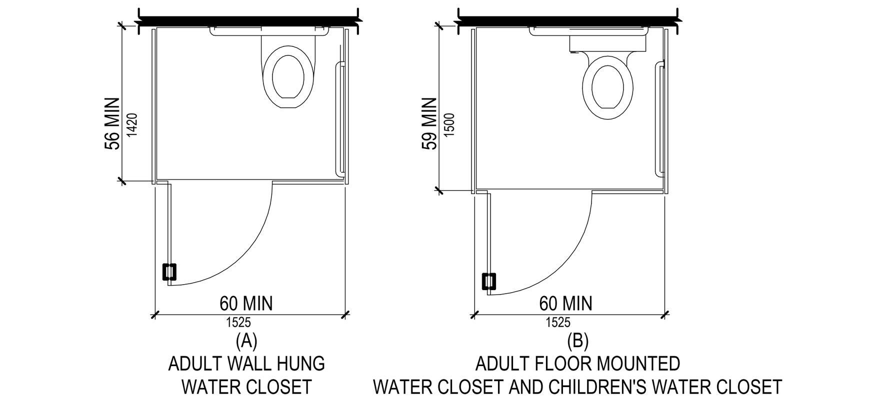

FIGURE 11B-604.8.1.1 - SIZE OF WHEELCHAIR ACCESSIBLE TOILET COMPARTMENT

17. TOILET COMPARTMENT DOORS, INCLUDING DOOR HARDWARE, SHALL COMPLY WITH SECTION 11B-404 EXCEPT THAT IF THE APPROACH IS FROM THE PUSH SIDE OF THE COMPARTMENT DOOR, CLEARANCE BETWEEN THE DOOR SIDE OF THE COMPARTMENT AND ANY OBSTRUCTION SHALL BE 48 INCHES MINIMUM MEASURED PERPENDICULAR TO THE COMPARTMENT DOOR IN ITS CLOSED POSITION. DOORS SHALL BE LOCATED IN THE FRONT PARTITION OR IN THE SIDE WALL OR PARTITION FARTHEST FROM THE WATER CLOSET. WHERE LOCATED IN THE FRONT PARTITION, THE DOOR OPENING SHALL BE 4 INCHES MAXIMUM FROM THE SIDE WALL OR PARTITION FARTHEST FROM THE WATER CLOSET. WHERE LOCATED IN THE SIDE WALL OR PARTITION, THE DOOR OPENING SHALL BE 4 INCHES MAXIMUM FROM THE FRONT PARTITION. THE DOOR SHALL BE SELF-CLOSING. A DOOR PULL COMPLYING WITH SECTION 11B-404.2.7 SHALL BE PLACED ON BOTH SIDES OF THE DOOR NEAR THE LATCH. DOORS SHALL NOT SWING INTO THE CLEAR FLOOR SPACE OR CLEARANCE REQUIRED FOR ANY FIXTURE. DOORS MAY SWING INTO THAT PORTION OF MANEUVERING SPACE WHICH DOES NOT OVERLAP THE CLEARANCE REQUIRED AT A WATER CLOSET. (11B-604.8.1.2) EXCEPTION: WHEN LOCATED AT THE SIDE OF A TOILET COMPARTMENT, THE TOILET COMPARTMENT DOOR OPENING SHALL PROVIDE A CLEAR WIDTH OF 34 INCHES MINIMUM.

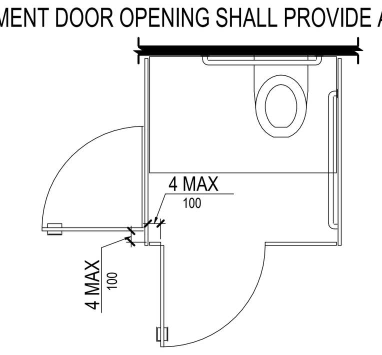

FIGURE 11B-604.8.1.2 - WHEELCHAIR ACCESSIBLE TOILET COMPARTMENT DOORS

18. AT LEAST ONE SIDE PARTITION SHALL PROVIDE A TOE CLEARANCE OF 9 INCHES (230 MM) MINIMUM ABOVE THE FINISH FLOOR AND 6 INCHES (150 MM) DEEP MINIMUM BEYOND THE COMPARTMENT-SIDE FACE OF THE PARTITION, EXCLUSIVE OF PARTITION SUPPORT MEMBERS. PARTITION COMPONENTS AT TOE CLEARANCES SHALL BE SMOOTH WITHOUT SHARP EDGES OR ABRASIVE SURFACES. COMPARTMENTS FOR CHILDREN'S USE SHALL PROVIDE A TOE CLEARANCE OF 12 INCHES (305 MM) MINIMUM ABOVE THE FINISH FLOOR. (11B-604.8.1.4) EXCEPTION: TOE CLEARANCE AT THE SIDE PARTITION IS NOT REQUIRED IN A COMPARTMENT GREATER THAN 66 INCHES (1675 MM) WIDE.

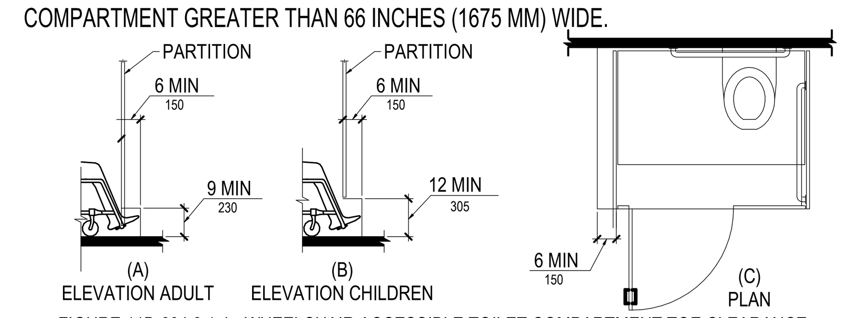

FIGURE 11B-604.8.1.4 - WHEELCHAIR ACCESSIBLE TOILET COMPARTMENT TOE CLEARANCE

19. AMBULATORY ACCESSIBLE COMPARTMENTS SHALL HAVE A DEPTH OF 60 INCHES (1525 MM) MINIMUM AND A WIDTH OF 35 INCHES (890 MM) MINIMUM AND 37 INCHES (940 MM) MAXIMUM. (11B-604.8.2.1)

20. AMBULATORY TOILET COMPARTMENT DOORS, INCLUDING DOOR HARDWARE, SHALL COMPLY WITH SECTION 11B-404, EXCEPT THAT IF THE APPROACH IS TO THE LATCH SIDE OF THE COMPARTMENT DOOR, CLEARANCE BETWEEN THE DOOR SIDE OF THE COMPARTMENT AND ANY OBSTRUCTION SHALL BE 44 INCHES (1118 MM) MINIMUM. THE DOOR SHALL BE SELF-CLOSING. A DOOR PULL COMPLYING WITH SECTION 11B-404.2.7 SHALL BE PLACED ON BOTH SIDES OF THE DOOR NEAR THE LATCH. TOILET COMPARTMENT DOORS SHALL NOT SWING INTO THE MINIMUM REQUIRED COMPARTMENT AREA. (11B-604.8.2.2)

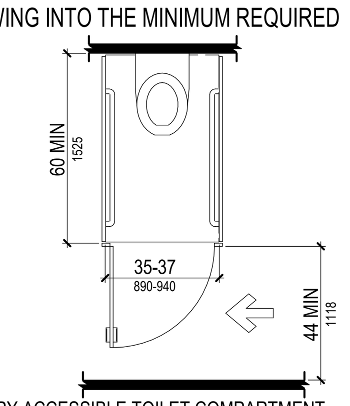

FIGURE 11B-604.8.2 - AMBULATORY ACCESSIBLE TOILET COMPARTMENT

21. URINALS SHALL BE THE STALL-TYPE OR THE WALL-HUNG TYPE WITH THE RIM 17 INCHES (430 MM) MAXIMUM ABOVE THE FINISH FLOOR OR GROUND. URINALS SHALL BE 13 1/2 INCHES (345 MM) DEEP MINIMUM MEASURED FROM THE OUTER FACE OF THE URINAL RIM TO THE BACK OF THE FIXTURE. (11B-605.2)

22. A CLEAR FLOOR OR GROUND SPACE COMPLYING WITH SECTION 11B-305 POSITIONED FOR FORWARD APPROACH SHALL BE PROVIDED. (11B-605.3)

23. FLUSH CONTROLS SHALL BE HAND OPERATED OR AUTOMATIC. HAND OPERATED FLUSH CONTROLS SHALL COMPLY WITH SECTION 11B-309 EXCEPT THAT THE FLUSH CONTROL SHALL BE MOUNTED AT A MAX HEIGHT OF 44 IN ABOVE THE FINISH FLOOR. (11B-605.4)

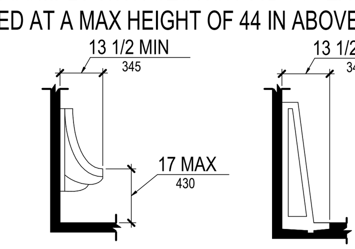

FIGURE 11B-605.2 - HEIGHT AND DEPTH OF URINALS

24. LAVATORIES AND SINKS SHALL BE INSTALLED WITH THE FRONT OF THE HIGHER OF THE RIM OR COUNTER SURFACE 34 INCHES (865 MM) MAXIMUM ABOVE THE FINISH FLOOR OR GROUND. (11B-606.3) A CLEAR FLOOR SPACE COMPLYING WITH SECTION 11B-305, POSITIONED FOR A FORWARD APPROACH, AND KNEE AND TOE CLEARANCE COMPLYING WITH SECTION 11B-306 SHALL BE PROVIDED. (11B-606.2)

25. CONTROLS FOR FAUCETS SHALL COMPLY WITH SECTION 11B-309. HAND-OPERATED METERING FAUCETS SHALL REMAIN OPEN FOR 10 SECONDS MINIMUM. (11B-606.4)

26. WATER SUPPLY AND DRAIN PIPES UNDER LAVATORIES AND SINKS SHALL BE INSULATED OR OTHERWISE CONFIGURED TO PROTECT AGAINST CONTACT. THERE SHALL BE NO SHARP OR ABRASIVE SURFACES UNDER LAVATORIES AND SINKS. (11B-606.5)

27. CLEARANCE IN FRONT OF BATHTUBS SHALL EXTEND THE LENGTH OF THE BATHTUB AND SHALL BE 48 INCHES (1220 MM) WIDE MINIMUM FOR FORWARD APPROACH AND 30 INCHES (760 MM) WIDE MINIMUM FOR PARALLEL APPROACH. A LAVATORY COMPLYING WITH SECTION 11B-606 SHALL BE PERMITTED AT THE CONTROL END OF THE CLEARANCE. WHERE A PERMANENT SEAT IS PROVIDED AT THE HEAD END OF THE BATHTUB, THE CLEARANCE SHALL EXTEND 12 INCHES (305 MM) MINIMUM BEYOND THE WALL AT THE HEAD END OF THE BATHTUB. (11B-607.2)

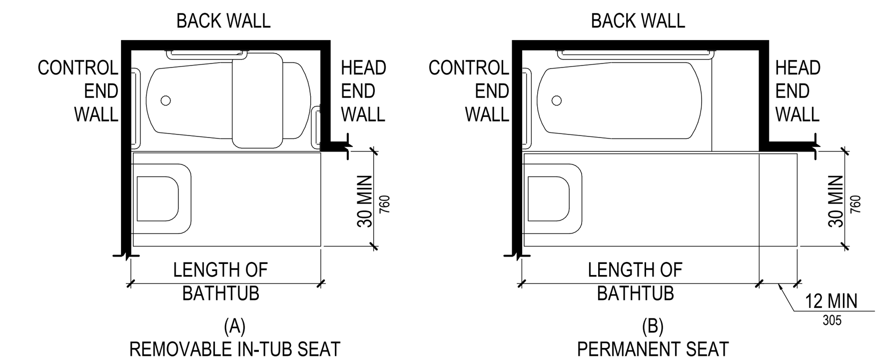

FIGURE 11B-607.2 - CLEARANCE FOR BATHTUBS

28. A PERMANENT SEAT AT THE HEAD END OF THE BATHTUB OR A REMOVABLE IN-TUB SEAT SHALL BE PROVIDED. SEATS SHALL COMPLY WITH SECTION 11B-610. (11B-607.3)

29. GRAB BARS FOR BATHTUBS SHALL COMPLY WITH SECTION 11B-609 AND SHALL BE PROVIDED IN ACCORDANCE WITH 11B-607.4.1 OR 11B-607.4.2. WHERE SEPARATE GRAB BARS ARE REQUIRED ON ADJACENT WALLS AT A COMMON MOUNTING HEIGHT, AN L-SHAPED OR U-SHAPED GRAB BAR MEETING THE DIMENSIONAL REQUIREMENTS OF SECTION 11B-607.4.1 OR 11B-607.4.2 SHALL BE PERMITTED. (11B-607.4)

30. FOR BATHTUBS WITH PERMANENT SEATS, TWO GRAB BARS SHALL BE INSTALLED ON THE BACK WALL, ONE LOCATED IN ACCORDANCE WITH SECTION 11B-609.4 AND THE OTHER LOCATED 8 INCHES (205 MM) MINIMUM AND 10 INCHES (255 MM) MAXIMUM ABOVE THE RIM OF THE BATHTUB. EACH GRAB BAR SHALL BE INSTALLED 15 INCHES (380 MM) MAXIMUM FROM THE HEAD END WALL AND 12 INCHES (305 MM) MAXIMUM FROM THE CONTROL END WALL. (11B-607.4.1.1) A GRAB BAR 24 INCHES (610 MM) LONG MINIMUM SHALL BE INSTALLED ON THE CONTROL END WALL AT THE FRONT EDGE OF THE BATHTUB. (11B-607.4.1.2)

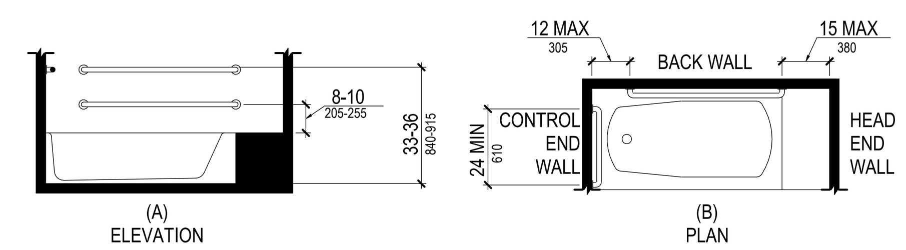

FIGURE 11B-607.4.1 - GRAB BARS FOR BATHTUBS WITH PERMANENT SEATS

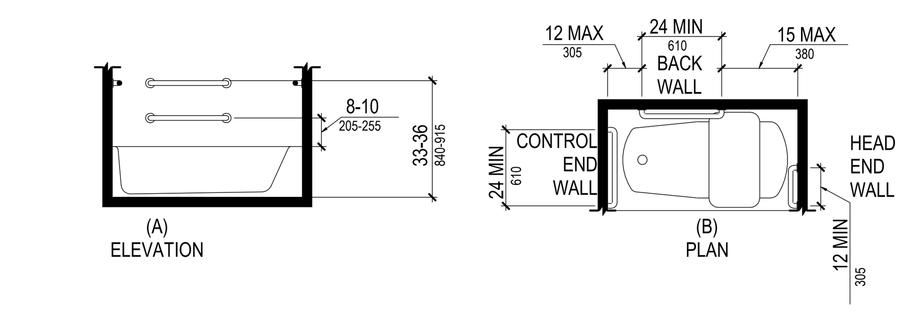

FIGURE 11B-607.4.2 - GRAB BARS FOR BATHTUBS WITH REMOVABLE IN-TUB SEATS

31. FOR BATHTUBS WITHOUT PERMANENT SEATS, TWO GRAB BARS SHALL BE INSTALLED ON THE BACK WALL, ONE LOCATED IN ACCORDANCE WITH SECTION 11B-609.4 AND OTHER LOCATED 8 INCHES (205 MM) MINIMUM AND 10 INCHES (255 MM) MAXIMUM ABOVE THE RIM OF THE BATHTUB. EACH GRAB BAR SHALL BE 24 INCHES (610 MM) LONG MINIMUM AND SHALL BE INSTALLED 24 INCHES (610 MM) MAXIMUM FROM THE HEAD END WALL AND 12 INCHES (305 MM) MAXIMUM FROM THE CONTROL END WALL. (11B-607.4.2.1) A GRAB BAR 24 INCHES (610 MM) LONG MINIMUM SHALL BE INSTALLED ON THE CONTROL END WALL AT THE FRONT EDGE OF THE BATHTUB. (11B-607.4.2.2) A GRAB BAR 12 INCHES (305 MM) LONG MINIMUM SHALL BE INSTALLED ON THE HEAD END WALL AT THE FRONT EDGE OF THE BATHTUB. (11B-607.4.2.3)

32. CONTROLS, OTHER THAN DRAIN STOPPERS, SHALL BE LOCATED ON AN END WALL. CONTROLS SHALL BE BETWEEN THE BATHTUB RIM AND GRAB BAR, AND BETWEEN THE OPEN SIDE OF THE BATHTUB AND THE CENTERLINE OF THE WIDTH OF THE BATHTUB. CONTROLS SHALL COMPLY WITH SECTION 11B-309.4. (11B-607.5)

33. A SHOWER SPRAY UNIT WITH A HOSE 59 INCHES (1500 MM) LONG MINIMUM THAT CAN BE USED BOTH AS A FIXED-POSITION SHOWER HEAD AND AS A HAND-HELD SHOWER SHALL BE PROVIDED. THE SHOWER SPRAY UNIT SHALL HAVE AN ON/OFF CONTROL WITH A NON-POSITIVE SHUT-OFF. IF AN ADJUSTABLE-HEIGHT SHOWER HEAD ON A VERTICAL BAR IS USED, THE BAR SHALL BE INSTALLED SO AS NOT TO OBSTRUCT THE USE OF GRAB BARS. BATHTUB SHOWER SPRAY UNITS SHALL DELIVER WATER THAT IS 120°F (49°C) MAXIMUM. (11B-607.6)

34. ENCLOSURES FOR BATHTUBS SHALL NOT OBSTRUCT CONTROLS, FAUCETS, SHOWER AND SPRAY UNITS OR OBSTRUCT TRANSFER FROM WHEELCHAIRS ONTO BATHTUB SEATS OR INTO BATHTUBS. ENCLOSURES ON BATHTUBS SHALL NOT HAVE TRACKS INSTALLED ON THE RIM OF THE OPEN FACE OF THE BATHTUB. (11B-607.7)

35. TRANSFER TYPE SHOWER COMPARTMENTS SHALL BE 36 INCHES (915 MM) BY 36 INCHES (915 MM) CLEAR INSIDE DIMENSIONS MEASURED AT THE CENTER POINTS OF OPPOSING SIDES AND SHALL HAVE A 36 INCH (915 MM) WIDE MINIMUM ENTRY ON THE FACE OF THE SHOWER COMPARTMENT. CLEARANCE OF 36 INCHES (915 MM) WIDE MINIMUM BY 48 INCHES (1220 MM) LONG MINIMUM MEASURED FROM THE CONTROL WALL SHALL BE PROVIDED. TRANSFER TYPE SHOWER COMPARTMENTS SHALL BE PERMITTED IN TRANSIENT LODGING GUEST ROOMS, MULTIBEDROOM HOUSING UNITS IN UNDERGRADUATE STUDENT HOUSING AND RESIDENTIAL DWELLING UNITS; AND SHALL NOT BE PERMITTED AT OTHER LOCATIONS TO MEET THE REQQUIREMENTS OF SECTION 11B-213.3.6. (11B-608.2.1)

36. STANDARD ROLL-IN TYPE SHOWER COMPARTMENTS SHALL BE 30 INCHES (760 MM) WIDE MINIMUM BY 60 INCHES (1525 MM) DEEP MINIMUM CLEAR INSIDE DIMENSIONS MEASURED AT CENTER POINTS OF OPPOSING SIDES WITH A FULL OPENING WIDTH ON THE LONG SIDE. (11B-608.2.2) A 36 INCH (915 MM) WIDE MINIMUM BY 60 INCH (1525 MM) LONG MINIMUM CLEARANCE SHALL BE PROVIDED ADJACENT TO THE OPEN FACE OF THE SHOWER COMPARTMENT. (11B-608.2.2.1)

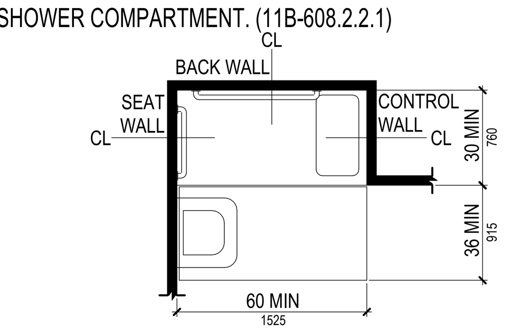

NOTE: INSIDE FINISHED DIMENSIONS MEASURED AT THE CENTER POINTS OF OPPOSING SIDES

FIGURE 11B-608.2.2 - STANDARD ROLL-IN TYPE SHOWER COMPARTMENT SIZE AND CLEARANCE

37. ALTERNATE ROLL-IN TYPE SHOWER COMPARTMENTS SHALL BE 36 INCHES WIDE AND 60 INCHES DEEP MINIMUM CLEAR INSIDE DIMENSIONS MEASURED AT CENTER POINTS OF OPPOSING SIDES. A 36 INCH (915 MM) WIDE MINIMUM ENTRY SHALL BE PROVIDED AT ONE END OF THE LONG SIDE OF THE COMPARTMENT. (11B-608.2.3)

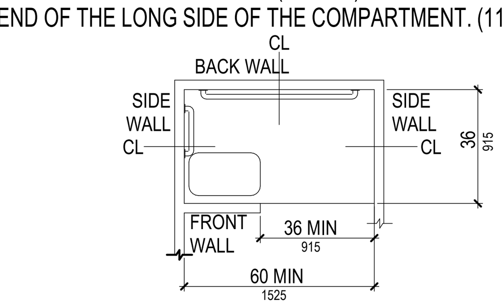

NOTE: INSIDE FINISHED DIMENSIONS MEASURED AT THE CENTER POINTS OF OPPOSING SIDES

FIGURE 11B-608.2.3 - ALTERNATE ROLL-IN TYPE SHOWER COMPARTMENT SIZE AND CLEARANCE

38. IN TRANSFER TYPE COMPARTMENTS, GRAB BARS SHALL BE PROVIDED ACROSS THE CONTROL WALL AND BACK WALL TO A POINT 18 INCHES (455 MM) FROM THE CONTROL WALL. (1B-608.3.1)

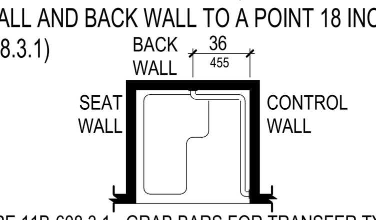

FIGURE 11B-608.3.1 - GRAB BARS FOR TRANSFER TYPE SHOWERS

39. GRAB BARS SHALL BE PROVIDED ON THE BACK WALL AND THE SIDE WALL OPPOSITE THE SEAT. GRAB BARS SHALL NOT BE PROVIDED ABOVE THE SEAT. GRAB BARS SHALL BE INSTALLED 6 INCHES (150 MM) MAXIMUM FROM ADJACENT WALLS. (11B-608.3.2)

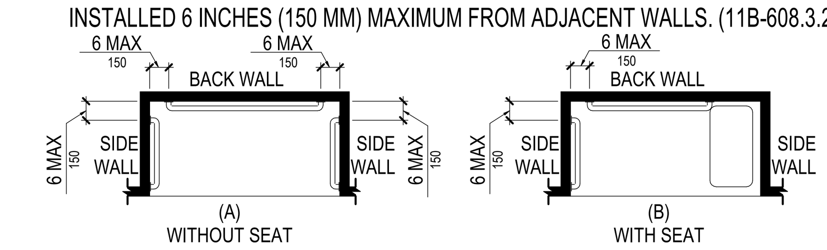

FIGURE 11B-608.3.2 - GRAB BARS FOR STANDARD ROLL-IN TYPE SHOWERS

40. IN ALTERNATE ROLL-IN TYPE SHOWER COMPARTMENTS, GRAB BARS SHALL BE PROVIDED ON THE BACK WALL AND THE SIDE WALL FARTHEST FROM THE COMPARTMENT ENTRY. GRAB BARS SHALL NOT BE PROVIDED ABOVE THE SEAT. GRAB BARS SHALL BE INSTALLED 6 INCHES MAXIMUM FROM ADJACENT WALLS. (11B-608.3.3)

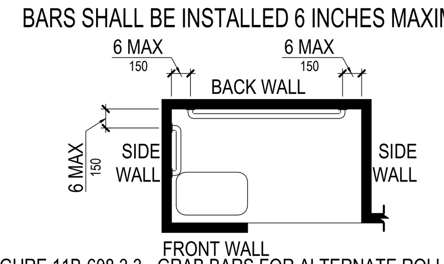

FIGURE 11B-608.3.3 - GRAB BARS FOR ALTERNATE ROLL-IN TYPE SHOWERS

41. CONTROLS, FAUCETS, AND SHOWER SPRAY UNITS SHALL COMPLY WITH 11B-309.4. CONTROLS AND FAUCETS SHALL ALLOW THE USER TO CLOSE AND OPEN THE WATER SUPPLY. (11B-608.5)

42. IN TRANSFER TYPE SHOWER COMPARTMENTS, THE CONTROLS, FAUCETS, AND SHOWER SPRAY UNIT SHALL BE INSTALLED ON THE SIDE WALL OPPOSITE THE SEAT 38 INCHES (965 MM) MINIMUM AND 48 INCHES (1220 MM) MAXIMUM ABOVE THE SHOWER FLOOR AND SHALL BE LOCATED ON THE CONTROL WALL 15 INCHES (380 MM) MAXIMUM FROM THE CENTERLINE OF THE SEAT TOWARD THE SHOWER OPENING. (11B-608.5.1)

43. IN STANDARD ROLL-IN TYPE SHOWER COMPARTMENTS, THE CONTROLS AND FAUCETS SHALL BE INSTALLED ON THE BACK WALL OF THE COMPARTMENT ADJACENT TO THE SEAT WALL 19 INCHES (483 MM) MINIMUM AND 27 INCHES (685 MM) MAXIMUM FROM THE SEAT WALL; AND SHALL BE LOCATED ABOVE THE GRAB BAR, BUT NO HIGHER THAN 48 INCHES (1220 MM) ABOVE THE SHOWER FLOOR, WITH THEIR CENTERLINE AT 39 INCHES (991 MM) TO 41 INCHES (1041 MM) ABOVE THE SHOWER FLOOR. (11B-608.5.2)

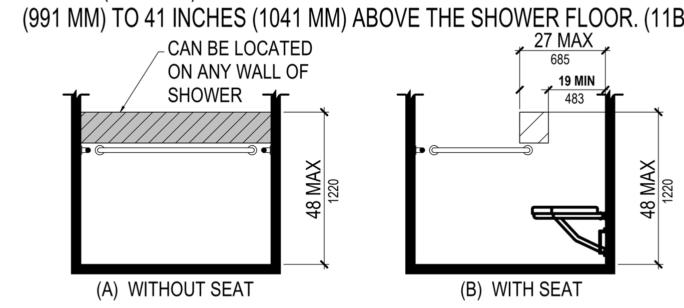

FIGURE 11B-608.5.2 - STANDARD ROLL-IN TYPE SHOWER COMPARTMENT CONTROL LOCATION

44. IN ALTERNATE ROLL-IN TYPE SHOWER BAR, OPERABLE PARTS OF CONTROLS AND FAUCETS SHALL BE INSTALLED ON THE SIDE WALL OF THE COMPARTMENT ADJACENT TO THE SEAT WALL 19 INCHES (483 MM) MINIMUM AND 27 INCHES (685 MM) MAXIMUM FROM THE SEAT WALL; AND SHALL BE LOCATED ABOVE THE GRAB BAR, BUT NO HIGHER THAN 48 INCHES (1220 MM) ABOVE THE SHOWER FLOOR, WITH THEIR CENTERLINE AT 39 INCHES (991 MM) TO 41 INCHES (1041 MM) ABOVE THE SHOWER FLOOR. (11B-608.5.3)

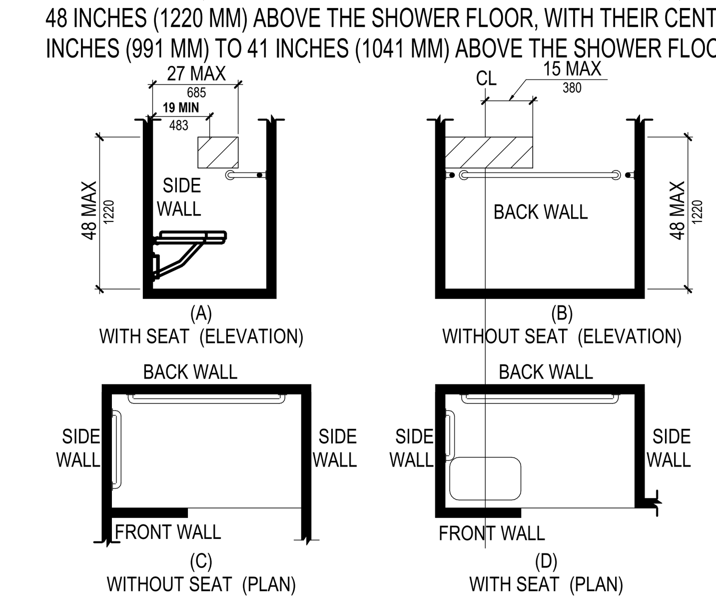

FIGURE 11B-608.5.3 - ALTERNATE ROLL-IN TYPE SHOWER COMPARTMENT CONTROL LOCATION

NOAA group architects

4990 N Harbor Drive, Ste 201
San Diego, CA 92106

tel: 619-297-8066
web: www.noaainc.com

LICENSED ARCHITECT DANUBE TALATAY No. C38046 REN 11/30/2023 STATE OF CALIFORNIA

DO NOT SCALE DRAWINGS. ANY DISCREPANCIES TO BE REVIEWED WITH THE ARCHITECT.

SAN DIEGO FAMILY DERMATOLOGY

222 W. MADISON AVENUE
EL CAJON, CA 92020

REVISION SCHEDULE

Nº	DATE	ISSUE
1	07/06/2023	1ST CITY REVIEW
2	08/22/2023	2ND CITY REVIEW

Project No:	BP-2023-0267
Project Start Date:	Issue Date
Drawn:	Designer
Checked:	Checker
Revision:	
Sheet Name:	

ADA NOTES

Scale: 1/8" = 1'-0"

Sheet No:

A-015

8/25/2023 10:51:14 AM

45. A SHOWER SPRAY UNIT WITH A HOSE 59 INCHES (1500 MM) LONG MINIMUM THAT CAN BE USED BOTH AS A FIXED-POSITION SHOWER HEAD AND AS A HAND-HELD SHOWER SHALL BE PROVIDED. THE SHOWER SPRAY UNIT SHALL HAVE AN ON/OFF CONTROL WITH A NON-POSITIVE SHUT-OFF. IF AN ADJUSTABLE-HEIGHT SHOWER HEAD ON A VERTICAL BAR IS USED, THE BAR SHALL BE INSTALLED SO AS NOT TO OBSTRUCT THE USE OF GRAB BARS. SHOWER SPRAY UNITS SHALL DELIVER WATER THAT IS 120°F (49°C) MAXIMUM. (11B-608.6)

46. THRESHOLDS IN ROLL-IN TYPE SHOWER COMPARTMENTS SHALL BE 1/2 INCH (13 MM) HIGH MAXIMUM IN ACCORDANCE WITH SECTION 11B-303. IN TRANSFER TYPE SHOWER COMPARTMENTS, THRESHOLDS 1/2 INCH HIGH MAX SHALL BE BEVELED, ROUNDED, OR VERTICAL. (11B-608.7)

47. ENCLOSURES FOR SHOWER COMPARTMENTS SHALL NOT OBSTRUCT CONTROLS, FAUCETS, AND SHOWER SPRAY UNITS OR OBSTRUCT TRANSFER FROM WHEELCHAIRS ONTO SHOWER SEATS. (11B-608.8)

48. GRAB BARS WITH CIRCULAR CROSS SECTIONS SHALL HAVE AN OUTSIDE DIAMETER OF 1 1/4 INCHES (32 MM) MINIMUM AND 2 INCHES (51 MM) MAXIMUM. (11B-609.2.1) GRAB BARS WITH NON-CIRCULAR CROSS SECTIONS SHALL HAVE A CROSS-SECTION DIMENSION OF 2 INCHES (51 MM) MAXIMUM AND A PERIMETER DIMENSION OF 4 INCHES (100 MM) MINIMUM AND 4.8 INCHES (120 MM) MAXIMUM. (11B-609.2.2)

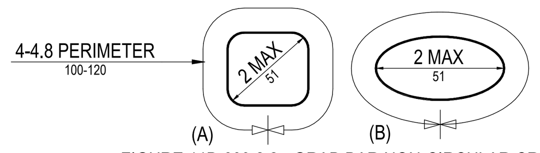

FIGURE 11B-609.2.2 - GRAB BAR NON-CIRCULAR CROSS SECTION

49. THE SPACE BETWEEN THE WALL AND THE GRAB BAR SHALL BE 1 1/2 INCHES (38 MM). THE SPACE BETWEEN THE GRAB BAR AND PROJECTING OBJECTS BELOW AND AT THE ENDS SHALL BE 1 1/2 INCHES (38 MM) MINIMUM. THE SPACE BETWEEN THE GRAB BAR AND PROJECTING OBJECTS ABOVE SHALL BE 12 INCHES (305 MM) MINIMUM. (11B-609.3)

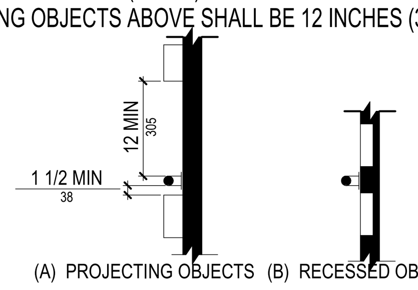

FIGURE 11B-609.3 - SPACING OF GRAB BARS

50. GRAB BARS SHALL BE INSTALLED IN A HORIZONTAL POSITION, 33 INCHES (840 MM) MINIMUM AND 36 INCHES (915 MM) MAXIMUM ABOVE THE FINISH FLOOR MEASURED TO THE TOP OF THE GRIPPING SURFACE, EXCEPT THAT AT WATER CLOSETS FOR CHILDREN'S USE COMPLYING WITH SECTION 11B-604.9, GRAB BARS SHALL BE INSTALLED IN A HORIZONTAL POSITION 18 INCHES (455 MM) MINIMUM AND 27 INCHES (685 MM) MAXIMUM ABOVE THE FINISH FLOOR MEASURED TO THE TOP OF THE GRIPPING SURFACE. THE HEIGHT OF THE LOWER GRAB BAR ON THE BACK WALL OF A BATHTUB SHALL COMPLY WITH SECTION 11B-607.4.1.1 OR 11B-607.4.2.1. (11B-609.4)

51. GRAB BARS AND ANY WALL OR OTHER SURFACES ADJACENT TO GRAB BARS SHALL BE FREE OF SHARP OR ABRASIVE ELEMENTS AND SHALL HAVE ROUNDED EDGES. (11B-609.5)

52. GRAB BARS SHALL NOT ROTATE WITHIN THEIR FITTINGS. (11B-609.6)

53. GRAB BARS SHALL BE INSTALLED IN ANY MANNER THAT PROVIDES A GRIPPING SURFACE AT THE SPECIFIED LOCATIONS AND THAT DOES NOT OBSTRUCT THE REQUIRED CLEAR FLOOR SPACE. (11B-609.7)

54. ALLOWABLE STRESSES SHALL NOT BE EXCEEDED FOR MATERIALS USED WHEN A VERTICAL OR HORIZONTAL FORCE OF 250 POUNDS (1112 N) IS APPLIED AT ANY POINT ON THE GRAB BAR, FASTENER, MOUNTING DEVICE, OR SUPPORTING STRUCTURE. (11B-609.8)

55. THE TOP OF BATHTUB SEATS SHALL BE 17 INCHES (430 MM) MINIMUM AND 19 INCHES MAXIMUM ABOVE THE BATHROOM FINISH FLOOR. THE DEPTH OF A REMOVABLE IN-TUB SEAT SHALL BE 15 INCHES (380 MM) MINIMUM AND 16 INCHES (405 MM) MAXIMUM. THE SEAT SHALL BE CAPABLE OF SECURE PLACEMENT. PERMANENT SEATS AT THE HEAD END OF THE BATHTUB SHALL BE 15 INCHES (380 MM) DEEP MINIMUM AND SHALL EXTEND FROM THE BACK WALL TO OR BEYOND THE OUTER EDGE OF THE BATHTUB. (11B-610.2)

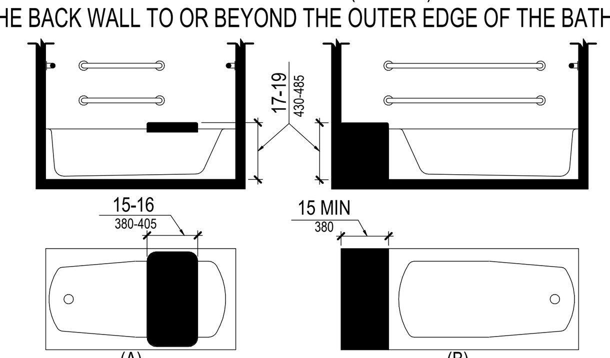

FIGURE 11B-610.2 - BATHTUB SEATS

56. A SEAT IN A STANDARD ROLL-IN SHOWER COMPARTMENT SHALL BE A FOLDING TYPE, SHALL BE INSTALLED ON THE SIDE WALL ADJACENT TO THE CONTROLS, AND SHALL EXTEND FROM THE BACK WALL TO A POINT WITHIN 3 INCHES OF THE COMPARTMENT ENTRY. A SEAT IN AN ALTERNATE ROLL-IN TYPE SHOWER COMPARTMENT SHALL BE A FOLDING TYPE, SHALL BE INSTALLED ON THE FRONT WALL OPPOSITE THE BACK WALL, AND SHALL EXTEND FROM THE ADJACENT SIDE WALL TO A POINT WITHIN 3 IN OF THE COMPARTMENT ENTRY. IN TRANSFER TYPE SHOWERS, THE SEAT SHALL EXTEND FROM THE BACK WALL TO A POINT WITHIN 3 IN OF THE COMPARTMENT ENTRY. THE TOP OF THE SEAT SHALL BE 17 INCHES MIN AND 19 INCHES MAX ABOVE THE BATHROOM FINISH FLOOR. WHEN FOLDED, THE SEAT SHALL EXTEND 6 INCHES MAX FROM THE MOUNTING WALL. SEATS SHALL COMPLY WITH SECTION 11B-610.3.1 OR 11B-610.3.2. (11B-610.3)

57. THE REAR EDGE OF A RECTANGULAR SEAT SHALL BE 2 1/2 INCHES MAX AND THE FRONT EDGE 15 INCHES MIN AND 16 INCHES MAX FROM THE SEAT WALL. THE SIDE EDGE OF THE SEAT SHALL BE 1 1/2 INCHES MAXIMUM FROM THE ADJACENT WALL. (11B-610.3.1)

58. THE REAR EDGE OF AN L-SHAPED SEAT SHALL BE 2 1/2 INCHES MAXIMUM AND THE FRONT EDGE 15 INCHES MIN AND 16 INCHES MAX FROM THE SEAT WALL. THE REAR EDGE OF THE "L" PORTION OF THE SEAT SHALL BE 1 1/2 INCHES MAX FROM THE WALL AND THE FRONT EDGE SHALL BE 14 INCHES MIN AND 15 INCHES MAX FROM THE WALL. THE END OF THE "L" SHALL BE 22 INCHES MIN AND 23 INCHES MAX FROM THE MAIN SEAT WALL. (11B-610.3.2)

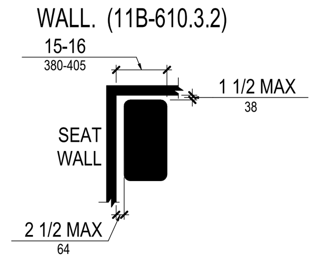

FIGURE 11B-610.3.1 - RECTANGULAR SHOWER SEAT

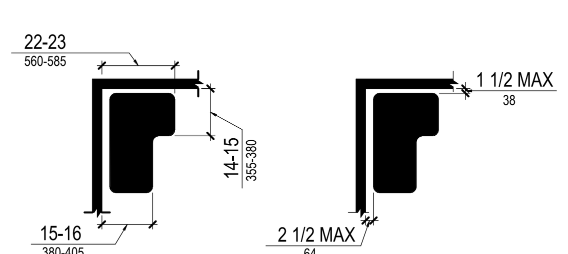

FIGURE 11B-610.3.2 - L-SHAPED SHOWER SEAT

Q. SIGNAGE

1. NEW OR ALTERED SIGNS SHALL BE PROVIDED IN ACCORDANCE WITH SECTION 11B-216 AND SHALL COMPLY WITH SECTION 11B-703. THE ADDITION OF OR REPLACEMENT OF SIGNS SHALL NOT TRIGGER ANY ADDITIONAL PATH OF TRAVEL REQUIREMENTS. (11B-216.1)
EXCEPTIONS:
1. BUILDING DIRECTORIES, MENUS, SEAT AND ROW DESIGNATIONS IN ASSEMBLY AREAS, OCCUPANT NAMES, BUILDING ADDRESSES, AND COMPANY NAMES AND LOGOS SHALL NOT BE REQUIRED TO COMPLY WITH SECTION 11B-216.
3. TEMPORARY, 7 DAYS OR LESS, SIGNS SHALL NOT BE REQUIRED TO COMPLY WITH SECTION 11B-216.

2. INTERIOR AND EXTERIOR SIGNS IDENTIFYING PERMANENT ROOMS AND SPACES SHALL COMPLY WITH SECTIONS 11B-703.1, 11B-703.2, 11B-703.3 AND 11B-703.5. WHERE PICTOGRAMS ARE PROVIDED AS DESIGNATIONS OF PERMANENT ROOMS AND SPACES, THE PICTOGRAMS SHALL COMPLY WITH SECTION 11B-703.6 AND SHALL HAVE TEXT DESCRIPTORS COMPLYING WITH SECTIONS 11B-703.2 AND 11B-703.5. (11B-216.2) EXCEPTION: EXTERIOR SIGNS THAT ARE NOT LOCATED AT THE DOOR TO THE SPACE THEY SERVE SHALL NOT BE REQUIRED TO COMPLY WITH 11B-703.2.

3. SIGNS REQUIRED BY CHAPTER 10, SECTION 1013.4 AT DOORS TO EXIT PASSAGEWAYS, EXIT DISCHARGE, AND EXIT STAIRWAYS SHALL COMPLY WITH SECTIONS 11B-703.1, 11B-703.3, AND 11B-703.5. (11B-216.4.1)

4. SIGNS REQUIRED BY CHAPTER 10, SECTION 1009.11 TO PROVIDE INSTRUCTIONS IN AREAS OF REFUGE SHALL COMPLY WITH SECTION 11B-703.5.. SIGNS REQUIRED BY CHAPTER 10, SECTION 1009.9 AT DOORS TO AREAS OF REFUGE AND EXTERIOR AREAS FOR ASSISTED RESCUE SHALL COMPLY WITH SECTIONS 11B-703.1, 11B-703.3 AND 11B-703.5 AND INCLUDE AN INTERNATIONAL SYMBOL OF ACCESSIBILITY COMPLYING WITH SECTION 11B-703.7.2.1. (11B-216.4.2)

5. SIGNS REQUIRED BY CHAPTER 10, SECTION 1009.10 TO PROVIDE DIRECTIONS TO ACCESSIBLE MEANS OF EGRESS SHALL COMPLY WITH SECTION 11B-703.5. (11B-216.4.3)

6. SIGNS REQUIRED BY CHAPTER 10, SECTION 1010.1.9.7, ITEM 6.4 AT DOORS WITH DELAYED EGRESS LOCKS SHALL COMPLY WITH SECTIONS 11B-703.1, 11B-703.2, 11B-703.3 AND 11B-703.5. (11B-216.4.4)

7. PARKING SPACES COMPLYING WITH SECTION 11B-502 SHALL BE IDENTIFIED BY SIGNS COMPLYING WITH SECTIONS 11B-502.6 AND 11B-502.8. (11B-216.5.1)

8. SIGNS INTENDED FOR USE BY PEDESTRIANS WITHIN PARKING FACILITIES, INCLUDING DIRECTIONAL OR INFORMATIONAL SIGNS INDICATING PARKING SECTIONS OR LEVELS, SHALL COMPLY WITH THE REQUIREMENTS OF SECTION 11B-216. (11B-216.5.2.1)

9. IN EXISTING BUILDINGS AND FACILITIES WHERE NOT ALL ENTRANCES COMPLY WITH SECTION 11B-404, ENTRANCES COMPLYING WITH SECTION 11B-404 SHALL BE IDENTIFIED BY THE INTERNATIONAL SYMBOL OF ACCESSIBILITY COMPLYING WITH SECTION 11B-703.7.2.1. DIRECTIONAL SIGNS COMPLYING WITH SECTION 11B-703.5 THAT INDICATE THE LOCATION OF THE NEAREST ENTRANCE COMPLYING WITH SECTION 11B-404. DIRECTIONAL SIGNS COMPLYING WITH SECTION 11B-703.5, INCLUDING THE INTERNATIONAL SYMBOL OF ACCESSIBILITY COMPLYING WITH SECTION 11B-703.7.2.1, INDICATING THE ACCESSIBLE ROUTE TO THE NEAREST ACCESSIBLE ENTRANCE SHALL BE PROVIDED AT JUNCTIONS WHEN THE ACCESSIBLE ROUTE DIVERGES FROM THE REGULAR CIRCULATION PATH. (11B-216.6)

10. WHERE EXISTING ELEVATORS DO NOT COMPLY WITH SECTION 11B-407, ELEVATORS COMPLYING WITH SECTION 11B-407 SHALL BE CLEARLY IDENTIFIED WITH THE INTERNATIONAL SYMBOL OF ACCESSIBILITY COMPLYING WITH SECTION 11B-703.7.2.1. EXISTING BUILDINGS THAT HAVE BEEN REMODELED TO PROVIDE SPECIFIC ELEVATORS FOR PUBLIC USE THAT COMPLY WITH THESE BUILDING STANDARDS SHALL HAVE THE LOCATION OF AND THE DIRECTIONS TO THESE ELEVATORS POSTED IN THE BUILDING LOBBY ON A SIGN COMPLYING WITH SECTION 11B-703.5, INCLUDING THE INTERNATIONAL SYMBOL OF ACCESSIBILITY COMPLYING WITH SECTION 11B-703.7.2.1. (11B-216.7)

11. WHERE EXISTING TOILET ROOMS OR BATHING ROOMS DO NOT COMPLY WITH SECTION 11B-603, DIRECTIONAL SIGNS INDICATING THE LOCATION OF THE NEAREST TOILET ROOM OR BATHING ROOM COMPLYING WITH SECTION 11B-603 WITHIN THE FACILITY SHALL BE PROVIDED. SIGNS SHALL COMPLY WITH SECTION 11B-703.5 AND SHALL INCLUDE THE INTERNATIONAL SYMBOL OF ACCESSIBILITY COMPLYING WITH SECTION 11B-703.7.2.1. WHERE EXISTING TOILET ROOMS OR BATHING ROOMS DO NOT COMPLY WITH SECTION 11B-603, THE TOILET ROOMS OR BATHING ROOMS COMPLYING WITH SECTION 11B-603 SHALL BE IDENTIFIED BY THE INTERNATIONAL SYMBOL OF ACCESSIBILITY COMPLYING WITH SECTION 11B-703.7.2.1. WHERE CLUSTERED SINGLE USER TOILET ROOMS OR BATHING FACILITIES ARE PERMITTED TO USE EXCEPTIONS TO SECTION 11B-213.2, TOILET ROOMS OR BATHING FACILITIES COMPLYING WITH SECTION 11B-603 SHALL BE IDENTIFIED BY THE INTERNATIONAL SYMBOL OF ACCESSIBILITY COMPLYING WITH SECTION 11B-703.7.2.1 UNLESS ALL TOILET ROOMS AND BATHING FACILITIES COMPLY WITH SECTION 11B-603. (11B-216.8)

12. GEOMETRIC SYMBOLS COMPLYING WITH SECTION 11B-703.7.2.6 SHALL BE PROVIDED AT ENTRANCES TO TOILET AND BATHING ROOMS. (11B-216.8.1)

13. SIGNS SHALL COMPLY WITH SECTION 11B-703. WHERE BOTH VISUAL AND TACTILE CHARACTERS ARE REQUIRED, EITHER ONE SIGN WITH BOTH VISUAL AND TACTILE CHARACTERS, OR TWO SEPARATE SIGNS, ONE WITH VISUAL, AND ONE WITH TACTILE CHARACTERS, SHALL BE PROVIDED. (11B-703.1)

14. RAISED CHARACTERS SHALL BE 1/32 INCH (0.8 MM) MINIMUM ABOVE THEIR BACKGROUND. (11B-703.2.1)

15. CHARACTERS SHALL BE UPPERCASE. (11B-703.2.2)

16. CHARACTERS SHALL BE SANS SERIF. CHARACTERS SHALL NOT BE ITALIC, OBLIQUE, SCRIPT, HIGHLY DECORATIVE, OR OF OTHER UNUSUAL FORMS. (11B-703.2.3)

17. CHARACTERS SHALL BE SELECTED FROM FONTS WHERE THE WIDTH OF THE UPPERCASE LETTER "O" IS 60 PERCENT MINIMUM AND 110 PERCENT MAXIMUM OF THE HEIGHT OF THE UPPERCASE LETTER "I". (11B-703.2.4)

18. CHARACTER HEIGHT MEASURED VERTICALLY FROM THE BASELINE OF THE CHARACTER SHALL BE 5/8 INCH (16 MM) MINIMUM AND 2 INCHES (51 MM) MAXIMUM BASED ON THE HEIGHT OF THE UPPERCASE LETTER "I". (11B-703.2.5)

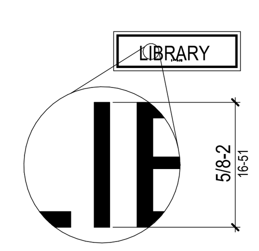

FIGURE 11B-703.2.5 - HEIGHT OF RAISED CHARACTERS

19. STROKE THICKNESS OF THE UPPERCASE LETTER "I" SHALL BE 15 PERCENT MAXIMUM OF THE HEIGHT OF THE CHARACTER. (11B-703.2.6)

20. CHARACTER SPACING SHALL BE MEASURED BETWEEN THE TWO CLOSEST POINTS OF ADJACENT RAISED CHARACTERS WITHIN A MESSAGE, EXCLUDING WORD SPACES. WHERE CHARACTERS HAVE RECTANGULAR CROSS SECTIONS, SPACING BETWEEN INDIVIDUAL RAISED CHARACTERS SHALL BE 1/8 INCH (3.2 MM) MINIMUM AND 4 TIMES THE RAISED CHARACTER STROKE WIDTH MAXIMUM. WHERE CHARACTERS HAVE OTHER CROSS SECTIONS, SPACING BETWEEN INDIVIDUAL RAISED CHARACTERS SHALL BE 1/16 INCH (1.6 MM) MINIMUM AND 4 TIMES THE RAISED CHARACTER STROKE WIDTH MAXIMUM AT THE BASE OF THE CROSS SECTIONS, AND 1/8 INCH (3.2 MM) MINIMUM AND 4 TIMES THE RAISED CHARACTER STROKE WIDTH MAXIMUM AT THE TOP OF THE CROSS SECTIONS. CHARACTERS SHALL BE SEPARATED FROM RAISED BORDERS AND DECORATIVE ELEMENTS 3/8 INCH (9.5 MM) MINIMUM. (11B-703.2.7)

21. SPACING BETWEEN THE BASELINES OF SEPARATE LINES OF RAISED CHARACTERS WITHIN A MESSAGE SHALL BE 135 PERCENT MINIMUM AND 170 PERCENT MAXIMUM OF THE RAISED CHARACTER HEIGHT. (11B-703.2.8)

22. BRAILLE SHALL BE CONTRACTED (GRADE 2) AND SHALL COMPLY WITH SECTION 11B-703.3 AND 11B-703.4. (11B-703.3)

23. BRAILLE DOTS SHALL HAVE A DOMED OR ROUNDED SHAPE AND SHALL COMPLY WITH TABLE 703.3.1. THE INDICATION OF AN UPPERCASE LETTER OR LETTERS SHALL ONLY BE USED BEFORE THE FIRST WORD OF SENTENCES, PROPER NOUNS AND NAMES, INDIVIDUAL LETTERS OF THE ALPHABET, INITIALS, AND ACRONYMS. (11B-703.3.1)

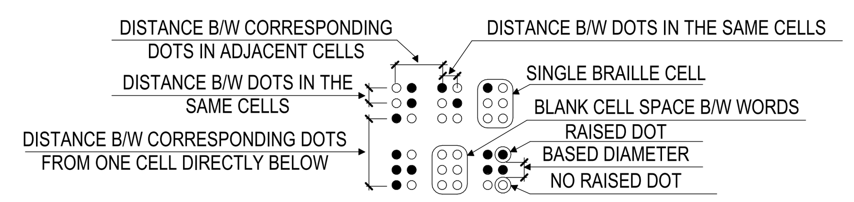

FIGURE 11B-703.3.1 - BRAILLE MEASUREMENT

24. BRAILLE SHALL BE POSITIONED BELOW THE CORRESPONDING TEXT IN A HORIZONTAL FORMAT, FLUSH LEFT, OR CENTERED. IF TEXT IS MULTI-LINED, BRAILLE SHALL BE PLACED BELOW THE ENTIRE TEXT. BRAILLE SHALL BE SEPARATED 3/8 INCH MINIMUM AND 1/2 INCH MAXIMUM FROM ANY OTHER TACTILE CHARACTERS AND 3/8 INCH MINIMUM FROM RAISED BORDERS AND DECORATIVE ELEMENTS. (11B-703.3.2)

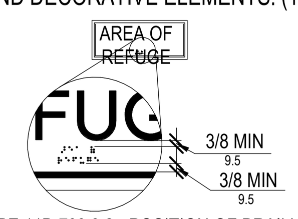

FIGURE 11B-703.3.2 - POSITION OF BRAILLE

25. TACTILE CHARACTERS ON SIGNS SHALL BE LOCATED 48 INCHES (1220 MM) MINIMUM ABOVE THE FINISH FLOOR OR GROUND SURFACE, MEASURED FROM THE BASELINE OF THE LOWEST BRAILLE CELLS AND 60 INCHES (1525 MM) MAXIMUM ABOVE THE FINISH FLOOR OR GROUND SURFACE, MEASURED FROM THE BASELINE OF THE HIGHEST LINE OF RAISED CHARACTERS. (11B-703.4.1)

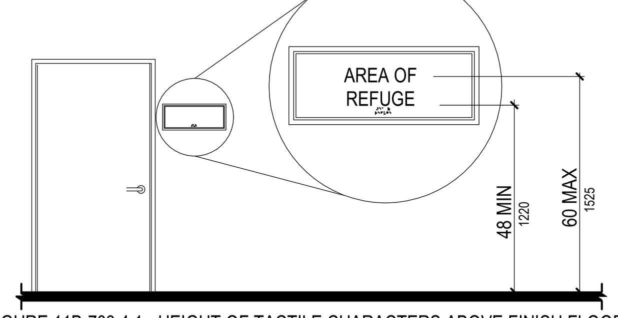

FIGURE 11B-703.4.1 - HEIGHT OF TACTILE CHARACTERS ABOVE FINISH FLOOR OR GROUND

26. WHERE A TACTILE SIGN IS PROVIDED AT A DOOR, THE SIGN SHALL BE LOCATED ALONGSIDE THE DOOR AT THE LATCH SIDE. WHERE A TACTILE SIGN IS PROVIDED AT DOUBLE DOORS WITH ONE ACTIVE LEAF, THE SIGN SHALL BE LOCATED ON THE INACTIVE LEAF. WHERE A TACTILE SIGN IS PROVIDED AT DOUBLE DOORS WITH TWO ACTIVE LEAFS, THE SIGN SHALL BE LOCATED TO THE RIGHT OF THE RIGHT HAND DOOR. WHERE THERE IS NO WALL SPACE AT THE LATCH SIDE OF A SINGLE DOOR OR AT THE RIGHT SIDE OF DOUBLE DOORS, SIGNS SHALL BE LOCATED ON THE NEAREST ADJACENT WALL. SIGNS CONTAINING TACTILE CHARACTERS SHALL BE LOCATED SO THAT A CLEAR FLOOR SPACE OF 18 INCHES (455 MM) MINIMUM BY 18 INCHES (455 MM) MINIMUM, CENTERED ON THE TACTILE CHARACTERS, IS PROVIDED BEYOND THE ARC OF ANY DOOR SWING BETWEEN THE CLOSED POSITION AND 45 DEGREE OPEN POSITION. WHERE PROVIDED, SIGNS IDENTIFYING PERMANENT ROOMS AND SPACES SHALL BE LOCATED AT THE ENTRANCE TO, AND OUTSIDE OF THE ROOM OR SPACE. WHERE PROVIDED, SIGNS IDENTIFYING EXITS SHALL BE LOCATED AT THE EXIT DOOR WHEN APPROACHED IN THE DIRECTION OF EGRESS TRAVEL. (11B-703.4.2)

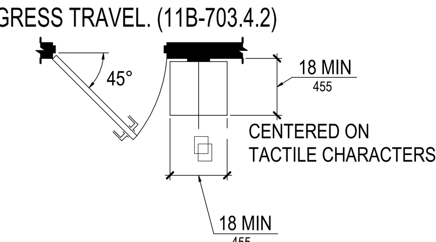

FIGURE 11B-703.4.2 - LOCATION OF TACTILE SIGNS AT DOORS

27. CHARACTERS AND THEIR BACKGROUND SHALL HAVE A NON-GLARE FINISH. CHARACTERS SHALL CONTRAST WITH THEIR BACKGROUND WITH EITHER LIGHT CHARACTERS ON A DARK BACKGROUND OR DARK CHARACTERS ON A LIGHT BACKGROUND. (11B-703.5.1)

28. CHARACTERS SHALL BE UPPERCASE OR LOWERCASE OR A COMBINATION OF BOTH. (11B-703.5.2)

29. MINIMUM CHARACTER HEIGHT SHALL COMPLY WITH TABLE 11B-703.5.5. VIEWING DISTANCE SHALL BE MEASURED AS THE HORIZONTAL DISTANCE BETWEEN THE CHARACTER AND AN OBSTRUCTION PREVENTING FURTHER APPROACH TOWARDS THE SIGN. CHARACTER HEIGHT SHALL BE BASED ON THE UPPERCASE LETTER "I". (11B-703.5.5)

30. VISUAL CHARACTERS SHALL BE 40 INCHES (1015 MM) MINIMUM ABOVE THE FINISH FLOOR OR GROUND. (11B-703.5.6)

31. CHARACTER SPACING SHALL BE MEASURED BETWEEN THE TWO CLOSEST POINTS OF ADJACENT CHARACTERS, EXCLUDING WORD SPACES. SPACING BETWEEN INDIVIDUAL CHARACTERS SHALL BE 10 PERCENT MINIMUM AND 35 PERCENT MAXIMUM OF CHARACTER HEIGHT. (11B-703.5.8)

32. SPACING BETWEEN THE BASELINES OF SEPARATE LINES OF CHARACTERS WITHIN A MESSAGE SHALL BE 135 PERCENT MINIMUM AND 170 PERCENT MAXIMUM OF THE CHARACTER HEIGHT. (11B-703.5.9)

33. PICTOGRAMS SHALL HAVE A FIELD HEIGHT OF 6 INCHES MINIMUM. CHARACTERS AND BRAILLE SHALL NOT BE LOCATED IN THE PICTOGRAM FIELD. (11B-703.6.1)

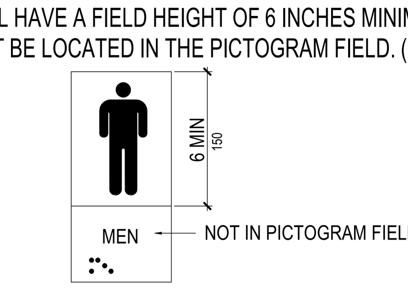

FIGURE 11B-703.6.1 - PICTOGRAM FIELD DARK-ON-LIGHT.

34. PICTOGRAMS AND THEIR FIELD SHALL HAVE A NON-GLARE FINISH. PICTOGRAMS SHALL CONTRAST WITH THEIR FIELD WITH EITHER A LIGHT PICTOGRAM ON A DARK FIELD OR A DARK PICTOGRAM ON A LIGHT FIELD. (11B-703.6.2)

35. PICTOGRAMS SHALL HAVE TEXT DESCRIPTORS LOCATED DIRECTLY BELOW THE PICTOGRAM FIELD. TEXT DESCRIPTORS SHALL COMPLY WITH SECTION 11B-703.2, 11B-703.3 AND 11B-703.4. (11B-703.6.3)

36. SYMBOLS OF ACCESSIBILITY AND THEIR BACKGROUND SHALL HAVE A NON-GLARE FINISH. SYMBOLS OF ACCESSIBILITY SHALL CONTRAST WITH THEIR BACKGROUND WITH EITHER A LIGHT SYMBOL ON A DARK BACKGROUND OR A DARK SYMBOL ON A LIGHT BACKGROUND. (11B-703.7.1)

37. GEOMETRIC SYMBOLS AT ENTRANCES TO TOILET AND BATHING ROOMS SHALL BE MOUNTED AT 58 INCHES MINIMUM AND 60 INCHES MAXIMUM ABOVE THE FINISH FLOOR OR GROUND SURFACE MEASURED FROM THE CENTERLINE OF THE SYMBOL. WHERE A DOOR IS PROVIDED THE SYMBOL SHALL BE MOUNTED WITHIN 1 INCH OF THE VERTICAL CENTERLINE OF THE DOOR. (11B-703.7.2.6)

38. A TRIANGLE SYMBOL SHALL BE LOCATED AT ENTRANCES TO MEN'S TOILET AND BATHING FACILITIES. THE TRIANGLE SYMBOL SHALL BE AN EQUILATERAL TRIANGLE 1/4 INCH THICK WITH EDGES 12 INCHES LONG AND A VERTEX POINTING UPWARD. THE COLOR OF THE TRIANGLE SYMBOL SHALL CONTRAST WITH THE COLOR OF THE DOOR OR SURFACE ON WHICH THE TRIANGLE SYMBOL IS MOUNTED, EITHER LIGHT ON A DARK BACKGROUND OR DARK ON A LIGHT BACKGROUND. EXCEPTION: WITHIN SECURE PERIMETER OF DETENTION AND CORRECTIONAL FACILITIES, GEOMETRIC SYMBOLS SHALL NOT BE REQUIRED TO BE 1/4 INCH THICK. (11B-703.7.2.6.1)

39. A CIRCLE SYMBOL SHALL BE LOCATED AT ENTRANCES TO WOMEN'S TOILET AND BATHING FACILITIES. THE CIRCLE SYMBOL SHALL BE 1/4 INCH THICK AND 12 INCHES IN DIAMETER. THE COLOR OF THE CIRCLE SYMBOL SHALL CONTRAST WITH THE COLOR OF THE DOOR OR SURFACE ON WHICH THE CIRCLE SYMBOL IS MOUNTED, EITHER LIGHT ON A DARK BACKGROUND OR DARK ON A LIGHT BACKGROUND. EXCEPTION: WITHIN SECURE PERIMETER OF DETENTION AND CORRECTIONAL FACILITIES, GEOMETRIC SYMBOLS SHALL NOT BE REQUIRED TO BE 1/4 INCH THICK. (11B-703.7.2.6.2)

40. A COMBINED CIRCLE AND TRIANGLE SYMBOL SHALL BE LOCATED AT ENTRANCES TO UNISEX TOILET AND BATHING FACILITIES. THE COMBINED CIRCLE AND TRIANGLE SYMBOL SHALL CONSIST OF A CIRCLE SYMBOL 1/4 INCH THICK AND 12 INCHES IN DIAMETER WITH A 1/4 INCH THICK EQUILATERAL TRIANGLE SYMBOL SUPERIMPOSED ON AND GEOMETRICALLY INSCRIBED WITHIN THE 12-INCH DIAMETER OF THE CIRCLE SYMBOL. THE VERTICES OF THE TRIANGLE SYMBOL SHALL BE LOCATED 1/4 INCH MAXIMUM FROM THE EDGE OF THE CIRCLE SYMBOL WITH A VERTEX POINTING UPWARD. THE COLOR OF THE TRIANGLE SYMBOL SHALL CONTRAST WITH THE COLOR OF THE CIRCLE SYMBOL, EITHER LIGHT ON A DARK BACKGROUND OR DARK ON A LIGHT BACKGROUND. THE COLOR OF THE CIRCLE SYMBOL SHALL CONTRAST WITH THE COLOR OF THE DOOR OR SURFACE ON WHICH THE COMBINED CIRCLE AND TRIANGLE SYMBOL IS MOUNTED, EITHER LIGHT ON A DARK BACKGROUND OR DARK ON A LIGHT BACKGROUND. EXCEPTION: WITHIN SECURE PERIMETER OF DETENTION AND CORRECTIONAL FACILITIES, GEOMETRIC SYMBOLS SHALL NOT BE REQUIRED TO BE 1/4 INCH THICK. (11B-703.7.2.6.3)

41. EDGES AND VERTICES ON GEOMETRIC SYMBOLS. EDGES SHALL BE EASED OR ROUNDED AT 1/16 INCH MINIMUM, OR CHAMFERED AT 1/8 INCH MAXIMUM. VERTICES SHALL BE RADIUSED BETWEEN 1/8 INCH MINIMUM AND 1/4 INCH MAXIMUM. (11B-703.7.2.6.4)

NOAA group architects
4990 N Harbor Drive, Ste 201
San Diego, CA 92106

tel: 619-297-8066
web: www.noaainc.com

LICENSED ARCHITECT
DANUBE TALANT
No. C38946
REN 11/30/2023
STATE OF CALIFORNIA

DO NOT SCALE DRAWINGS.
ANY DISCREPANCIES TO BE REVIEWED WITH THE ARCHITECT.

SAN DIEGO FAMILY DERMATOLOGY
222 W. MADISON AVENUE
EL CAJON, CA 92020

REVISION SCHEDULE

Nº	DATE	ISSUE
1	07/06/2023	1ST CITY REVIEW
2	08/22/2023	2ND CITY REVIEW

Project No: BP-2023-0267
Project Start Date: Issue Date
Drawn: Designer
Checked: Checker
Revision:
Sheet Name:

ADA NOTES

Scale: 1/8" = 1'-0"
Sheet No:

A-016

8/25/2023 10:51:15 AM

AIA California

2022 CALIFORNIA GREEN BUILDING STANDARDS CODE
NONRESIDENTIAL MANDATORY MEASURES, SHEET 1 (January 2023)

Y = YES
N/A = NOT APPLICABLE
RESPON. PARTY = RESPONSIBLE PARTY (ie: ARCHITECT, ENGINEER, OWNER, CONTRACTOR, INSPECTOR ETC.)

Y	N/A	RESPON. PARTY

CHAPTER 3 GREEN BUILDING
SECTION 301 GENERAL

301.1 SCOPE. Buildings shall be designed to include the green building measures specified as mandatory in the application checklists contained in this code. Voluntary green building measures are also included in the application checklists and may be included in the design and construction of structures covered by this code, but are not required unless adopted by a city, county, or city and county as specified in Section 101.7.

301.3 NONRESIDENTIAL ADDITIONS AND ALTERATIONS. [BSC-CG] The provisions of individual sections of Chapter 5 apply to newly constructed buildings, building additions of 1,000 square feet or greater, and/or building alterations with a permit valuation of $200,000 or above (for occupancies within the authority of California Building Standards Commission). Code sections relevant to additions and alterations shall only apply to the portions of the building being added or altered within the scope of the permitted work.

A code section will be designated by a banner to indicate where the code section only applies to newly constructed buildings [N] or to additions and/or alterations [A]. When the code section applies to both, no banner will be used.

301.3.1 Nonresidential additions and alterations that cause updates to plumbing fixtures only:

Note: On and after January 1, 2014, certain commercial real property, as defined in Civil Code Section 1101.3, shall have its noncompliant plumbing fixtures replaced with appropriate water-conserving plumbing fixtures under specific circumstances. See Civil Code Section 1101.1 *et seq.* for definitions, types of commercial real property affected, effective dates, circumstances necessitating replacement of noncompliant plumbing fixtures, and duties and responsibilities for ensuring compliance.

301.3.2 Waste Diversion. The requirements of Section 5.408 shall be required for additions and alterations whenever a permit is required for work.

301.4 PUBLIC SCHOOLS AND COMMUNITY COLLEGES. (see GBSC)
301.5 HEALTH FACILITIES. (see GBSC)

SECTION 302 MIXED OCCUPANCY BUILDINGS

302.1 MIXED OCCUPANCY BUILDINGS. In mixed occupancy buildings, each portion of a building shall comply with the specific green building measures applicable to each specific occupancy.

SECTION 303 PHASED PROJECTS

303.1 PHASED PROJECTS. For shell buildings and others constructed for future tenant improvements, only those code measures relevant to the building components and systems considered to be new construction (or newly constructed) shall apply.

303.1.1 Initial Tenant improvements. The provisions of this code shall apply only to the initial tenant improvements to a project. Subsequent tenant improvements shall comply with the scoping provisions in Section 301.3 non-residential additions and alterations.

ABBREVIATION DEFINITIONS:

HCD	Department of Housing and Community Development
BSC	California Building Standards Commission
DSA-SS	Division of the State Architect, Structural Safety
OSHPD	Office of Statewide Health Planning and Development
LR	Low Rise
HR	High Rise
AA	Additions and Alterations
N	New

CHAPTER 5 NONRESIDENTIAL MANDATORY MEASURES
DIVISION 5.1 PLANNING AND DESIGN

SECTION 5.101 GENERAL
5.101.1 SCOPE
The provisions of this chapter outline planning, design and development methods that include environmentally responsible site selection, building design, building siting and development to protect, restore and enhance the environmental quality of the site and respect the integrity of adjacent properties.

SECTION 5.102 DEFINITIONS
5.102.1 DEFINITIONS
The following terms are defined in Chapter 2 *(and are included here for reference)*

CUTOFF LUMINAIRES. Luminaires whose light distribution is such that the candela per 1000 lamp lumens does not numerically exceed 25 (2.5 percent) at an angle of 90 degrees above nadir, and 100 (10 percent) at a vertical angle of 80 degrees above nadir. This applies to all lateral angles around the luminaire.

LOW-EMITTING AND FUEL EFFICIENT VEHICLES.
Eligible vehicles are limited to the following:

1. Zero emission vehicle (ZEV), enhanced advanced technology PZEV (enhanced AT ZEV) or transitional zero emission vehicles (TZEV) regulated under CCR, Title 13, Section 1962.
2. High-efficiency vehicles, regulated by U.S. EPA, bearing a fuel economy and greenhouse gas rating od 9 oe 10 as regulated under 40 CFR Section 600 Subpart D.

NEIGHBORHOOD ELECTRIC VEHICLE (NEV). A motor vehicle that meets the definition of "low-speed vehicle" either in Section 385.5 of the Vehicle Code or in 49CFR571.500 (as it existed on July 1, 2000), and is certified to zero-emission vehicle standards.

TENANT-OCCUPANTS. Building occupants who inhabit a building during its normal hours of operation as permanent occupants, such as employees, as distinguished from customers and other transient visitors.

VANPOOL VEHICLE. Eligible vehicles are limited to any motor vehicle, other than a motortruck or truck tractor, designed for carrying more than 10 but not more than 15 persons including the driver, which is maintained and used primarily for the nonprofit work-related transportation of adults for the purpose of ridesharing.

Note: Source: Vehicle Code, Division 1, Section 668

ZEV. Any vehicle certified to zero-emission standards.

SECTION 5.106 SITE DEVELOPMENT
5.106.1 STORM WATER POLLUTION PREVENTION FOR PROJECTS THAT DISTURB LESS THAN ONE ACRE OF LAND. Newly constructed projects and additions which disturb less than one acre of land, and are not part of a larger common plan of development or sale, shall prevent the pollution of storm water runoff from the construction activities through one or more of the following measures:

5.106.1.1 Local ordinance. Comply with a lawfully enacted storm water management and/or erosion control ordinance.

5.106.1.2 Best Management Practices (BMPs). Prevent the loss of soil through wind or water erosion by implementing an effective combination of erosion and sediment control and good housekeeping BMPs.

1. Soil loss BMPs that should be considered for implementation as appropriate for each project include, but are not limited to, the following:
   a. Scheduling construction activity during dry weather, when possible.
   b. Preservation of natural features, vegetation, soil, and buffers around surface waters.
   c. Drainage swales or lined ditches to control stormwater flow.
   d. Mulching or hydroseeding to stabilize disturbed soils.
   e. Erosion control to protect slopes.
   f. Protection of storm drain inlets (gravel bags or catch basin inserts).
   g. Perimeter sediment control (perimeter silt fence, fiber rolls).
   h. Sediment trap or sediment basin to retain sediment on site.
   i. Stabilized construction exits.
   j. Wind erosion control.
   k. Other soil loss BMPs acceptable to the enforcing agency.
2. Good housekeeping BMPs to manage construction equipment, materials, non-stormwater discharges and wastes that should be considered for implementation as appropriate for each project include, but are not limited to, the following:
   a. Dewatering activities.
   b. Material handling and waste management.
   c. Building materials stockpile management.
   d. Management of washout areas (concrete, paints, stucco, etc.).
   e. Control of vehicle/equipment fueling to contractor's staging area.
   f. Vehicle and equipment cleaning performed off site.
   g Spill prevention and control.
   h. Other housekeeping BMPs acceptable to the enforcing agency.

5.106.2 STORMWATER POLLUTION PREVENTION FOR PROJECTS THAT DISTURB ONE OR MORE ACRES OF LAND. Comply with all lawfully enacted stormwater discharge regulations for projects that (1) disturb one acre or more of land, or (2) disturb less than one acre of land but are part of a larger common plan of development sale.

Note: Projects that (1) disturb one acre or more of land, or (2) disturb less than one acre of land but are part of the larger common plan of development or sale must comply with the post-construction requirements detailed in the applicable National Pollutant Discharge Elimination System (NPDES) General permit for Stormwater Discharges Associated with Construction and Land Disturbance Activities issued by the State Water Resources Control Board or the Lahontan Regional Water Quality Control Board (for projects in the Lake Tahoe Hydrologic Unit).

The NPDES permits require postconstruction runoff (post-project hydrology) to match the preconstruction runoff (pre-project hydrology) with the installation of postconstruction stormwater management measures. The NPDES permits emphasize runoff reduction through on-site stormwater use, interception, evapotranspiration, and infiltration through nonstructural controls, such as Low Impact Development (LID) practices, and conversation design measures. Stormwater volume that cannot be addressed using nonstructural practices is required to be captured in structural practices and be approved by the enforcing agency.

Refer to the current applicable permits on the State Water Resources Control Board website at: www.waterboards.ca.gov/constructionstormwater. Consideration to the stormwater runoff management measures should be given during the initial design process for appropriate integration into site development.

5.106.4 BICYCLE PARKING. For buildings within the authority of California Building Standards Commission as specified in Section 103, comply with Section 5.106.4.1. For buildings within the authority of the Division of the State Architect pursuant to Section 105, comply with Section 5.106.4.2

5.106.4.1 Bicycle parking. [BSC-CG] Comply with Sections 5.106.4.1.1 and 5.106.4.1.2; or meet the applicable local ordinance, whichever is stricter.

5.106.4.1.1 Short-term bicycle parking. If the new project or an addition or alteration is anticipated to generate visitor traffic, provide permanently anchored bicycle racks within 200 feet of the visitors' entrance, readily visible to passers-by, for 5% of new visitor motorized vehicle parking spaces being added, with a minimum of one two-bike capacity rack.
Exception: Additions or alterations which add nine or less visitor vehicular parking spaces.

5.106.4.1.2 Long-term bicycle parking. For new buildings with tenant spaces that have 10 or more tenant-occupants, provide secure bicycle parking for 5 percent of the tenant-occupant vehicular parking spaces with a minimum of one bicycle parking facility.

5.106.4.1.3 For additions or alterations that add 10 or more tenant-occupant vehicular parking spaces, provide secure bicycle parking for 5 percent of the tenant vehicular parking spaces being added, with a minimum of one bicycle parking facility.

5.106.4.1.4 For new shell buildings in phased projects provide secure bicycle parking for 5 percent of the anticipated tenant-occupant vehicular parking spaces with a minimum of one bicycle parking facility.

5.106.4.1.5 Acceptable bicycle parking facility for Sections 5.106.4.1.2, 5.106.4.1.3, and 5.106.4.1.4 shall be convenient from the street and shall meet one of the following:

1. Covered, lockable enclosures with permanently anchored racks for bicycles;
2. Lockable bicycle rooms with permanently anchored racks; or
3. Lockable, permanently anchored bicycle lockers.

Note: Additional information on recommended bicycle accommodations may be obtained from Sacramento Area Bicycle Advocates.

5.106.4.2 Bicycle parking. [DSA-SS] For public schools and community colleges, comply with Sections 5.106.4.2.1 and 5.106.4.2.2

5.106.4.2.1 Student bicycle parking. Provide permanently anchored bicycle racks conveniently accessed with a minimum of four two-bike capacity racks per new building.
5.106.4.2.2 Staff bicycle parking. Provide permanent, secure bicycle parking conveniently accessed with a minimum of two staff bicycle parking spaces per new building. Acceptable bicycle parking facilities shall be convenient from the street or staff parking area and shall meet one of the following:

1. Covered, lockable enclosures with permanently anchored racks for bicycles;
2. Lockable bicycle rooms with permanently anchored racks; or
3. Lockable, permanently anchored bicycle lockers.

5.106.5.3 Electric vehicle (EV) charging. [N] Construction to provide electric vehicle infrastructure and facilitate electric vehicle charging shall comply with Section 5.106.5.3.1 and shall be provided in accordance with regulations in the California Building Code and the California Electrical Code.

Exceptions:
1. On a case-by-case basis where the local enforcing agency has determined compliance with this section is not feasible based upon one of the following conditions:
   a. Where there is no local utility power supply
   b. Where the local utility is unable to supply adequate power.
   c. Where there is evidence suitable to the local enforcement agency substantiating the local utility infrastructure design requirements, directly related to the implementation of Section 5.106.5.3, may adversely impact the construction cost of the project.
2. Parking spaces accessible only by automated mechanical car parking systems are not required to comply with this code section

5.106.5.3.1 EV capable spaces.
[N] EV capable spaces shall be provided in accordance with Table 5.106.5.3.1 and the following requirements:
1. Raceways complying with the California Electrical Code and no less that 1-inch (25 mm) diameter shall be provided and shall originate at a service panel or a subpanel(s) serving the area, and shall terminate in close proximity to the proposed location of the EV capable and into a suitable listed cabinet, box,enclosure or equivalent. A common raceway may be used to serve multiple EV charging spaces.
2. A service panel or subpanel (s) shall be provided with panel space and electrical load capacity for a dedicated 208/240 volt, 40-ampere minimum branch circuit for each EV capable space, with delivery of 30-ampere minimum to an installed EVSE at each EVCS.
3. The electrical system and any on-site distribution transformers shall have sufficient capacity to supply full rated amperage at each EV capable space.
4. The service panel or subpanel circuit directory shall identify the reserved overcurrent protective devices space(s) as "EV CAPABLE". The raceway termination location shall be permanently and visibly marked as "EV CAPABLE."

Note: A parking space served by electric vehicle supply equipment or designed as a future EV charging space shall count as at least one standard automobile parking space only for the purpose of complying with any applicable minimum parking space requirements established by an enforcement agency. See vehicle Code Section 22511.2 for further details.

TABLE 5.106.5.3.1

TOTAL NUMBER OF ACTUAL PARKING SPACES	NUMBER OF REQUIRED EV CAPABLE SPACES	NUMBER OF EVCS (EV CAPABLE SPACES PROVIDED WITH EVSE)^2
0-9	0	0
10-25	2	0
26-50	8	2
51-75	13	3
76-100	17	4
101-150	25	6
151-200	35	9
201 AND OVER	20% of total[1]	25% of EV capable spaces[1]

1. Where there is insufficient electrical supply.
2. The number of required EVCS (EV capable spaces provided with EVSE) in column 3 count towards the total number of required EV capable spaces shown in column 2.

5.106.5.3.2 Electric vehicle charging stations (EVCS)
EV capable spaces shall be provided with EVSE to create EVCS in the number indicated in Table 5.106.5.3.1. The EVCS required by Table 5.106.5.3.1 may be provided with EVSE in any combination of Level 2 and Direct Current Fast Charging (DCFC), except that at least one Level 2 EVSE shall be provided.

One EV charger with multiple connectors capable of charging multiple EVs simultaneously shall be permitted if the electrical load capacity required by Section 5.106.5.3.1 for each EV capable space is accumulatively supplied to the EV charger.

The installation of each DCFC EVSE shall be permitted to reduce the minimum number of required EV capable spaces without EVSE by five and reduce proportionally the required electrical load capacity to the service panel or subpanel.

5.106.5.3.3 Use of automatic load management systems (ALMS).
ALMS shall be permitted for EVCS. When ALMS is installed, the required electrical load capacity specified in Section
5.106.5.3.1 for each EVCS may be reduced when serviced by an EVSE controlled by an ALMS. Each EVSE controlled by an ALMS shall deliver a minimum 30 amperes to an EV when charging one vehicle and shall deliver a minimum 3.3 kW while simultaneously charging multiple EVs.

5.106.5.3.4 Accessible EVCS.
When EVSE is installed, accessible EVSC shall be provided in accordance with the *California Building Code*, Chapter 11B, Section 11B-228.3.
Note: For EVCS signs, refer to Caltrans Traffic Operations Policy Directive 13-01 (Zero Emission Vehicle Signs and Pavement Markings) or its successor(s).

5.106.5.4 Electric Vehicle (EV) charging: medium-duty and heavy-duty. [N]
Construction shall comply with section 5.106.5.4.1 to facilitate future installation of electric vehicle supply equipment (EVSE). Construction for warehouses, grocery stores and retail stores with planned off-street loading spaces shall also comply with Section 5.106.5.4.1 for future installation of medium- and heavy-duty EVSE.
Exceptions:
1. On a case-by-case basis where the local enforcing agency has determined compliance with this section is not feasible based upon one of the following conditions:
   a. Where there is no local utility power supply.
   b. Where the local utility is unable to supply adequate power.
   c. Where there is evidence suitable to the local enforcing agency substantiating that additional local utility infrastructure design requirements, directly related to the implementation of Section 5.106.5.3, may adversely impact the construction cost of the project.

When EVSE(s) is/are installed, it shall be in accordance with the *California Building Code*, the *California Electrical Code* and as follows:

5.106.5.4.1 Electric vehicle charging readiness requirements for warehouse, grocery stores and retail stores with planned off-street loading spaces.
[N] In order to avoid future demolition when adding EV charging supply and distribution equipment, spare raceways(s) or busway(s) and adequate capacity for transformers(s), service panels(s) or subpanel(s) shall be installed at the time of construction in accordance with the California Electrical Code. Construction plans and specifications shall include but are not limited to, the following:
1. The transformer, main service equipment and subpanel shall meet the minimum power requirement in Table 5.106.5.4.1 to accommodate the dedicated branch circuits for the future installation of EVSE.
2. The construction documents shall indicate on or more location(s) convenient to the planned offstreet loading space(s) reserved for medium-and heavy-duty ZEV charging cabinets and charging dispensers, and a pathway reserved for routing of conduit from the termination of the raceway(s) or busway(s) to the charging cabinet(s) and dispenser(s) as shown in Table 5.106.5.4.1
3. Raceway(s) or busway(s) originating at a main service panel or a subpanel(s) serving the area where potential future medium-and heavy-duty EVSE will be located and shall terminate in close proximity to the potential future location of the charging equipments for medium- and heavy-duty vehicles.
4. The raceway(s) or busway(s) shall be sufficient size to carry the minimum additional system load to the future location of the charging for medium- and heavy-duty ZEVs as shown in Table 5.106.5.4.1.

TABLE 5.106.5.4.1 RACEWAY CONDUIT AND PANEL POWER REQUIREMENTS FOR MEDIUM- AND HEAVY-DUTY EVSE [N]

BUILDING TYPE	BUILDING SIZE (SQ. FT.)	NUMBER OF OFF-STREET LOADING SPACES	ADDITIONAL CAPACITY REQUIRED (KVA) FOR RACEWAY & BUSWAY AND TRANSFORMER & PANEL
Grocery	10,000 to 90,000	1 or 2	200
		3 or Greater	400
	Greater than 90,000	1 or Greater	400
Retail	10,000 to 135,000	1 or 2	200
		3 or Greater	400
	Greater than 135,000	1 or Greater	400
Warehouse	20,000 to 256,000	1 or 2	200
		3 or Greater	400
	Greater than 256,000	1 or Greater	400

5.106.8 LIGHT POLLUTION REDUCTION. [N]. I Outdoor lighting systems shall be designed and installed to comply with the following:

1. The minimum requirements in the California Energy Code for Lighting Zones 0-4 as defined in Chapter 10, Section 10-114 of the California Administrative Code; and
2. Backlight (B) ratings as defined in IES TM-15-11 (shown in Table A-1 in Chapter 8);
3. Uplight and Glare ratings as defined in California Energy Code (shown in Tables 130.2-A and 130.2-B in Chapter 8) and
4. Allowable BUG ratings not exceeding those shown in Table 5.106.8, [N] or Comply with a local ordinance lawfully enacted pursuant to Section 101.7, whichever is more stringent.

Exceptions: [N]

1. Luminaires that qualify as exceptions in Sections 130.2 (b) and 140.7 of the California Energy Code.
2. Emergency lighting.
3. Building facade meeting the requirements in Table 140.7-B of the California Energy Code, Part 6.
4. Custom lighting features as allowed by the local enforcing agency, as permitted by Section 101.8 Alternate materials, designs and methods of construction.
5. Luminaires with less than 6,200 initial luminaire lumens.

TABLE 5.106.8 [N] MAXIMUM ALLOWABLE BACKLIGHT, UPLIGHT AND GLARE (BUG) RATINGS [1,2]

ALLOWABLE RATING	LIGHTING ZONE LZ0	LIGHTING ZONE LZ1	LIGHTING ZONE LZ2	LIGHTING ZONE LZ3	LIGHTING ZONE LZ4
MAXIMUM ALLOWABLE BACKLIGHT RATING [3]					
Luminaire greater than 2 mounting heights (MH) from property line	N/A	No Limit	No Limit	No Limit	No Limit
Luminaire back hemisphere is 1-2 MH from property line	N/A	B2	B3	B4	B4
Luminaire back hemisphere is 0.5-1 MH from property line	N/A	B1	B2	B3	B3
Luminaire back hemisphere is less than 0.5 MH from property line	N/A	B0	B0	B1	B2
MAXIMUM ALLOWABLE UPLIGHT RATING (U)					
For area lighting [3]	N/A	U0	U0	U0	U0
For all other outdoor lighting,including decorative luminaires	N/A	U1	U2	U3	UR
MAXIMUM ALLOWABLE GLARE RATING [5] (G)					
MAXIMUM ALLOWABLE GLARE RATING [5] (G)	N/A	G1	G2	G3	G4
MAXIMUM ALLOWABLE GLARE RATING [5] (G)	N/A	G0	G1	G1	G2
MAXIMUM ALLOWABLE GLARE RATING [5] (G)	N/A	G0	G0	G1	G1
MAXIMUM ALLOWABLE GLARE RATING [5] (G)	N/A	G0	G0	G0	G1

1. IESNA Lighting Zones 0 and 5 are not applicable; refer to Lighting Zones as defined in the *California Energy Code* and Chapter 10 of the *Callifornia Administrative Code.*

2. For property lines that abut public walkways, bikeways, plazas and parking lots, the property line may be considered to be 5 feet beyond the actual property line for purpose of determining compliance with this section. For property lines that abut public roadways and public transit corridors, the property line may be considered to be the centerline of the public roadway or public transit corridor for the purpose of determining compliance with this section.

3. General lighting luminaires in areas such as outdoor parking, sales or storage lots shall meet these reduced ratings. Decorative luminaries located in these areas shall meet *U*-value limits for "all other outdoor lighting"

5.106.8.1 Facing- Backlight
Luminaries within 2MH of a property line shall be oriented so that the nearest property line is behind the fixture, and shall comply with the backlight rating specified in Table 5.106.8 based on the lighting zone and distance to the nearest point of that property line.
Exception: Corners. If two property lines (or two segments of the same property line) have equidistant point to the luminaire, then the luminaire may be oriented so that the intersection of the two lines (the corner) is directly behind the luminaire. The luminaire shall still use the distance to the nearest points(s) on the property lines to determine the required backlight rating.

5.106.8.2 Facing-Glare.
For luminaires covered by 5.106.8.1, if a property line also exists within or extends into the front hemisphere within 2MH of the luminaire then the luminaire shall comply with the more stringent glare rating specified in Table 5.106.8 based on the lighting zone and distance to the nearest point on the nearest property line within the front hemisphere.

Note: [N]
1.See also *California Building Code*, Chapter 12, Section 1205.6 for college campus lighting requirements for parking facilities and walkways.
2.Refer to Chapter 8 (Compliance Forms, Worksheets and Reference Material) for IES TM-15-11 Table A-1, *California Energy Code* Tables 130.2-A and 130.2-B.
3. Refer to the *California Building Code* for requirements for additions and alterations.

5.106.10 GRADING AND PAVING. Construction plans shall indicate how site grading or a drainage system will manage all surface water flows to keep water from entering buildings. Examples of methods to manage surface water include, but are not limited to, the following:

1. Swales.
2. Water collection and disposal systems.
3. French drains.
4. Water retention gardens.
5. Other water measures which keep surface water away from buildings and aid in groundwater recharge.
Exception: Additions and alterations not altering the drainage path.

5.106.12 SHADE TREES [DSA-SS]. Shade Trees shall be planted to comply with Sections 5.106.12.1, 5.106.12.2, and 5.106.12.3. Percentages shown shall be measured at noon on the summer solstice. Landscape irrigation necessary to establish and maintain tree health shall comply with Section 5.304.6.

5.106.12.1 Surface parking areas. Shade tree plantings, minimum #10 container size or equal, shall be installed to provide shade over 50 percent of the parking area within 15 years.

Exceptions: Surface parking area covered by solar photovoltaic shade structures with roofing materials that comply with Table A5.106.11.2.2 in Appendix A5 shall be permitted in whole or in part in lieu of shade tree planting.

5.106.12.2 Landscape areas. Shade tress plantings, minimum #10 container size or equal shall be installed to provide shade of 20% of the landscape area within 15 years.

Exceptions: Playfields for organized sport activity are not included in the total area calculation.

5.106.12.3. Hardscape areas. Shade tree plantings, minimum #10 container size or equal shall be installed to provide shade over 20 percent of the hardscape area within 15 years.

Exceptions:
1. Walks, hardscape areas covered by solar photovoltaic shade structures or shade structures with roofing materials that comply with Table A5.106.11.2.2 in Appendix A5 shall be permitted in whole or in part in lieu of shade tree planting.
2. Designated and marked play areas of organized sport activity are not included in the total area calculation.

DIVISION 5.2 ENERGY EFFICIENCY
SECTION 5.201 GENERAL
5.201.1 Scope [BSC-CG]. *California Energy Code [DSA-SS].* For the purposes of mandatory energy efficiency standards in this code, the California Energy Commission will continue to adopt mandatory building standards.

DIVISION 5.3 WATER EFFICIENCY AND CONSERVATION
SECTION 5.301 GENERAL
5.301.1 Scope. The provisions of this chapter shall establish the means of conserving water use indoors, outdoors and in wastewater conveyance.

SECTION 5.302 DEFINITIONS
5.302.1 Definitions. The following terms are defined in Chapter 2 *(and are included here for reference)*

EVAPOTRANSPIRATION ADJUSTMENT FACTOR (ETAF) [DSA-SS]. An adjustment factor when applied to reference evapotranspiration that adjusts for plant factors and irrigation efficiency, which ae two major influences on the amount of water that needs to be applied to the landscape.

FOOTPRINT AREA [DSA-SS]. The total area of the furthest exterior wall of the structure projected to natural grade, not including exterior areas such as stairs, covered walkways, patios and decks.

METERING FAUCET. A self-closing faucet that dispenses a specific volume of water for each actuation cycle. The volume or cycle duration can be fixed or adjustable.

GRAYWATER. Pursuant to Health and Safety Code Section 17922.12, "graywater" means untreated wastewater that has not been contaminated by any toilet discharge, has not been affected by infectious, contaminated, or unhealthy bodily wastes, and does not present a threat from contamination by unhealthful processing, manufacturing, or operating wastes. "Graywater" includes, but is not limited to wastewater from bathtubs, showers, bathroom washbasins, clothes washing machines and laundry tubs, but does not include waste water from kitchen sinks or dishwashers.

MODEL WATER EFFICIENT LANDSCAPE ORDINANCE (MWELO). The California ordinance regulating landscape design, installation and maintenance practices that will ensure commercial, multifamily and other developer installed landscapes greater than 2500 square feet meet an irrigation water budget developed based on landscaped area and climatological parameters.

MODEL WATER EFFICIENT LANDSCAPE ORDINANCE (MWELO). [HCD] The California model ordinance (California Code of Regulations, Title 23, Division 2, Chapter 2.7), regulating landscape design, installation and maintenance practices. Local agencies are required to adopt the updated MWELO, or adopt a local ordinance at least as effective as the MWELO.

POTABLE WATER. Water that is drinkable and meets the U.S. Environmental Protection Agency (EPA) Drinking Water Standards. See definition in the California Plumbing Code, Part 5.

POTABLE WATER. [HCD] Water that is satisfactory for drinking, culinary, and domestic purposes, and meets the U.S. Environmental Protection Agency (EPA) Drinking Water Standards and the requirements of the Health Authority Having Jurisdiction.

RECYCLED WATER. Water which, as a result of treatment of waste, is suitable for a direct beneficial use or a controlled use that would not otherwise occur [Water Code Section 13050 (n)]. Simply put, recycled water is water treated to remove waste matter attaining a quality that is suitable to use the water again.

SUBMETER. [HCD 1] A secondary device beyond a meter that measures water consumption of an individual rental unit within a multiunit residential structure or mixed-use residential and commercial structure. (See Civic Code Section 1954.202 (g) and Water code Section 517 for additional details.)

WATER BUDGET. Is the estimated total landscape irrigation water use which shall not exceed the maximum applied water allowance calculated in accordance with the Department of Water Resources Model Efficient Landscape Ordinance (MWELO).

DISCLAIMER: *THIS DOCUMENT IS PROVIDED AND INTENDED TO BE USED AS A MEANS TO INDICATE AREAS OF COMPLIANCE WITH THE CALIFORNIA GREEN BUILDING STANDARDS (CALGREEN) CODE. DUE TO THE VARIABLES BETWEEN BUILDING DEPARTMENT JURISDICTIONS, THIS CHECKLIST IS TO BE USED ON AN INDIVIDUAL PROJECT BASIS AND MAY BE MODIFIED BY THE END USER TO MEET THOSE INDIVIDUAL NEEDS. THE END USER ASSUMES ALL RESPONSIBILITY ASSOCIATED WITH THE USE OF THIS DOCUMENT, INCLUDING VERIFICATION WITH THE FULL CODE.*

NOAA group architects
4990 N Harbor Drive, Ste 201
San Diego, CA 92106
tel: 619-297-8066
web: www.noaainc.com

LICENSED ARCHITECT
DANUBE TALANT
No. C38946
REN 11/30/2023
STATE OF CALIFORNIA

DO NOT SCALE DRAWINGS. ANY DISCREPANCIES TO BE REVIEWED WITH THE ARCHITECT.

SAN DIEGO FAMILY DERMATOLOGY
222 W. MADISON AVENUE
EL CAJON, CA 92020

REVISION SCHEDULE

Nº	DATE	ISSUE
1	07/06/2023	1ST CITY REVIEW
2	08/22/2023	2ND CITY REVIEW

Project No: BP-2023-0267
Project Start Date: Issue Date
Drawn: Designer
Checked: Checker
Revision:
Sheet Name: NON-RES CALGREEN
Scale: 12" = 1'-0"
Sheet No: A-021

8/25/2023 10:51:17 AM

AIA California

2022 CALIFORNIA GREEN BUILDING STANDARDS CODE
NONRESIDENTIAL MANDATORY MEASURES, SHEET 2 (January 2023)

Y = YES
N/A = NOT APPLICABLE
RESPON. PARTY = RESPONSIBLE PARTY (ie: ARCHITECT, ENGINEER, OWNER, CONTRACTOR, INSPECTOR ETC.)

Y | N/A | RESPON. PARTY

SECTION 5.303 INDOOR WATER USE

5.303.1 METERS. Separate submeters or metering devices shall be installed for the uses described in Sections 503.1.1 and 503.1.2.

5.303.1.1 Buildings in excess of 50,000 square feet. Separate submeters shall be installed as follows:

1. For each individual leased, rented or other tenant space within the building projected to consume more than 100 gal/day (380 L/day), including, but not limited to, spaces used for laundry or cleaners, restaurant or food service, medical or dental office, laboratory, or beauty salon or barber shop.
2. Where separate submeters for individual building tenants are unfeasible, for water supplied to the following subsystems:
   a. Makeup water for cooling towers where flow through is greater than 500 gpm (30 L/s).
   b. Makeup water for evaporative coolers greater than 6 gpm (0.04 L/s).
   c. Steam and hot water boilers with energy input more than 500,000 Btu/h (147 kW).

5.303.1.2 Excess consumption. A separate submeter or metering device shall be provided for any tenant within a new building or within an addition that is projected to consume more than 1,000 gal/day.

5.303.3 WATER CONSERVING PLUMBING FIXTURES AND FITTINGS. Plumbing fixtures (water closets and urinals) and fittings (faucets and showerheads) shall comply with the following:

5.303.3.1 Water Closets. The effective flush volume of all water closets shall not exceed 1.28 gallons per flush. Tank-type water closets shall be certified to the performance criteria of the U.S. EPA WaterSense Specification for Tank-Type toilets.

Note: The effective flush volume of dual flush toilets is defined as the composite, average flush volume of two reduced flushes and one full flush.

5.303.3.2 Urinals.

5.303.3.2.1 Wall-mounted Urinals. The effective flush volume of wall-mounted urinals shall not exceed 0.125 gallons per flush.

5.303.3.2.2 Floor-mounted Urinals. The effective flush volume of floor-mounted or other urinals shall not exceed 0.5 gallons per flush.

5.303.3.3 Showerheads. [BSC-CG]

5.303.3.3.1 Single showerhead. Showerheads shall have a maximum flow rate of not more than 1.8 gallons per minute at 80 psi. Showerheads shall be certified to the performance criteria of the U.S. EPA WaterSense Specification for Showerheads.

5.303.3.3.2 Multiple showerheads serving one shower. When a shower is served by more than one showerhead, the combined flow rate of all the showerheads and/or other shower outlets controlled by a single valve shall not exceed 1.8 gallons per minute at 80 psi, or the shower shall be designed to allow only one shower outlet to be in operation at a time.
Note: A hand-held shower shall be considered a showerhead.

5.303.3.4 Faucets and fountains.

5.303.3.4.1 Nonresidential Lavatory faucets. Lavatory faucets shall have a maximum flow rate of not more than 0.5 gallons per minute at 60 psi.

5.303.3.4.2 Kitchen faucets. Kitchen faucets shall have a maximum flow rate of not more than 1.8 gallons per minute at 60 psi. Kitchen faucets may temporarily increase the flow above the maximum rate, but not to exceed 2.2 gallons per minute at 60 psi, and must default to a maximum flow rate of 1.8 gallons per minute at 60 psi.

5.303.3.4.3 Wash fountains. Wash fountains shall have a maximum flow rate of not more than1.8 gallons per minute/20 [rim space (inches) at 60 psi].

5.303.3.4.4 Metering faucets. Metering faucets shall not deliver more than 0.20 gallons per cycle.

5.303.3.4.5 Metering faucets for wash fountains. Metering faucets for wash fountains shall have a maximum flow rate of not more than 0.20 gallons per minute/20 [rim space (inches) at 60 psi].

Note: Where complying faucets are unavailable, aerators or other means may be used to achieve reduction.

5.303.3.4.6 Pre-rinse spray value
When installed, shall meet the requirements in the *California Code of Regulations*, Title 20 (Appliance Efficiency Regulations), Section 1605.1 (h)(4) Table H-2, Section 1605.3 (h)(4)(A), and Section 1607 (d)(7), and shall be equipped with an integral automatic shutoff.

FOR REFERENCE ONLY: The following table and code section have been reprinted from the *California Code of Regulations*, Title 20 (Appliance Efficiency Regulations), Section 1605.1 (h)(4) and Section 1605.3 (h)(4)(A).

TABLE H-2

STANDARDS FOR COMMERCIAL PRE-RINSE SPRAY VALUES MANUFACTURED ON OR AFTER JANUARY 28, 2019

PRODUCT CLASS [spray force in ounce force (ozf)]	MAXIMUM FLOW RATE (gpm)
Product Class 1 (≤ 5.0 ozf)	1.00
Product Class 2 (> 5.0 ozf and ≤ 8.0 ozf)	1.20
Product Class 3 (> 8.0 ozf)	1.28

5.303.4 COMMERCIAL KITCHEN EQUIPMENT.

5.303.4.1 Food Waste Disposers. Disposers shall either modulate the use of water to no more than 1 gpm when the disposer is not in use (not actively grinding food waste/no-load) or shall automatically shut off after no more than 10 minutes of inactivity. Disposers shall use no more than 8 gpm of water.
Note: This code section does not affect local jurisdiction authority to prohibit or require disposer installation.

5.303.5 AREAS OF ADDITION OR ALTERATION. For those occupancies within the authority of the California Building Standards Commission as specified in Section 103, the provisions of Section 5.303.3 and 5.303.4 shall apply to new fixtures in additions or areas of alteration to the building.

5.303.6 STANDARDS FOR PLUMBING FIXTURES AND FITTINGS. Plumbing fixtures and fittings shall be installed in accordance with the *California Plumbing Code*, and shall meet the applicable standards referenced in Table 1701.1 of the *California Plumbing Code* and in Chapter 6 of this code.

SECTION 5.304 OUTDOOR WATER USE

5.304.1 OUTDOOR POTABLE WATER USE IN LANDSCAPE AREAS. Nonresidential developments shall comply with a local water efficient landscape ordinance or the current California Department of Water Resources' Model Water Efficient Landscape Ordinance (MWELO), whichever is more stringent.

Notes:
1. The Model Water Efficient Landscape Ordinance (MWELO) is located in the California Code of Regulations, Title 23, Chapter 2.7, Division 2.
2. MWELO and supporting documents, including a water budget calculator, are available at: https://www.water.ca.gov/.

5.304.6 OUTDOOR POTABLE WATER USE IN LANDSCAPE AREAS. For public schools and community colleges, landscape projects as described in Sections 5.304.6.1 and 5.304.6.2 shall comply with the California Department of Water Resources Model Water Efficient Landscape Ordinance (MWELO) commencing with Section 490 of Chapter 2.7, Division 2, Title 23, *California Code of Regulations*, except that the evapotranspiration adjustment factor (ETAF) shall be 0.65 with an additional water allowance for special landscape areas (SLA) of 0.35.

Exception: Any project with an aggregate landscape area of 2,500 square feet or less may comply with the prescriptive measures contained in Appendix D of the MWELO.

5.304.6.1 Newly constructed landscapes. New construction projects with an aggregate landscape area equal to or greater than 500 square feet.

5.304.6.2 Rehabilitated landscapes. Rehabilitated landscape projects with an aggregate landscape area equal to or greater than 1,200 square feet.

DIVISION 5.4 MATERIAL CONSERVATION AND RESOURCE EFFICIENCY

SECTION 5.401 GENERAL

5.401.1 SCOPE. The provisions of this chapter shall outline means of achieving material conservation and resource efficiency through protection of buildings from exterior moisture, construction waste diversion, employment of techniques to reduce pollution through recycling of materials, and building commissioning or testing and adjusting.

SECTION 5.402 DEFINITIONS

5.402.1 DEFINITIONS. The following terms are defined in Chapter 2 *(and are included here for reference)*

ADJUST. To regulate fluid flow rate and air patterns at the terminal equipment, such as to reduce fan speed or adjust a damper.

BALANCE. To proportion flows within the distribution system, including sub-mains, branches and terminals, according to design quantities.

BUILDING COMMISSIONING. A systematic quality assurance process that spans the entire design and construction process, including verifying and documenting that building systems and components are planned, designed, installed, tested, operated and maintained to meet the owner's project requirements.

ORGANIC WASTE. Food waste, green waste, landscape and pruning wste, nonhazardous wood waste, and food soiled paper waste that is mixed in with food waste.

TEST. A procedure to determine quantitative performance of a system or equipment

SECTION 5.407 WATER RESISTANCE AND MOISTURE MANAGEMENT

5.407.1 WEATHER PROTECTION. Provide a weather-resistant exterior wall and foundation envelope as required by California Building Code Section 1402.2 (Weather Protection), manufacturer's installation instructions or local ordinance, whichever is more stringent.

5.407.2 MOISTURE CONTROL. Employ moisture control measures by the following methods.

5.407.2.1 Sprinklers. Design and maintain landscape irrigation systems to prevent spray on structures.

5.407.2.2 Entries and openings. Design exterior entries and/or openings subject to foot traffic or wind-driven rain to prevent water intrusion into buildings as follows:

5.407.2.2.1 Exterior door protection. Primary exterior entries shall be covered to prevent water intrusion by using nonabsorbent floor and wall finishes within at least 2 feet around and perpendicular to such openings plus at least one of the following:

1. An installed awning at least 4 feet in depth.
2. The door is protected by a roof overhang at least 4 feet in depth.
3. The door is recessed at least 4 feet.
4. Other methods which provide equivalent protection.

5.407.2.2.2 Flashing. Install flashings integrated with a drainage plane.

SECTION 5.408 CONSTRUCTION WASTE REDUCTION, DISPOSAL AND RECYCLING

5.408.1 CONSTRUCTION WASTE MANAGEMENT. Recycle and/or salvage for reuse a minimum of 65% of the non-hazardous construction and demolition waste in accordance with Section 5.408.1.1, 5.408.1.2 or 5.408.1.3; or meet a local construction and demolition waste management ordinance, whichever is more stringent.

5.408.1.1 Construction waste management plan. Where a local jurisdiction does not have a construction and demolition waste management ordinance, submit a construction waste management plan that:

1. Identifies the construction and demolition waste materials to be diverted from disposal by efficient usage, recycling, reuse on the project or salvage for future use or sale.
2. Determines if construction and demolition waste materials will be sorted on-site (source-separated) or bulk mixed (single stream).
3. Identifies diversion facilities where construction and demolition waste material collected will be taken.
4. Specifies that the amount of construction and demolition waste materials diverted shall be calculated by weight or volume, but not by both.

5.408.1.2 Waste Management Company. Utilize a waste management company that can provide verifiable documentation that the percentage of construction and demolition waste material diverted from the landfill complies with this section.

Note: The owner or contractor shall make the determination if the construction and demolition waste material will be diverted by a waste management company.

Exceptions to Sections 5.408.1.1 and 5.408.1.2:

1. Excavated soil and land-clearing debris.
2. Alternate waste reduction methods developed by working with local agencies if diversion or recycle facilities capable of compliance with this item do not exist.
3. Demolition waste meeting local ordinance or calculated in consideration of local recycling facilities and markets.

5.408.1.3 Waste stream reduction alternative. The combined weight of new construction disposal that does not exceed two pounds per square foot of building area may be deemed to meet the 65% minimum requirement as approved by the enforcing agency.

5.408.1.4 Documentation. Documentation shall be provided to the enforcing agency which demonstrates compliance with Sections 5.408.1.1, through 5.408.1.3. The waste management plan shall be updated as necessary and shall be accessible during construction for examination by the enforcing agency.

Notes:

1. Sample forms found in "A Guide to the California Green Building Standards Code (Nonresidential)" located www.dgs.ca.gov/BSC/Resources/Page-Content/Building-Standards-Commission-Resources-List-Folder/CALGreen may be used to assist in documenting compliance with the waste management plan.
2. Mixed construction and demolition debris processors can be located at the California Department of Resources Recycling and Recovery (CalRecycle).

5.408.2 UNIVERSAL WASTE. [A] Additions and alterations to a building or tenant space that meet the scoping provisions in Section 301.3 for nonresidential additions and alterations, shall require verification that Universal Waste items such as fluorescent lamps and ballast and mercury containing thermostats as well as other California prohibited Universal Waste materials are disposed of properly and are diverted from landfills. A list of prohibited Universal Waste materials shall be included in the construction documents.

Note: Refer to the Universal Waste Rule link at: http://www.dtsc.ca.gov/universalwaste/

5.408.3 EXCAVATED SOIL AND LAND CLEARING DEBRIS. 100 percent of trees, stumps, rocks and associated vegetation and soils resulting primarily from land clearing shall be reused or recycled. For a phased project, such material may be stockpiled on site until the storage site is developed.

Exception: Reuse, either on or off-site, of vegetation or soil contaminated by disease or pest infestation.

Notes:

1. If contamination by disease or pest infestation is suspected, contact the County Agricultural Commissioner and follow its direction for recycling or disposal of the material.
2. For a map of know pest and/or disease quarantine zones, consult with the California Department of Food and Agriculture. (www.cdfa.ca.gov)

SECTION 5.410 BUILDING MAINTENANCE AND OPERATIONS

5.410.1 RECYCLING BY OCCUPANTS. Provide readily accessible areas that serve the entire building and are identified for the depositing, storage and collection of non-hazardous materials for recycling, including (at a minimum) paper, corrugated cardboard, glass, plastics, organic waste, and metals or meet a lawfully enacted local recycling ordinance, if more restrictive.

Exception: Rural jurisdictions that meet and apply for the exemption in Public Resources Code 42649.82 (a)(2)(A) et seq. shall also be exempt from the organic waste portion of this section.

5.410.1.1 Additions. All additions conducted within a 12-month period under single or multiple permits, resulting in an increase of 30% or more in floor area, shall provide recycling areas on site.

Exception: Additions within a tenant space resulting in less than a 30% increase in the tenant space floor area.

5.410.1.2 Sample ordinance. Space allocation for recycling areas shall comply with Chapter 18, Part 3, Division 30 of the *Public Resources Code*. Chapter 18 is known as the California Solid Waste Reuse and Recycling Access Act of 1991 (Act).

Note: A sample ordinance for use by local agencies may be found in Appendix A of the document at the CalRecycle's web site.

5.410.2 COMMISSIONING. [N] New buildings 10,000 square feet and over. For new buildings 10,000 square feet and over, building commissioning shall be included in the design and construction processes of the building project to verify that the building systems and components meet the owner's or owner representative's project requirements. Commissioning shall be performed in accordance with this section by trained personnel with experience on projects of comparable size and complexity. For I-occupancies that are not regulated by OSHPD or for I-occupancies and L-occupancies that are not regulated y the California Energy Code Section 100.0 Scope, all requirements in Sections 5.410.2 through 5.410.2.6 shall apply.

Note: For energy-related systems under the scope (Section 100) of the California Energy Code, including heating, ventilation, air conditioning (HVAC) systems and controls, indoor lighting systems and controls, as well as water heating systems and controls, refer to California Energy Code Section 120.8 for commissioning requirements

Commissioning requirements shall include:

1. Owner's or Owner representative's project requirements.
2. Basis of design.
3. Commissioning measures shown in the construction documents.
4. Commissioning plan.
5. Functional performance testing.
6. Documentation and training.
7. Commissioning report.

Exceptions:

1. Unconditioned warehouses of any size.
2. Areas less than 10,000 square feet used for offices or other conditioned accessory spaces within unconditioned warehouses.
3. Tenant improvements less than 10,000 square feet as described in Section 303.1.1.
4. Open parking garages of any size, or open parking garage areas, of any size, within a structure.

Note: For the purposes of this section, unconditioned shall mean a building, area, or room which does not provide heating and or air conditioning.

Informational Notes:

1. IAS AC 476 is an accreditation criteria for organizations providing training and/or certification of commissioning personnel. AC 476 is available to the Authority Having Jurisdiction as a reference for qualifications of commissioning personnel. AC 476 des not certify individuals to conduct functional performance tests or to adjust and balance systems.

2. Functional performance testing for heating, ventilation, air conditioning systems and lighting controls must be performed in compliance with the *California Energy Code*.

5.410.2.1 Owner's or Owner Representative's Project Requirements (OPR). [N] The expectations and requirements of the building appropriate to its phase shall be documented before the design phase of the project begins. This documentation shall include the following:
1. Environmental and sustainability goals.
2. Building sustainable goals.
3. Indoor environmental quality requirements.
4. Project program, including facility functions and hours of operation, and need for after hours operation.
5. Equipment and systems expectations.
6. Building occupant and operation and maintenance (O&M) personnel expectations.

5.410.2.2 Basis of Design (BOD). [N] A written explanation of how the design of the building systems meets the OPR shall be completed at the design phase of the building project. The Basis of Design document shall cover the following systems:

1. Renewable energy systems.
2. Landscape irrigation systems.
3. Water reuse system.

5.410.2.3 Commissioning plan. [N] Prior to permit issuance a commissioning plan shall be completed to document how the project will be commissioned. The commissioning plan shall include the following:
1. General project information.
2. Commissioning goals.
3. Systems to be commissioned. Plans to test systems and components shall include:
   a. An explanation of the original design intent.
   b. Equipment and systems to be tested, including the extent of tests.
   c. Functions to be tested.
   d. Conditions under which the test shall be performed.
   e. Measurable criteria for acceptable performance.
4. Commissioning team information.
5. Commissioning process activities, schedules and responsibilities. Plans for the completion of commissioning shall be included.

5.410.2.4 Functional performance testing. [N] Functional performance tests shall demonstrate the correct installation and operation of each component, system and system-to-system interface in accordance with the approved plans and specifications. Functional performance testing reports shall contain information addressing each of the building components tested, the testing methods utilized, and include any readings and adjustments made.

5.410.2.5 Documentation and training. [N] A Systems Manual and Systems Operations Training are required, including Occupational Safety and Health Act (OSHA) requirements in *California Code of Regulations* (CCR), Title 8, Section 5142, and other related regulations.

5.410.2.5.1 Systems manual. [N] Documentation of the operational aspects of the building shall be completed within the systems manual and delivered to the building owner or representative. The systems manual shall include the following:
1. Site information, including facility description, history and current requirements.
2. Site contact information.
3. Basic operations and maintenance, including general site operating procedures, basic troubleshooting, recommended maintenance requirements, site events log.
4. Major systems.
5. Site equipment inventory and maintenance notes.
6. A copy of verifications required by the enforcing agency or this code.
7. Other resources and documentation, if applicable.

5.410.2.5.2 Systems operations training. [N] A program for training of the appropriate maintenance staff for each equipment type and/or system shall be developed and documented in the commissioning report and shall include the following:
1. System/equipment overview (what it is, what it does and with what other systems and/or equipment it interfaces).
2. Review and demonstration of servicing/preventive maintenance.
3. Review of the information in the Systems Manual.
4. Review of the record drawings on the system/equipment.

5.410.2.6 Commissioning report. [N] A report of commissioning process activities undertaken through the design and construction phases of the building project shall be completed and provided to the owner or representative.

5.410.4 TESTING AND ADJUSTING. New buildings less than 10,000 square feet. Testing and adjusting of systems shall be required for new buildings less than 10,000 square feet or new systems to serve an addition or alteration subject to Section 303.1.

5.410.4.2 (Reserved)

Note: For energy-related systems under the scope (Section 100) of the California Energy Code, including heating, ventilation, air conditioning (HVAC) systems and controls, indoor lighting system and controls, as well as water heating systems and controls, refer to California Energy Code Section 120.8 for commissioning requirements and Sections 120.5, 120.6, 130.4, and 140.9(b)3 for additional testing requirements of specific systems.

5.410.4.2 Systems. Develop a written plan of procedures for testing and adjusting systems. Systems to be included for testing and adjusting shall include at a minimum, as applicable to the project:

1. Renewable energy systems.
2. Landscape irrigation systems.
3. Water reuse systems.

5.410.4.3 Procedures. Perform testing and adjusting procedures in accordance with manufacturer's specifications and applicable standards on each system.

5.410.4.3.1 HVAC balancing. In addition to testing and adjusting, before a new space-conditioning system serving a building or space is operated for normal use, the system shall be balanced in accordance with the procedures defined by the Testing Adjusting and Balancing Bureau National Standards; the National Environmental Balancing Bureau Procedural Standards; Associated Air Balance Council National Standards or as approved by the enforcing agency.

5.410.4.4 Reporting. After completion of testing, adjusting and balancing, provide a final report of testing signed by the individual responsible for performing these services.

5.410.4.5 Operation and maintenance (O & M) manual. Provide the building owner or representative with detailed operating and maintenance instructions and copies of guaranties/warranties for each system. O & M instructions shall be consistent with OSHA requirements in CCR, Title 8, Section 5142, and other related regulations.

5.410.4.5.1 Inspections and reports. Include a copy of all inspection verifications and reports required by the enforcing agency.

DIVISION 5.5 ENVIRONMENTAL QUALITY

SECTION 5.501 GENERAL

5.501.1 SCOPE. The provisions of this chapter shall outline means of reducing the quantity of air contaminants that are odorous, irritating, and/or harmful to the comfort and well-being of a building's installers, occupants and neighbors.

SECTION 5.502 DEFINITIONS

5.502.1 DEFINITIONS. The following terms are defined in Chapter 2 *(and are included here for reference)*

ARTERIAL HIGHWAY. A general term denoting a highway primarily for through traffic usually on a continuous route.

A-WEIGHTED SOUND LEVEL (dBA). The sound pressure level in decibels as measured on a sound level meter using the internationally standardized A-weighting filter or as computed from sound spectral data to which A-weighting adjustments have been made.

1 BTU/HOUR. British thermal units per hour, also referred to as Btu. The amount of heat required to raise one pound of water one degree Fahrenheit per hour, a common measure of heat transfer rate. A ton of refrigeration is 12,000 Btu, the amount of heat required to melt a ton (2,000 pounds) of ice at 32^0 Fahrenheit.

COMMUNITY NOISE EQUIVALENT LEVEL (CNEL). A metric similar to the day-night average sound level (Ldn), except that a 5 decibel adjustment is added to the equivalent continuous sound exposure level for evening hours (7pm to 10pm) in addition to the 10 dB nighttime adjustment used in the Ldn.

COMPOSITE WOOD PRODUCTS. Composite wood products include hardwood plywood, particleboard and medium density fiberboard. "Composite wood products" does not include hardboard, structural plywood, structural panels, structural composite lumber, oriented strand board, glued laminated timber, timber, prefabricated wood I–joists or finger–jointed lumber, all as specified in California Code of Regulations (CCR), Title 17, Section 93120.1(a).

Note: See CCR, Title 17, Section 93120.1.

DAY-NIGHT AVERAGE SOUND LEVEL (Ldn). The A-weighted equivalent continuous sound exposure level for a 24-hour period with a 10 dB adjustment added to sound levels occurring during nighttime hours (10p.m. to 7 a.m.).

DECIBEL (db). A measure on a logarithmic scale of the magnitude of a particular quantity (such as sound pressure, sound power, sound intensity) with respect to a reference quantity.

ELECTRIC VEHICLE (EV). An automotive-type vehicle for on-road use, such as passenger automobiles, buses, trucks, vans, neighborhood electric vehicles, electric motorcycles, and the like, primarily powered by an electric motor that draws current from a rechargeable storage battery, fuel cell, photovoltaic array, or other source of electric current. Plug-in hybrid electric vehicles (PHEV) are considered electric vehicles. For purposes of the *California Electrical Code*, off-road, self-propelled electric vehicles, such as industrial trucks, hoists, lifts, transports, golf carts, airline ground support equipment, tractors, boats, and the like, are not included.

ELECTRIC VEHICLE CHARGING STATION(S) (EVCSj). One or more spaces intended for charging electric vehicles.

ELECTRIC VEHICLE SUPPLY EQUIPMENT (EVSE). The conductors, including the ungrounded, grounded, and equipment grounding conductors and the electric vehicle connectors, attachment plugs, and all other fittings, devices, power outlets, or apparatus installed specifically for the purpose of transferring energy between the premises wiring and the electric vehicle.

ENERGY EQUIVALENT (NOISE) LEVEL (Leq). The level of a steady noise which would have the same energy as the fluctuating noise level integrated over the time of period of interest.

EXPRESSWAY. An arterial highway for through traffic which may have partial control of access, but which may or may not be divided or have grade separations at intersections.

FREEWAY. A divided arterial highway with full control of access and with grade separations at intersections.

GLOBAL WARMING POTENTIAL (GWP). The radiative forcing impact of one mass-based unit of a given greenhouse gas relative to an equivalent unit of carbon dioxide over a given period of time. Carbon dioxide is the reference compound with a GWP of one.

GLOBAL WARMING POTENTIAL VALUE (GWP VALUE). A 100-year GWP value published by the Intergovernmental Panel on Climate Change (IPCC) in either its Second Assessment Report (SAR) (IPCC, 1995); or its Fourth Assessment A-3 Report (AR4) (IPCC, 2007). The SAR GWP values are found in column "SAR (100-yr)" of Table 2.14.; the AR4 GWP values are found in column "100 yr" of Table 2.14.

HIGH-GWP REFRIGERANT. A compound used as a heat transfer fluid or gas that is: (a) a chlorofluorocarbon, a hdrochlorofluorocarbon, a hydrofluorocarbon, a perfluorocarbon, or any compound or blend of compounds, with a GWP value equal to or greater than 150, or (B) any ozone depleting substance as defined in Title 40 of the Code of Federal Regulations, Part 82, sec.82.3 (as amended March 10, 2009).

LONG RADIUS ELBOW. Pipe fitting installed between two lengths of pipe or tubing to allow a change of direction, with a radius 1.5 times the pipe diameter.

LOW-GWP REFRIGERANT. A compound used as a heat transfer fluid or gas that: (A) has a GWP value less than 150, and (B) is not an ozone depleting substance as defined in Title 40 of the Code of Federal Regulations, Part 82, sec.82.3 (as amended March 10, 2009).

MERV. Filter minimum efficiency reporting value, based on ASHRAE 52.2–1999.

MAXIMUM INCREMENTAL REACTIVITY (MIR). The maximum change in weight of ozone formed by adding a compound to the "Base REactive Organic Gas (ROG) Mixture" per weight of compound added, expressed to hundreths of a gram (g O^3/g ROC).

PRODUCT-WEIGHTED MIR (PWMIR). The sum of all weighted-MIR for all ingredients in a product subject to this article. The PWMIR is the total product reactivity expressed to hundredths of a gram of ozone formed per gram of product (excluding container and packaging).

PSIG. Pounds per square inch, guage.

REACTIVE ORGANIC COMPOUND (ROC). Any compound that has the potential, once emitted, to contribute to ozone formation in the troposphere.

SCHRADER ACCESS VALVES. Access fittings with a valve core installed.

SHORT RADIUS ELBOW. Pipe fitting installed between two lengths of pipe or tubing to allow a change of direction, with a radius 1.0 times the pipe diameter.

SUPERMARKET. For the purposes of Section 5.508.2, a supermarket is any retail food facility with 8,000 square feet or more conditioned area, and that utilizes either refrigerated display cases, or walk-in coolers or freezers connected to remote compressor units or condensing units.

VOC. A volatile organic compound broadly defined as a chemical compound based on carbon chains or rings with vapor pressures greater than 0.1 millimeters of mercury at room temperature. These compounds typically contain hydrogen and may contain oxygen, nitrogen and other elements. See CCR Title 17, Section 94508(a)

Note: Where specific regulations are cited from different agencies such as SCAQMD, ARB, etc., the VOC definition included in that specific regulation is the one that prevails for the specific measure in question.

SECTION 5.503 FIREPLACES

5.503.1 FIREPLACES. Install only a direct-vent sealed-combustion gas or sealed wood-burning fireplace, or a sealed woodstove or pellet stove, and refer to residential requirements in the California Energy Code, Title 24, Part 6, Subchapter 7, Section 150. Woodstoves, pellet stoves and fireplaces shall comply with applicable local ordinances.

5.503.1.1 Woodstoves. Woodstoves and pellet stoves shall comply with U.S. EPA New Source Performance Standards (NSPS) emission limits as applicable, and shall have a permanent label indicating they are certified to meet the emission limits.

SECTION 5.504 POLLUTANT CONTROL

5.504.1 TEMPORARY VENTILATION. The permanent HVAC system shall only be used during construction if necessary to condition the building or areas of addition or alteration within the required temperature range for material and equipment installation. If the HVAC system is used during construction, use return air filters with a Minimum Efficiency Reporting Value (MERV) of 8, based on ASHRAE 52.2-1999, or an average efficiency of 30% based on ASHRAE 52.1-1992 Replace all filters immediately prior to occupancy, or, if the building is occupied during alteration, at the conclusion of construction.

5.504.3 Covering of duct openings and protection of mechanical equipment during construction. At the time of rough installation and during storage on the construction site until final startup of the heating, cooling and ventilation equipment, all duct and other related air distribution component openings shall be covered with tape, plastic, sheetmetal or other methods acceptable to the enforcing agency to reduce the amount of dust, water and debris which may enter the system.

DISCLAIMER: *THIS DOCUMENT IS PROVIDED AND INTENDED TO BE USED AS A MEANS TO INDICATE AREAS OF COMPLIANCE WITH THE CALIFORNIA GREEN BUILDING STANDARDS (CALGREEN) CODE. DUE TO THE VARIABLES BETWEEN BUILDING DEPARTMENT JURISDICTIONS, THIS CHECKLIST IS TO BE USED ON AN INDIVIDUAL PROJECT BASIS AND MAY BE MODIFIED BY THE END USER TO MEET THOSE INDIVIDUAL NEEDS. THE END USER ASSUMES ALL RESPONSIBILITY ASSOCIATED WITH THE USE OF THIS DOCUMENT, INCLUDING VERIFICATION WITH THE FULL CODE.*

NOAA group architects
4990 N Harbor Drive, Ste 201
San Diego, CA 92106

tel: 619-297-8066
web: www.noaainc.com

LICENSED ARCHITECT
DANUBE TALANT
No. C38946
REN 11/30/2023
STATE OF CALIFORNIA

DO NOT SCALE DRAWINGS.
ANY DISCREPANCIES TO BE REVIEWED WITH THE ARCHITECT.

SAN DIEGO FAMILY DERMATOLOGY
222 W. MADISON AVENUE
EL CAJON, CA 92020

REVISION SCHEDULE

Nº	DATE	ISSUE
1	07/06/2023	1ST CITY REVIEW
2	08/22/2023	2ND CITY REVIEW

Project No: BP-2023-0267
Project Start Date: Issue Date
Drawn: Designer
Checked: Checker
Revision:
Sheet Name:

NON-RES CALGREEN

Scale: 12" = 1'-0"
Sheet No:

A-022

8/25/2023 10:51:19 AM

2022 CALIFORNIA GREEN BUILDING STANDARDS CODE
NONRESIDENTIAL MANDATORY MEASURES, SHEET 3 (January 2023)

AIA California

Y = YES
N/A = NOT APPLICABLE
RESPON. PARTY = RESPONSIBLE PARTY (ie: ARCHITECT, ENGINEER, OWNER, CONTRACTOR, INSPECTOR ETC.)

5.504.4 FINISH MATERIAL POLLUTANT CONTROL. Finish materials shall comply with Sections 5.504.4.1 through 5.504.4.6.

5.504.4.1 Adhesives, sealants and caulks. Adhesives, sealants, and caulks used on the project shall meet the requirements of the following standards:

1. Adhesives, adhesive bonding primers, adhesive primers, sealants, sealant primers and caulks shall comply with local or regional air pollution control or air quality management district rules where applicable, or SCAQMD Rule 1168 VOC limits, as shown in Tables 5.504.4.1 and 5.504.4.2. Such products also shall comply with the Rule 1168 prohibition on the use of certain toxic compounds (chloroform, ethylene dichloride, methylene chloride, perchloroethylene and trichloroethylene), except for aerosol products as specified in subsection 2, below.

2. Aerosol adhesives, and smaller unit sizes of adhesives, and sealant or caulking compounds (in units of product, less packaging, which do not weigh more than one pound and do not consist of more than 16 fluid ounces) shall comply with statewide VOC standards and other requirements, including prohibitions on use of certain toxic compounds, of *California Code of Regulations*, Title 17, commencing with Section 94507.

TABLE 5.504.4.1 - ADHESIVE VOC LIMIT[1,2]

Less Water and Less Exempt Compounds in Grams per Liter

ARCHITECTURAL APPLICATIONS	CURRENT VOC LIMIT
INDOOR CARPET ADHESIVES	50
CARPET PAD ADHESIVES	50
OUTDOOR CARPET ADHESIVES	150
WOOD FLOORING ADHESIVES	100
RUBBER FLOOR ADHESIVES	60
SUBFLOOR ADHESIVES	50
CERAMIC TILE ADHESIVES	65
VCT & ASPHALT TILE ADHESIVES	50
DRYWALL & PANEL ADHESIVES	50
COVE BASE ADHESIVES	50
MULTIPURPOSE CONSTRUCTION ADHESIVES	70
STRUCTURAL GLAZING ADHESIVES	100
SINGLE-PLY ROOF MEMBRANE ADHESIVES	250
OTHER ADHESIVES NOT SPECIFICALLY LISTED	50
SPECIALTY APPLICATIONS	
PVC WELDING	510
CPVC WELDING	490
ABS WELDING	325
PLASTIC CEMENT WELDING	250
ADHESIVE PRIMER FOR PLASTIC	550
CONTACT ADHESIVE	80
SPECIAL PURPOSE CONTACT ADHESIVE	250
STRUCTURAL WOOD MEMBER ADHESIVE	140
TOP & TRIM ADHESIVE	250
SUBSTRATE SPECIFIC APPLICATIONS	
METAL TO METAL	30
PLASTIC FOAMS	50
POROUS MATERIAL (EXCEPT WOOD)	50
WOOD	30
FIBERGLASS	80

1. IF AN ADHESIVE IS USED TO BOND DISSIMILAR SUBSTRATES TOGETHER, THE ADHESIVE WITH THE HIGHEST VOC CONTENT SHALL BE ALLOWED.

2. FOR ADDITIONAL INFORMATION REGARDING METHODS TO MEASURE THE VOC CONTENT SPECIFIED IN THIS TABLE, SEE SOUTH COAST AIR QUALITY MANAGEMENT DISTRICT RULE 1168, www.arb.ca.gov/DRDB/SC/CURHTML/R1168.PDF

TABLE 5.504.4.2 - SEALANT VOC LIMIT

Less Water and Less Exempt Compounds in Grams per Liter

SEALANTS	CURRENT VOC LIMIT
ARCHITECTURAL	250
MARINE DECK	760
NONMEMBRANE ROOF	300
ROADWAY	250
SINGLE-PLY ROOF MEMBRANE	450
OTHER	420
SEALANT PRIMERS	
ARCHITECTURAL	
NONPOROUS	250
POROUS	775
MODIFIED BITUMINOUS	500
MARINE DECK	760
OTHER	750

NOTE: FOR ADDITIONAL INFORMATION REGARDING METHODS TO MEASURE THE VOC CONTENT SPECIFIED IN THESE TABLES, SEE SOUTH COAST AIR QUALITY MANAGEMENT DISTRICT RULE 1168.

5.504.4.3 Paints and coatings. Architectural paints and coatings shall comply with VOC limits in Table 1 of the ARB Architectural Coatings Suggested Control Measure, as shown in Table 5.504.4.3, unless more stringent local limits apply. The VOC content limit for coatings that do not meet the definitions for the specialty coatings categories listed in Table 5.504.4.3 shall be determined by classifying the coating as a Flat, Nonflat or Nonflat-High Gloss coating, based on its gloss, as defined in Subsections 4.21, 4.36 and 4.37 of the 2007 California Air Resources Board Suggested Control Measure, and the corresponding Flat, Nonflat or Nonflat-High Gloss VOC limit in Table 5.504.4.3 shall apply.

5.504.4.3.1 Aerosol Paints and coatings. Aerosol paints and coatings shall meet the PWMIR Limits for ROC in Section 94522(a)(3) and other requirements, including prohibitions on use of certain toxic compounds and ozone depleting substances, in Sections 94522(c)(2) and (d)(2) of *California Code of Regulations*, Title 17, commencing with Section 94520; and in areas under the jurisdiction of the Bay Area Air Quality Management District additionally comply with the percent VOC by weight of product limits of Regulation 8 Rule 49.

TABLE 5.504.4.3 - CONT.

GRAMS OF VOC PER LITER OF COATING, LESS WATER & LESS EXEMPT COMPOUNDS

COATING CATEGORY	CURRENT VOC LIMIT
SPECIALTY COATINGS	
ALUMINUM ROOF COATINGS	400
BASEMENT SPECIALTY COATINGS	400
BITUMINOUS ROOF COATINGS	50
BITUMINOUS ROOF PRIMERS	350
BOND BREAKERS	350
CONCRETE CURING COMPOUNDS	350
CONCRETE/MASONRY SEALERS	100
DRIVEWAY SEALERS	50
DRY FOG COATINGS	150
FAUX FINISHING COATINGS	350
FIRE RESISTIVE COATINGS	350
FLOOR COATINGS	100
FORM-RELEASE COMPOUNDS	250
GRAPHIC ARTS COATINGS (SIGN PAINTS)	500
HIGH-TEMPERATURE COATINGS	420
INDUSTRIAL MAINTENANCE COATINGS	250
LOW SOLIDS COATINGS[1]	120
MAGNESITE CEMENT COATINGS	450
MASTIC TEXTURE COATINGS	100
METALLIC PIGMENTED COATINGS	500
MULTICOLOR COATINGS	250
PRETREATMENT WASH PRIMERS	420
PRIMERS, SEALERS, & UNDERCOATERS	100
REACTIVE PENETRATING SEALERS	350
RECYCLED COATINGS	250
ROOF COATINGS	50
RUST PREVENTATIVE COATINGS	250
SHELLACS:	
CLEAR	730
OPAQUE	550
SPECIALTY PRIMERS, SEALERS & UNDERCOATERS	100
STAINS	250
STONE CONSOLIDANTS	450
SWIMMING POOL COATINGS	340
TRAFFIC MARKING COATINGS	100
TUB & TILE REFINISH COATINGS	420
WATERPROOFING MEMBRANES	250
WOOD COATINGS	275
WOOD PRESERVATIVES	350
ZINC-RICH PRIMERS	340

1. GRAMS OF VOC PER LITER OF COATING, INCLUDING WATER & EXEMPT COMPOUNDS

2. THE SPECIFIED LIMITS REMAIN IN EFFECT UNLESS REVISED LIMITS ARE LISTED IN SUBSEQUENT COLUMNS IN THE TABLE.

3. VALUES IN THIS TABLE ARE DERIVED FROM THOSE SPECIFIED BY THE CALIFORNIA AIR RESOURCES BOARD, ARCHITECTURAL COATINGS SUGGESTED CONTROL MEASURE, FEB. 1, 2008. MORE INFORMATION IS AVAILABLE FROM THE AIR RESOURCES BOARD.

5.504.4.3.2 Verification. Verification of compliance with this section shall be provided at the request of the enforcing agency. Documentation may include, but is not limited to, the following:
1. Manufacturer's product specification
2. Field verification of on-site product containers

5.504.4.4 Carpet Systems.
All carpet installed in the building interior shall meet the requirements of the California Department of Public Health, "Standard Method for the Testing and Evaluation of Volatile Organic Chemical Emissions from Indoor Sources Using Environmental Chambers." Version 1.2, January 2017 (Emission testing method for California Specifications 01350).

See California Department of Public Health's website for certification programs and testing labs. https://www.cdph.ca.gov/Programs/CCDPHP/DEODC/EHLB/IAQ/Pages/VOC.aspx#material

5.504.4.4.1 Carpet cushion. All carpet cushion installed in the building interior shall meet the requirements of the California Department of Public Health,"Standard Method for the Testing and Evaluation of Volatile Organic Chemical Emissions from Indoor Sources Using Environmental Chambers,"Version 1.2, January 2017 (Emission testing method for California Specifications 01350).

See California Department of Public Health's website for certification programs and testing labs. https://www.cdph.ca.gov/Programs/CCDPHP/DEODC/EHLB/IAQ/Pages/VOC.aspx#material

5.504.4.4.2 Carpet adhesive. All carpet adhesive shall meet the requirements of Table 5.504.4.1.

5.504.4.5 Composite wood products. Hardwood plywood, particleboard and medium density fiberboard composite wood products used on the interior or exterior of the buildings shall meet the requirements for formaldehyde as specified in ARB's Air Toxics Control Measure (ATCM) for Composite Wood (17 CCR 93120 et seq.). Those materials not exempted under the ATCM must meet the specified emission limits, as shown in Table 5.504.4.5.

5.504.4.5.3 Documentation. Verification of compliance with this section shall be provided as requested by the enforcing agency. Documentation shall include at least one of the following:
1. Product certifications and specifications.
2. Chain of custody certifications.
3. Product labeled and invoiced as meeting the Composite Wood Products regulation (see CCR, Title 17, Section 93120, et seq.).
4. Exterior grade products marked as meeting the PS-1 or PS-2 standards of the Engineered Wood Association, the Australian AS/NZS 2269 or European 636 3S standards.
5. Other methods acceptable to the enforcing agency.

TABLE 5.504.4.5 - FORMALDEHYDE LIMITS[1]

MAXIMUM FORMALDEHYDE EMISSIONS IN PARTS PER MILLION

PRODUCT	CURRENT LIMIT
HARDWOOD PLYWOOD VENEER CORE	0.05
HARDWOOD PLYWOOD COMPOSITE CORE	0.05
PARTICLE BOARD	0.09
MEDIUM DENSITY FIBERBOARD	0.11
THIN MEDIUM DENSITY FIBERBOARD[2]	0.13

1. VALUES IN THIS TABLE ARE DERIVED FROM THOSE SPECIFIED BY THE CALIFORNIA AIR RESOURCES BOARD, AIR TOXICS CONTROL MEASURE FOR COMPOSITE WOOD AS TESTED IN ACCORDANCE WITH ASTM E 1333. FOR ADDITIONAL INFORMATION, SEE CALIFORNIA CODE OF REGULATIONS, TITLE 17, SECTIONS 93120 THROUGH 93120.12.

2. THIN MEDIUM DENSITY FIBERBOARD HAS A MAXIMUM THICKNESS OF 5/16 INCHES (8 MM).

5.504.4.6 Resilient flooring systems. Where resilient flooring is installed, at least 80 percent of floor area receiving resilient flooring shall meet the requirements of the California Department of Public Health,"Standard Method for the Testing and Evaluation of Volatile Organic Chemical Emissions from Indoor Sources Using Environmental Chambers," Version 1.2, January 2017 (Emission testing method for California Specifications 01350)

See California Department of Public Health's website for certification programs and testing labs. https://www.cdph.ca.gov/Programs/CCDPHP/DEODC/EHLB/IAQ/Pages/VOC.aspx#material

5.504.4.6.1 Verification of compliance. Documentation shall be provided verifying that resilient flooring materials meet the pollutant emission limits.

5.504.4.7 Thermal insulation
Comply with the requirements of the California Department of Public Health, "Standard Method of the Testing and Evaluation of Volatile Organic Chemical Emissions from Indoor Sources Using Environmental Chambers, "Version 1.2, January 1.2, January 2017 (Emission testing method for California Specification 01350).
See California Department of Public Health's website for certification programs and testing labs. https://www.cdph.ca.gov/Programs/CCDPHP/DEODC/EHLB/IAQ/Pages/VOC.aspx#material

5.504.4.7.1 Verification of compliance.
Documentation shall be provided verifying that thermal insulation materials meet the pollutant emission limits.

5.504.4.8 Acoustical ceiling and wall panels.
Comply with the requirements of the California Department of Public Health, "Standard Method for the Testing and Evaluation of Volatile Organic Chemical Emissions from Indoor Sources Using Environmental Chambers, " Version 1.2, January 2017 (Emission testing method for California Specification 01350).
See California Department of Public Health's website for certification programs and testing labs.

5.504.4.8.1 Verification of compliance. Documentation shall be provided verifying that acoustical finish materials meet the pollutant emission limits.

5.504.5.3 Filters. In mechanically ventilated buildings, provide regularly occupied areas of the building with air filtration media for outside and return air that provides at least a Minimum Efficiency Reporting Value (MERV) of 13. MERV 13 filters shall be installed prior to occupancy, and recommendations for maintenance with filters of the same value shall be included in the operation and maintenance manual.

Exceptions: Existing mechanical equipment.

5.504.5.3.1 Labeling. Installed filters shall be clearly labeled by the manufacturer indicating the MERV rating.

5.504.7 ENVIRONMENTAL TOBACCO SMOKE (ETS) CONTROL. Where outdoor areas are provided for smoking, prohibit smoking within 25 feet of building entries, outdoor air intakes and operable windows and within the building as already prohibited by other laws or regulations; or as enforced by ordinances, regulations or policies of any city, county, city and county, California Community College, campus of the California State University, or campus of the University of California, whichever are more stringent. When ordinances, regulations or policies are not in place, post signage to inform building occupants of the prohibitions.

SECTION 5.505 INDOOR MOISTURE CONTROL

5.505.1 INDOOR MOISTURE CONTROL. Buildings shall meet or exceed the provisions of California Building Code, CCR, Title 24, Part 2, Sections 1202 (Ventilation) and Chapter 14 (Exterior Walls). For additional measures, see Section 5.407.2 of this code.

SECTION 5.506 INDOOR AIR QUALITY

5.506.1 OUTSIDE AIR DELIVERY. For mechanically or naturally ventilated spaces in buildings, meet the minimum requirements of Section 120.1 (Requirements For Ventilation) of the *California Energy Code*, or the applicable local code, whichever is more stringent, and Division 1, Chapter 4 of CCR, Title 8.

5.506.2 CARBON DIOXIDE (CO_2) MONITORING. For buildings or additions equipped with demand control ventilation, CO_2 sensors and ventilation controls shall be specified and installed in accordance with the requirements of the California Energy Code, Section 120(c)(4).

5.506.3 Carbon dioxide (CO2) monitoring in classrooms.
(DSA-SS) Each public K-12 school classroom, as listed in Table 120.1-A of the *California Energy Code,* shall be equipped with a carbon dioxide monitor or sensor that meets the following requirements:
1. The monitor or sensor shall be permanently affixed in a tamper-proof manner in each classroom between 3 and 6 feet (914 mm and 1829 mm) above the floor and at least 5 feet (1524 mm) away from door and operable windows.
2. When the monitor or sensor is not integral to an Energy Management Control System (EMCS), the monitor or sensor shall display the carbon dioxide readings on the device. When the sensor is integral to an EMCS, the carbon dioxide readings shall be available to and regularly monitored by facility personnel.
3. A monitor shall provide notification though a visual indicator on the monitor when the carbon dioxide levels in the classroom have exceeded 1,100ppm. A sensor integral to an EMCS shall provide notification to facility personnel through a visual and/or audible indicator when the carbon dioxide levels in the classroom have exceeded 1,100ppm.
4. The monitor or sensor shall measure carbon dioxide levels at minimum 15- minute intervals and shall maintain a record of previous carbon dioxide measurements of not less than 30 days duration.
5. The monitor or sensor used to measure carbon dioxide levels shall have the capacity to measure carbon dioxide levels with a range of 400ppm to 2000ppm or greater.
6. The monitor or sensor shall be certified by the manufacturer to be accurate within 75ppm at 1,000ppm carbon dioxide concentration and shall be certified by the manufacturer to require calibration no more frequently than once every 5 years.

SECTION 5.507 ENVIRONMENTAL COMFORT

5.507.4 ACOUSTICAL CONTROL. Employ building assemblies and components with Sound Transmission Class (STC) values determined in accordance with ASTM E 90 and ASTM E 413, or Outdoor-Indoor Sound Transmission Class (OITC) determined in accordance with ASTM E 1332, using either the prescriptive or performance method in Section 5.507.4.1 or 5.507.4.2.

Exception: Buildings with few or no occupants or where occupants are not likely to be affected by exterior noise, as determined by the enforcement authority, such as factories, stadiums, storage, enclosed parking structures and utility buildings.

Exception: [DSA-SS] For public schools and community colleges, the requirements of this section and all subsections apply only to new construction.

5.507.4.1 Exterior noise transmission, prescriptive method. Wall and roof-ceiling assemblies exposed to the noise source making up the building or addition envelope or altered envelope shall meet a composite STC rating of at least 50 or a composite OITC rating of no less than 40, with exterior windows of a minimum STC of 40 or OITC of 30 in the following locations:

1. Within the 65 CNEL noise contour of an airport.

   Exceptions:

   1. L_{dn} or CNEL for military airports shall be determined by the facility Air Installation Compatible Land Use Zone (AICUZ) plan.
   2. L_{dn} or CNEL for other airports and heliports for which a land use plan has not been developed shall be determined by the local general plan noise element.

2. Within the 65 CNEL or L_{dn} noise contour of a freeway or expressway, railroad, industrial source or fixed-guideway source as determined by the Noise Element of the General Plan.

5.507.4.1.1. Noise exposure where noise contours are not readily available. Buildings exposed to a noise level of 65 dB L_{eq} - 1-hr during any hour of operation shall have building, addition or alteration exterior wall and roof-ceiling assemblies exposed to the noise source meeting a composite STC rating of at least 45 (or OITC 35), with exterior windows of a minimum STC of 40 (or OITC 30).

5.507.4.2 Performance Method. For buildings located as defined in Section 5.507.4.1 or 5.507.4.1.1, wall and roof-ceiling assemblies exposed to the noise source making up the building or addition envelope or altered envelope shall be constructed to provide an interior noise environment attributable to exterior sources that does not exceed an hourly equivalent noise level (Leq-1Hr) of 50 dBA in occupied areas during any hour of operation.

5.507.4.2.1 Site Features. Exterior features such as sound walls or earth berms may be utilized as appropriate to the building, addition or alteration project to mitigate sound migration to the interior.

5.507.4.2.2 Documentation of Compliance. An acoustical analysis documenting complying interior sound levels shall be prepared by personnel approved by the architect or engineer of record.

5.507.4.3 Interior sound transmission. Wall and floor-ceiling assemblies separating tenant spaces and tenant spaces and public places shall have an STC of at least 40.

Note: Examples of assemblies and their various STC ratings may be found at the California Office of Noise Control: www.toolbase.org/PDF/CaseStudies/stc_icc_ratings.pdf.

SECTION 5.508 OUTDOOR AIR QUALITY

5.508.1 Ozone depletion and greenhouse gas reductions. Installations of HVAC, refrigeration and fire suppression equipment shall comply with Sections 5.508.1.1 and 5.508.1.2.

5.508.1.1 Chlorofluorocarbons (CFCs). Install HVAC, refrigeration and fire suppression equipment that do not contain CFCs.

5.508.1.2 Halons. Install HVAC, refrigeration and fire suppression equipment that do not contain Halons.

5.508.2 Supermarket refrigerant leak reduction. New commercial refrigeration systems shall comply with the provisions of this section when installed in retail food stores 8,000 square feet or more conditioned area, and that utilize either refrigerated display cases, or walk-in coolers or freezers connected to remote compressor units or condensing units. The leak reduction measures apply to refrigeration systems containing high-global-warming potential (high-GWP) refrigerants with a GWP of 150 or greater. New refrigeration systems include both new facilities and the replacement of existing refrigeration systems in existing facilities.

Exception: Refrigeration systems containing low-global warming potential (low-GWP) refrigerant with a GWP value less than 150 are not subject to this section. Low-GWP refrigerants are nonozone-depleting refrigerants that include ammonia, carbon dioxide (CO_2), and potentially other refrigerants.

5.508.2.1 Refrigerant piping. Piping compliant with the California Mechanical Code shall be installed to be accessible for leak protection and repairs. Piping runs using threaded pipe, copper tubing with an outside diameter (OD) less than 1/4 inch, flared tubing connections and short radius elbows shall not be used in refrigerant systems except as noted below.

5.508.2.1.1 Threaded pipe. Threaded connections are permitted at the compressor rack.

5.508.2.1.2 Copper pipe. Copper tubing with an OD less than 1/4 inch may be used in systems with a refrigerant charge of 5 pounds or less.

5.508.2.1.2.1 Anchorage. One-fouth-inch OD tubing shall be securely clamped to a rigid base to keep vibration levels below 8 mils.

5.508.2.1.3 Flared tubing connections. Double-flared tubing connections may be used for pressure controls, valve pilot lines and oil.

Exception: Single-flared tubing connections may be used with a multiring seal coated with industrial sealant suitable for use with refrigerants and tightened in accordance with manufacturer's recommendations.

5.508.2.1.4 Elbows. Short radius elbows are only permitted where space limitations prohibit use of long radius elbows.

5.508.2.2 Valves. Valves Valves and fittings shall comply with the *California Mechanical Code* and as follows.

5.508.2.2.1 Pressure relief valves. For vessels containing high-GWP refrigerant, a rupture disc shall be installed between the outlet of the vessel and the inlet of the pressure relief valve.

5.508.2.2.1.1 Pressure detection. A pressure gauge, pressure transducer or other device shall be installed in the space between the rupture disc and the relief valve inlet to indicate a disc rupture or discharge of the relief valve.

5.508.2.2.2 Access valves. Only Schrader access valves with a brass or steel body are permitted for use.

5.508.2.2.2.1 Valve caps. For systems with a refrigerant charge of 5 pounds or more, valve caps shall be brass or steel and not plastic.

5.508.2.2.2.2 Seal caps. If designed for it, the cap shall have a neoprene O-ring in place.

5.508.2.2.2.2.1 Chain tethers. Chain tethers to fit ovr the stem are required for valves designed to have seal caps.

Exception: Valves with seal caps that are not removed from the valve during stem operation.

5.508.2.3 Refrigerated service cases. Refrigerated service cases holding food products containing vinegar and salt shall have evaporator coils of corrosion-resistant material, such as stainless steel; or be coated to prevent corrosion from these substances.

5.508.2.3.1 Coil coating. Consideration shall be given to the heat transfer efficiency of coil coating to maximize energy efficiency.

5.508.2.4 Refrigerant receivers. Refrigerant receivers with capacities greater than 200 pounds shall be fitted with a device tha indicates the level of refrigerant in the receiver.

5.508.2.5 Pressure testing. The system shall be pressure tested during installation prior to evacuation and charging.

5.508.2.5.1 Minimum pressure. The system shall be charged with regulated dry nitrogen and appropriate tracer gas to bring system pressure up to 300 psig minimum.

5.508.2.5.2 Leaks. Check the system for leaks, repair any leaks, and retest for pressure using the same gauge.

5.508.2.5.3 Allowable pressure change. The system shall stand, unaltered, for 24 hours with no more than a +/- one pound pressure change from 300 psig, measured with the same gauge.

5.508.2.6 Evacuation. The system shall be evacuated after pressure testing and prior to charging.

5.508.2.6.1 First vacuum. Pull a system vacuum down to at least 1000 microns (+/- 50 microns), and hold for 30 minutes.

5.508.2.6.2 Second vacuum. Pull a second system vacuum to a minimum of 500 microns and hold for 30 minutes.

5.508.2.6.3 Third vacuum. Pull a third vacuum down to a minimum of 300 microns, and hold for 24 hours with a maximum drift of 100 microns over a 24-hour period.

CHAPTER 7
INSTALLER & SPECIAL INSPECTOR QUALIFICATIONS

702 QUALIFICATIONS

702.1 INSTALLER TRAINING. HVAC system installers shall be trained and certified in the proper installation of HVAC systems including ducts and equipment by a nationally or regionally recognized training or certification program. Uncertified persons may perform HVAC installations when under the direct supervision and responsibility of a person trained and certified to install HVAC systems or contractor licensed to install HVAC systems. Examples of acceptable HVAC training and certification programs include but are not limited to the following:

1. State certified apprenticeship programs.
2. Public utility training programs.
3. Training programs sponsored by trade, labor or statewide energy consulting or verification organizations.
4. Programs sponsored by manufacturing organizations.
5. Other programs acceptable to the enforcing agency.

702.2 SPECIAL INSPECTION [HCD]. When required by the enforcing agency, the owner or the responsible entity acting as the owner's agent shall employ one or more special inspectors to provide inspection or other duties necessary to substantiate compliance with this code. Special inspectors shall demonstrate competence to the satisfaction of the enforcing agency for the particular type of inspection or task to be performed. In addition to other certifications or qualifications acceptable to the enforcing agency, the following certifications or education may be considered by the enforcing agency when evaluating the qualifications of a special inspector:

1. Certification by a national or regional green building program or standard publisher.
2. Certification by a statewide energy consulting or verification organization, such as HERS raters, building performance contractors, and home energy auditors.
3. Successful completion of a third party apprentice training program in the appropriate trade.
4. Other programs acceptable to the enforcing agency.

Notes:

1. Special inspectors shall be independent entities with no financial interest in the materials or the project they are inspecting for compliance with this code.
2. HERS raters are special inspectors certified by the California Energy Commission (CEC) to rate homes in California according to the Home Energy Rating System (HERS).

[BSC-CG] When required by the enforcing agency, the owner or the responsible entity acting as the owner's agent shall employ one or more special inspectors to provide inspection or other duties necessary to substantiate compliance with this code. Special inspectors shall demonstrate competence to the satisfaction of the enforcing agency for the particular type of inspection or task to be performed. In addition, the special inspector shall have a certification from a recognized state, national or international association, as determined by the local agency. The area of certification shall be closely related to the primary job function, as determined by the local agency.

Note: Special inspectors shall be independent entities with no financial interest in the materials or the project they are inspecting for compliance with this code.

703 VERIFICATIONS

703.1 DOCUMENTATION. Documentation used to show compliance with this code shall include but is not limited to, construction documents, plans, specifications, builder or installer certification, inspection reports, or other methods acceptable to the enforcing agency which demonstrate substantial conformance. When specific documentation or special inspection is necessary to verify compliance, that method of compliance will be specified in the appropriate section or identified applicable checklist.

DISCLAIMER: THIS DOCUMENT IS PROVIDED AND INTENDED TO BE USED AS A MEANS TO INDICATE AREAS OF COMPLIANCE WITH THE CALIFORNIA GREEN BUILDING STANDARDS (CALGREEN) CODE. DUE TO THE VARIABLES BETWEEN BUILDING DEPARTMENT JURISDICTIONS, THIS CHECKLIST IS TO BE USED ON AN INDIVIDUAL PROJECT BASIS AND MAY BE MODIFIED BY THE END USER TO MEET THOSE INDIVIDUAL NEEDS. THE END USER ASSUMES ALL RESPONSIBILITY ASSOCIATED WITH THE USE OF THIS DOCUMENT, INCLUDING VERIFICATION WITH THE FULL CODE.

NOAA group architects
4990 N Harbor Drive, Ste 201
San Diego, CA 92106
tel: 619-297-8066
web: www.noaainc.com

LICENSED ARCHITECT DANUBE TALANT No. C38946 REN 11/30/2023 STATE OF CALIFORNIA

DO NOT SCALE DRAWINGS. ANY DISCREPANCIES TO BE REVIEWED WITH THE ARCHITECT.

SAN DIEGO FAMILY DERMATOLOGY
222 W. MADISON AVENUE
EL CAJON, CA 92020

REVISION SCHEDULE

Nº	DATE	ISSUE
1	07/06/2023	1ST CITY REVIEW
2	08/22/2023	2ND CITY REVIEW

Project No: BP-2023-0267
Project Start Date: Issue Date
Drawn: Designer
Checked: Checker
Revision:
Sheet Name: NON-RES CALGREEN
Scale: 12" = 1'-0"
Sheet No: A-023

8/25/2023 10:51:21 AM

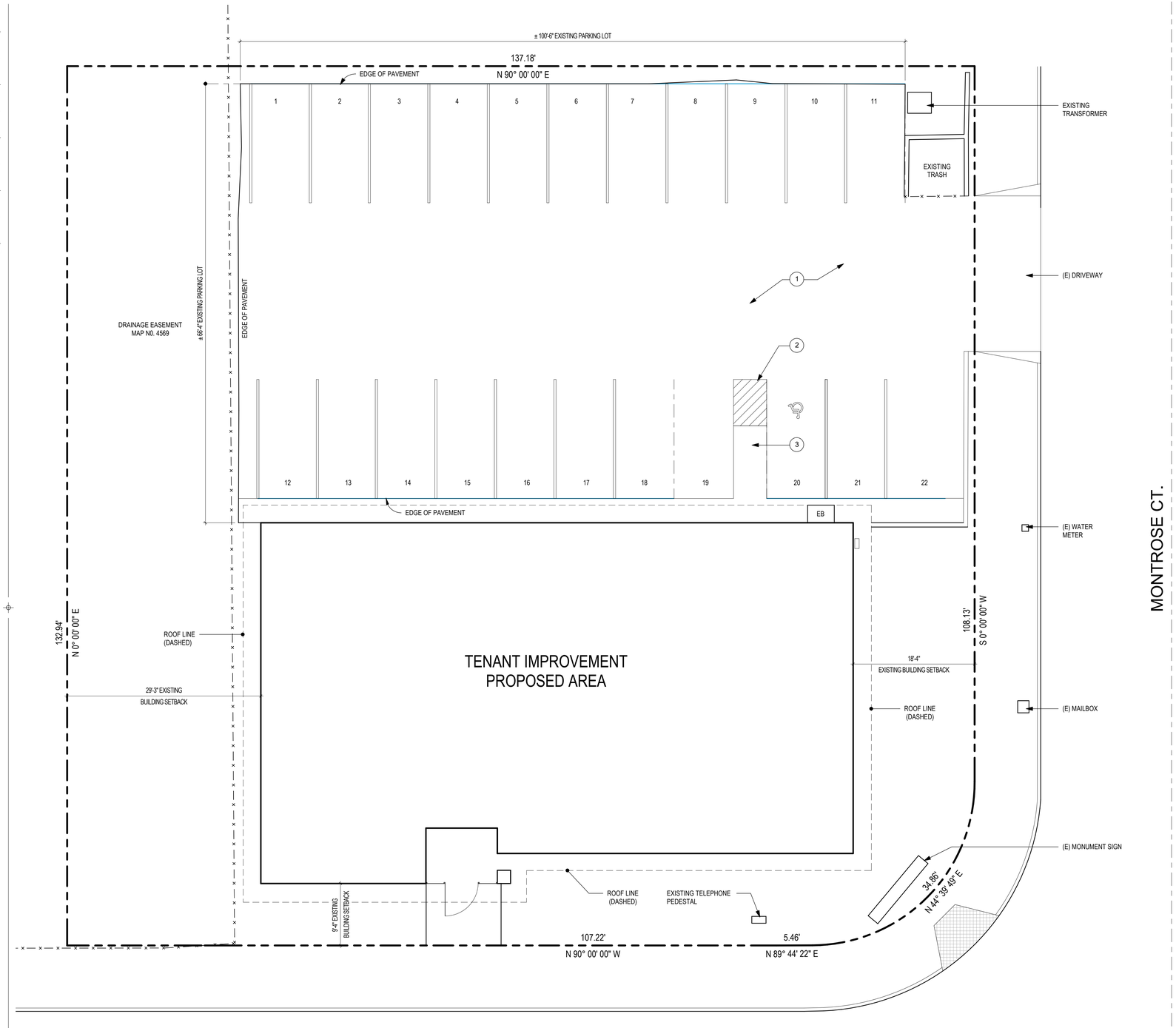

2 **EXISTING/ DEMO SITE PLAN**
Ref: A-201 / Scale: 1/8" = 1'-0"

SITE PLAN DEMO KEYNOTES

NOTE: MINIMUM 65% OF NON-HAZARDOUS CONSTRUCTION AND DEMOLTION MATERIALS SHALL BE RECYCLED.

1. GRIND/REMOVE AC PAVING AS REQUIRED FOR NEW SULRRY COAT. SEE SITE PLAN NOTES FOR REWORK/RESTRIPING.
2. REMOVE EXISTING STRIPING AS REQUIRED FOR NEW AC OVERLAY.
3. REMOVE CONCRETE PAVING AT EXISTING (NON-COMPLIANT) ADA SPACE.

GENERAL NOTES

ADDRESS IDENTIFCATION SHALL BE PROVIDED FOR ALL NEW AND EXISTING BUILDINGS IN A LOCATION THAT IS PAINLY VISIBLE AND LEGIBLE FROM THE STREET OR ROAD FRONTING THE PROPERTY. WHERE ACCESS IS BY WAY OF A PRIVATE ROAD AND THE BUILDING ADDRESS CANNOT BE VIEWED FROM THE PUBLIC WAY, AN APPROVED SIGN OR MEANS SHALL BE USED TO IDENTIFY THE STRUCTURE.

PREMISES IDENTIFCATION SHALL CONFROM TO CBC SECTION 501.2

I AM THE DESIGNER IN RESPONSIBLE CHARGE OF THIS TENANT IMPROVMENT PROJECT. I HAVE INSPECTED THE SITE/PREMISES AND DETERMINED THAT EXISTING CONDITIONS ARE IN FULL COMPLIANCE WITH CURRENT SITE ACCESSIBILITY REQUIREMENTS TO THE EXTENT REQUIRED BY LAW.

PRINTED NAME: DAN TALANT SIGNATURE:
DATE:

I AM THE DESIGNER IN RESPONSIBLE CHARGE OF THIS TENANT IMPROVMENT PROJECT. I HAVE INSPECTED THE TOILET AND BATHING FACILITIES FOR MEN AND WOMN AND DETERMINED THAT EXISTING CONDITIONS ARE IN FULL COMPLIANCE WITH CURRENT ACCESSIBILITY REQUIREMENTS TO THE EXTEND REQUIRED BY LAW.

PRINTED NAME: DAN TALANT SIGNATURE:
DATE:

IF THE CITY BUILDING INSPECTOR DETERMINES NON-COMPLIANCE WITH ANY ACCESSIBILITY PROVISION, A COMPLETE AND DETAILED REVISED PLANS CLEARLY SHOWING ALL EXISTING NON0COMPLYING CONDITIONS AND THE PROPOSED MODIFICATIONS TO MEET CURRENT ACCESSIBILITY REQUIREMENTS (INCLUDING SITE PLAN, FLOOR PLANS DETAILS ETC.) WILL BE SUBMITTED TO THE DEPARTMENT FOR REVIEW AND APPROVAL.

NDAA group architects
4990 N Harbor Drive, Ste 201
San Diego, CA 92106

tel: 619-297-8066
web: www.noaainc.com

LICENSED ARCHITECT DANUBE TALANT No. C38946 REN 11/30/2023 STATE OF CALIFORNIA

DO NOT SCALE DRAWINGS.
ANY DISCREPANCIES TO BE REVIEWED WITH THE ARCHITECT.

SAN DIEGO FAMILY DERMATOLOGY

222 W. MADISON AVENUE
EL CAJON, CA 92020

REVISION SCHEDULE		
Nº	DATE	ISSUE
1	01/06/2023	1ST CITY REVIEW
2	08/22/2023	2ND CITY REVIEW

Project No: BP-2023-0267
Project Start Date: Issue Date
Drawn: Designer
Checked: Checker
Revision:
Sheet Name:

EXISTING/DEMO SITE PLAN

Scale: As indicated
Sheet No:

A-101

North: TRUE PROJECT

8/25/2023 10:51:23 AM

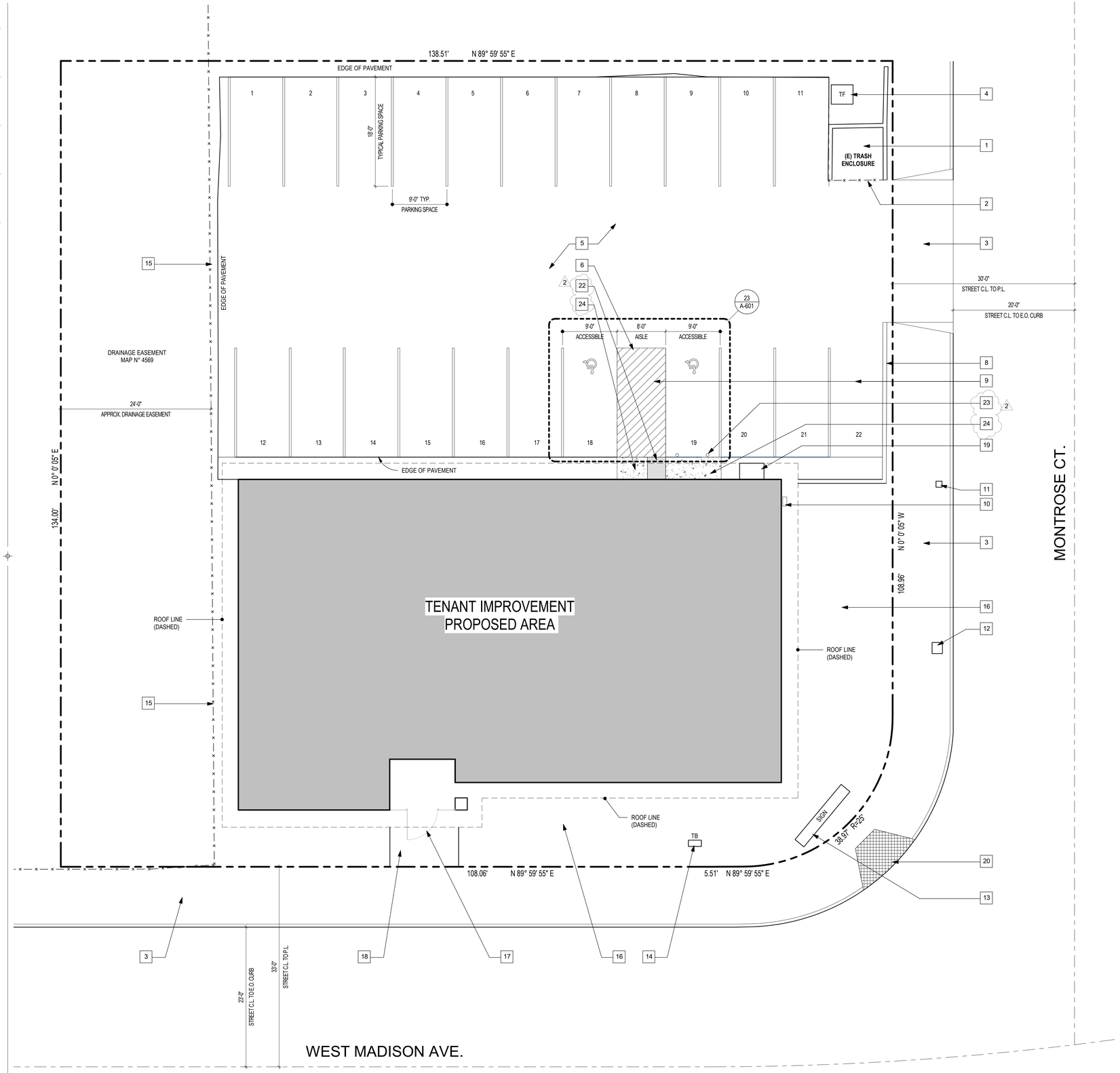

1 **SITE PLAN**
Ref: A-201 / Scale: 1/8" = 1'-0"

SITE PLAN PROPOSED KEYNOTES

P/I = PROVIDE & INSTALL

1. EXISTING BRICK TRASH ENCLOSURE TO REMAIN.
2. EXISTING TRASH ENCLOSURE GATES AND ROOF TO REMAIN. REPLACE DECORATIVE METAL SLATS.
3. EXISTING SIDEWALKS AND CURB CUT TO REMAIN.
4. EXISTING TRANSFORMER TO REMAIN.
5. SLURRY COAT AND RESTRIPE PARKING LOT IN ITS ENTIRETY. PROVIDE FILLER AT CRACKS, REMOVE AND REPLACE ANY UPHEAVED OR SUBSIDED AC PAVING AS REQUIRED FOR DURABLE PAVEMENT FINISH.
6. NEW AC PAVING OVER AGGREGATE BASE TO MATCH EXISTING PAVEMENT SECTION AT REMOVED CONCRETE AREA. PRESUMED TO BE 4" AC OVER 4" BASE).
7. NEW DISABLED PARKING SIGNAGE PER DETAIL 23/A-601.
8. EXISTING SITE ACCESSIBILITY SIGNAGE TO REMAIN.
9. RESTRIPE EXISTING PARKING AS SHOWN.
10. EXISTING GAS METER TO REMAIN.
11. EXISTING WATER METER. SEE PLUMBING DRAWINGS FOR USIZE REQUIREMENTS.
12. EXISTING USPS (PUBLIC) MAILBOX TO REMAIN.
13. EXISTING BRICK MONUMENT SIGN TO REMIAN. REWORK/REPAINT GREEN COLOR INSERT. COLOR TO BE PROVIDED BY OWNER/ARCHITECT. PROVIDE NEW PLANT-ON BRONZE LETTERS (SAME FONT AS EXISTING) WITH TEXT "SAN DIEGO FAMILY DERMATOLOGY" AND "222 W. MADISON".
14. EXISITNG TELEPHONE PEDESTAL TO REMAIN.
15. EXISTING 6' TALL CHAIN LINK FENCE TO REMSIN. GV TO REPAIR ANY DAMAGED SECTIONS.
16. EXSITING LANDSCAPING TO REMAIN. OWNER TO CONTRACT DIRECTLY WITH LANDSCAPE SUBCONTRACTOR TO REOWRK IRRIGATION AND PLANTING.
17. EXISTING METAL GATES AT UNUSED ENTRY TO REMAIN. PRIME/PAINT.
18. EXISTING PCC SLAB TO REMAIN.
19. EXISTING SWITCHGEAR TO REMAIN.
20. EXISTING CURB CUT TO REMAIN.
21. EXISTING MOE STRIP TO REMAIN.
22. NEW TRUNCATED DOMES.
23. NEW BOLLARDS.
24. NEW CONCRETE

STORMWATER INSPECTOR NOTE

STORMWATER INSPECTOR WILL BE CONTACTED AFTER REMOVAL/ GRINDING OF ASPHALT AND PRIOR TO SLURRY/OVERLAY. IF 5000 SQFT OF ASPHALT OR MORE ARE REMOVED TO THE BASE LAYER AND OR NATIVE SOIL ADDITIONAL STORMWATER CONDITIONS WILL BE REQUIRED AND THE PROJECT WOULD BECOME A PRIORITY DEVELOPMENT PROJECT. PLEASE SCHEDULE AN INSPECTION THROUGH PACO. IN ADDITION YOU MAY CONTACT CHAD LOU: (619) 441-6215 OR THE PUBLIC WORKS DEPARTMENT: (619) 441-1653 PRIOR TO OVERLAY OR SLURRY SEAL.

ENCROACHMENT PERMIT NOTE

AN ENCROACHMENT PERMIT (EP) IS REQUIRED PRIOR TO ANY WORK IN THE PUBLIC RIGHT-OF-WAY. THE EP WILL BE ISSUED BY ENGINEERING DIVISION, PROJECT ASSISTANCE CENTER. TO APPLY FOR AN EP YOU MUST REGISTER FOR AN ACCOUNT THROUGH OUR ONLINE PORTAL, PACO AND PROVIDE THE FOLLOWING: AN ENGINEERED SCALED DRAWING OF ALL WORK IN THE ROW. A TRAFFIC CONTROL PLAN (WITH APPLICABLE REVIEW FEE) INSURANCE CERTIFICATE THAT COMPLIES WITH CITY COUNCIL POLICY D-3 ($2,000,000 GENERAL LIABILITY) CITY LISTED AS 'ADDITIONAL INSURED' ON SEPARATE ENDORSEMENT WITH SPECIAL CITY REQUIRED LANGUAGE 10-DAY NOTICE OF CANCELLATION ON SEPARATE ENDORSEMENT WORKERS COMPENSATION WAIVER OF SUBROGATION ENDORSEMENT BUSINESS LICENSE PROOF CONTRACTOR'S LICENSE PROOF (WORK IN THE STREET REQUIRES AN A-LICENSED CONTRACTOR)."

CONSTRUCTION STORMWATER BMP NOTES

1. ALL APPLICABLE TEMPORARY CONSTRUCTION AND NON-STORMWATER DISCHARGE BMPS SHALL BE IMPLEMENTED IN ACCORDANCE WITH THE CITY OF EL CAJON MINIMUM BMP REQUIREMENTS INCLUDED IN THE EL CAJON MUNICIPAL CODE 13.10 AND THE CITY OF EL CAJON JURISDICTIONAL RUNOFF MANAGEMENT PROGRAM (JRMP).
2. THE OWNER/OWNER'S CONTRACTOR(S) ARE RESPONSIBLE FOR POLLUTION PREVENTION PRACTICES TO PREVENT THE DISCHARGE OF SEDIMENT AND POLLUTANTS TO THE PUBLIC STORM DRAIN SYSTEM.
3. THE OWNER/OWNER'S CONTRACTOR(S) ARE RESPONSIBLE FOR THE PREVENTION OF EROSION CAUSED BY GRADING, CLEARING OF VEGETATION, DEMOLITION OR CONSTRUCTION.
4. ALL STORMWATER BMPS SHALL BE MAINTAINED FOR THE DURATION OF THE PROJECT.
5. ALL APPLICABLE TEMPORARY CONSTRUCTION EROSION AND SEDIMENT CONTROL BMPS SHALL BE IMPLEMENTED FOR ALL PORTIONS OF THE PROJECT AREA WHERE APPLICABLE. ALL ONSITE DRAINAGE PATHWAYS THAT CONVEY CONCENTRATED FLOWS SHALL BE STABILIZED TO PREVENT EROSION.
6. RUN-ON FROM AREAS OUTSIDE THE PROJECT AREA SHALL BE DIVERTED AROUND WORK AREAS TO THE EXTENT FEASIBLE. RUN-ON THAT CANNOT BE DIVERTED SHALL BE MANAGED USING APPROPRIATE EROSION AND SEDIMENT CONTROL BMPS.
7. GRADED AREAS AROUND THE PROJECT PERIMETER WILL DRAIN AWAY FROM THE FACE OF SLOPES AT THE END OF EACH WORKING DAY.
8. PROVIDE EFFECTIVE SEDIMENT PERIMETER CONTROL AROUND PROJECT AREA TO HELP PREVENT TRANSPORT OF SOIL AND SEDIMENT OFFSITE BY USING FIBER ROLLS, GRAVEL BAGS, OR OTHER EQUALLY EFFECTIVE BMPS.
9. ANY SEDIMENT TRACKED ONTO OFFSITE PAVED AREAS SHALL BE REMOVED VIA SWEEPING AT LEAST DAILY. ALL BMPS SHALL BE INSTALLED AND MAINTAINED IN ACCORDANCE WITH THE APPLICABLE FACT SHEETS (CASQA, COUNTY OF SAN DIEGO, CITY OF EL CAJON).
10. SOLID WASTE AND OTHER CONSTRUCTION WASTES SHALL BE PLACED IN A CONTAINER DAILY LOCATED IN A DESIGNATED AREA AND SHALL BE DISPOSED OF IN ACCORDANCE WITH APPLICABLE REQUIREMENTS.
11. CONSTRUCTION MATERIALS SHALL BE STORED IN A MANNER TO HELP AVOID BEING TRANSPORTED IN STORMWATER RUNOFF DISCHARGES. CONCRETE WASTE SHALL NOT BE WASHED OUT ONTO THE GROUND SURFACE. CONCRETE WASHOUT SHALL BE DISPOSED PROPERLY AND PLACED IN A WASHOUT AREA DESIGNED IN ACCORDANCE WITH FACTSHEETS (CASQA, COUNTY OF SAN DIEGO, CITY OF EL CAJON).
12. EROSION CONTROL MEASURES WILL BE IMPLEMENTED STARTING THE FIRST DAY OF CLEARING, GRADING OR SOIL DISTURBANCE OR CONSTRUCTION. THESE CONTROLS WILL REMAIN IN EFFECT UNTIL ALL RELEVANT OPERATIONS HAVE BEEN COMPLETED AND DISTURBED SOIL HAVE EITHER: ESTABLISHED VEGETATION; OR OTHER PERMANENT EROSION CONTROL AT 70% COMPLETION).
13. STOCKPILES AND OTHER SOURCES OF POLLUTANTS SHALL BE COVERED WHEN THE CHANCE OF RAIN, WITHIN THE NEXT 48-HOURS WITH, IS AT LEAST 50% PRECIPITATION.
14. ALL GRAVEL BAGS SHALL HAVE ¾ INCH MINIMUM AGGREGATE (NO SANDBAGS OR BURLAP TYPE BAGS NALLOWED).
15. IN CASE OF EMERGENCY CONTACT NAME: JOSEPH HOLASEK PHONE: (619)-507-1001

NDAA group architects
4990 N Harbor Drive, Ste 201
San Diego, CA 92106
tel: 619-297-8066
web: www.noaainc.com

LICENSED ARCHITECT DANUBE TALLY No. C38946 REN 11/30/2023 STATE OF CALIFORNIA

DO NOT SCALE DRAWINGS.
ANY DISCREPANCIES TO BE REVIEWED WITH THE ARCHITECT.

SAN DIEGO FAMILY DERMATOLOGY
222 W. MADISON AVENUE
EL CAJON, CA 92020

REVISION SCHEDULE		
Nº	DATE	ISSUE
1	07/06/2023	1ST CITY REVIEW
2	08/22/2023	2ND CITY REVIEW

Project No:	BP-2023-0267
Project Start Date:	Issue Date
Drawn:	Designer
Checked:	Checker
Revision:	2
Sheet Name:	

PROPOSED SITE PLAN

North: TRUE N PROJECT

Scale:	As indicated
Sheet No:	

A-102

8/25/2023 10:51:25 AM

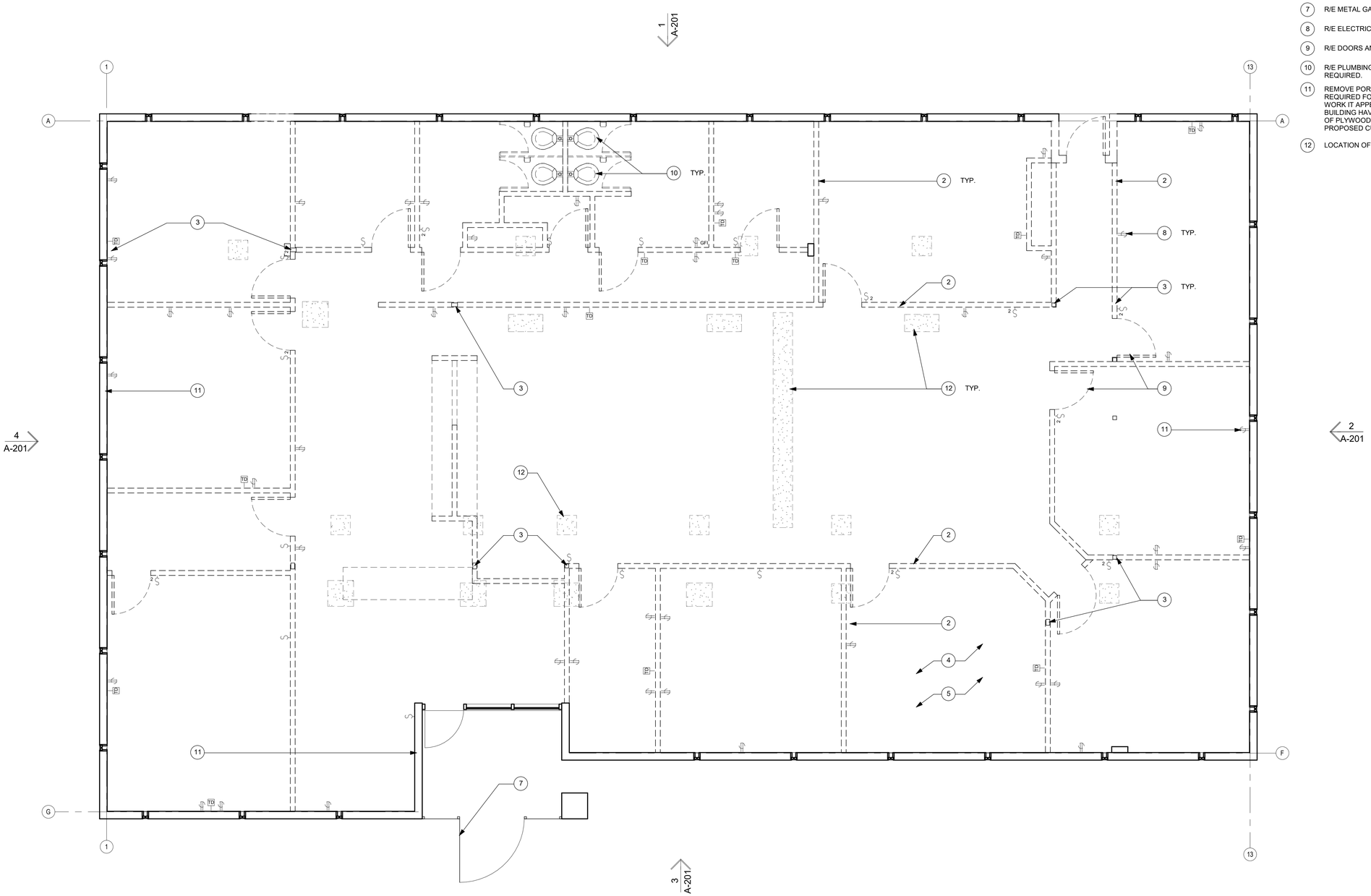

1 **EXISTING/ DEMO FLOOR PLAN**
Ref: A-201 / Scale: 1/4" = 1'-0"

FLOOR PLAN DEMO KEYNOTES

R/E = REMOVE EXISTING

1. R/E NON-BEARING WALL CONSTRUCTION IN ITS ENTIRETY.
2. R/E BEARING WALLS WHERE INIDICATED. NOTE: GC TO PROVIDE TEMPORARY SHORING AS REQUIRED TO SUPPORT ROOF STRUCTURE AT REMOVED BEARING WALLS.
3. COLUMNS TO BE REMOVED ONLY AFTER INSTALLATION OF SHORING. GC TO CALL ARCHITECT IMMEDIATELY IF ANY COLUMNS WHICH ARE NOT SHOWN ON PLANS ARE IDENTIFIED.
4. R/E CONCRETE SLAB ON GRADE AND SUB-BASE AS REQUIRED, AT NEW PLUMBING TRENCHES. GC AND PLUMBING SUB TO IDENTIFY NEW PLUMBING TRENCH LOCATIONS.
5. R/E CONCRETE AND SUB-GRADE AS REQUIRED AT LOCATIONS OF NEW FOOTINGS AND GRADE BEAMS. SEE SHEET S-1 FOR LOCATIONS.
6. R/E BRICK AND WOOD FRAMED WALL AT LOCATION OF NEW ENTRY AND NEW ENTRY DOOR. R/E CONCRETE SLAB AS REQUIRED FOR NEW INFILL CONSTRUCTION.
7. R/E METAL GATE.
8. R/E ELECTRICAL OUTLETS, DATA PORTS, ETC., AS REQUIRED FOR NEW T.I.
9. R/E DOORS AND FRAMES IN THEIR ENTIRETY.
10. R/E PLUMBING FIXTURES IN THEIR ENTIRETY. CAP/REMOVE PLUMBING AS REQUIRED.
11. REMOVE PORTION OF EXISTING DRYWALL ON EXTERIOR WALLS, AS REQUIRED FOR NEW ELECTRICAL/PLUMBING, ETC. NOTE: ON INITIAL FIELD WORK IT APPEARS THAT ONLY THE EAST AND WEST END WALLS OF THE BUILDING HAVE SHEAR WALLS. GC TO NOTIFY ARCHITECT OF THE LOCATION OF PLYWOOD SHEAR WALLS IDENTIFIED. GC TO COORDINATE ANY PROPOSED CUTS IN SHEAR WALLS WITH ARCHITECT PRIOR TO CUTTING.
12. LOCATION OF NEW FOOTINGS, PER STRUCTURAL PLANS. SEE SHEET S-1

NDAA group architects
4990 N Harbor Drive, Ste 201
San Diego, CA 92106

tel: 619-297-8066
web: www.noaainc.com

LICENSED ARCHITECT
DANUBE TALANT
No. C38946
REN 11/30/2023
STATE OF CALIFORNIA

DO NOT SCALE DRAWINGS.
ANY DISCREPANCIES TO BE REVIEWED WITH THE ARCHITECT.

SAN DIEGO FAMILY DERMATOLOGY
222 W. MADISON AVENUE
EL CAJON, CA 92020

REVISION SCHEDULE

Nº	DATE	ISSUE
1	07/06/2023	1ST CITY REVIEW
2	08/22/2023	2ND CITY REVIEW

Project No: BP-2023-0267
Project Start Date: Issue Date
Drawn: Designer
Checked: Checker
Revision:
Sheet Name:

EXISTING/DEMO FLOOR PLAN

Scale: 1/4" = 1'-0"
Sheet No:

North: TRUE N PROJECT

A-111

8/25/2023 10:51:26 AM

OCCUPANT LOAD TABLE

ROOM Nº	ROOM NAME	OCCUPANCY	OCC. FACTOR	AREA	OCC. LOAD
101	BREAK ROOM	BREAK ROOM	15	51 SF	4
102	TTB	ACCESSORY	300	12 SF	1
105	SUPPLY CLOSET	ACCESSORY	300	49 SF	1
106	ADMIN	OPEN OFFICE	150	122 SF	1
108	WAITING ROOM	WAITING ROOM	15	128 SF	9
109	ADMIN	OPEN OFFICE	150	158 SF	2
110	RECEPTION	BUSINESS	150	130 SF	1
111	PHOTO	ACCESSORY	300	38 SF	1
112	GEN DERM #9	BUSINESS	150	66 SF	1
114	HISTOTECH	BUSINESS	150	48 SF	1
115	GEN DERM #8	BUSINESS	150	69 SF	1
116	GEN DERM #7	BUSINESS	150	70 SF	1
117	GEN DERM #6	BUSINESS	150	70 SF	1
118	GEN DERM #1	BUSINESS	150	84 SF	1
119	GEN DERM #2	BUSINESS	150	84 SF	1
120	GEN DERM #3	BUSINESS	150	86 SF	1
121	GEN DERM #4	BUSINESS	150	96 SF	1
122	DR. OFFICES	OPEN OFFICE	150	232 SF	2
123	MANAGERS	OPEN OFFICE	150	157 SF	2
124	MOHS WAITING	WAITING ROOM	15	49 SF	4
125	GEN DERM #5 (SURGERY)	BUSINESS	150	125 SF	1
126	MOHS #1	BUSINESS	150	123 SF	1
127	MOHS #2	BUSINESS	150	122 SF	1
128	MOHS #3	BUSINESS	150	123 SF	1
129	MOHS #4	BUSINESS	150	125 SF	1
131	NURSES STATION	BUSINESS	150	83 SF	1
132	JANITOR	ACCESSORY	300	14 SF	1
FIRST FLOOR TOTAL OCCUPANCY					44

PLUMBING FIXTURE COUNT PER OCC.

CALCULATIONS BASED ON B OCCUPANY, PER CPC TABLE 422.1

MEN (22)
WATER CLOSET
REQUIRED: 1
PROVIDED: 1

URINAL
REQUIRED: 1
PROVIDED: 1

LAVATORY
REQUIRED: 1
PROVIDED: 2

DRINKING FOUNTAINS
REQUIRED: 1
PROVIDED: 1

SERVICE SINK
REQUIRED: 1
PROVIDED: 1 (CLINIC SUPPLIES)

WOMEN (22)
WATER CLOSET
REQUIRED: 2
PROVIDED: 2

URINAL
N/A

LAVATORY
REQUIRED: 1
PROVIDED: 1

ADDITIONAL SINK
MOHS ROOM
PROVIDED: 4

GENERAL DERMATOLOGY
PROVIDED: 1

HISTOTECH
PROVIDED: 1

BREAK ROOM
PROVIDED: 1

JANITOR (MOP SINK)
PROVIDED: 1

TOTAL = 44 OCCUPANTS

WALL SCHEDULE

1. EXISTING EXTERIOR WALL ASSEMBLY TO REMAIN. GC TO CONFIRM WHETHER NEW 5/8" GYP. BD. FINISH AT INTERIOR WALLS (M.R. AT WET WALLS) AND NEW BATT INSULATION NEED TO BE PROVIDED.
2. NEW 2X4 WOOD STUDS @ 16" O.C. W/ BATT INSULATION PER T24, AND 5/8" GYP. BD. FINISH EACH SIDE.
3. NEW 2X4 WOOD STUDS @ 16" O.C. WITH 5/8" MOISTURE RESISTANT GYP. BD. FINISH AT WET SIDE.
4. NEW PONY WALL UNDER THE COUNTER WITH 2X4 WOOD STUDS @ 16" O.C., AND 5/8" GYP. BD. FINISH EACH SIDE. PROVIDE 2X2 STEEL REINFORCEMENT POST @ 48" O.C. MAX. & WITHIN 12" FROM END OF WALLS. SEE 20/A-601 FOR STL POST INFORMATION. SEE INTERIOR ELEVATIONS FOR T.O. FRAMING HEIGHTS.
5. NEW 2X6 WOOD STUDS @ 16" O.C. W/ BATT INSULATION PER T24, AND 5/8" GYP. BD. FINISH EACH SIDE.

WALL LEGEND

PROVIDE FULL BATT INSULATION AT ALL INTERIOR WALLS.

EXISTING WALL TO REMAIN

EXISTING WALL TO BE DEMOLISHED, REFER TO SHEET A-111

NEW WALL, PER WALL SCHEDULE

NOTE:
G.C. TO INSPECT ALL EXISTING EXTERIOR WALLS AND ROOF/CLG'S TO CONFIRM IF WALLS/ROOF ARE PROVIDE WITH BATT INSULATION. ANY WALLS/PORTION OF ROOF FOUND NOT TO HAVE INSULATION, G.C. TO PROVIDE ADD - ALT FOR OWNER'S CONSIDERATION TO FULLY INSULATE BUILDING.

FLOOR PLAN LEGEND

PATH OF TRAVEL

EXIT SIGN, PER RCP A-114.
REFER TO ELECTRICAL DRAWINGS

FE — FIRE EXTINGUISHER, SEE DETAIL 19/A-601

WALL TYPE TAG

OCCUPANCY LOAD PER ROOM

TOTAL OCCUPANCY LOAD AT EACH SPECIFIC LOCATION, PER PLANS

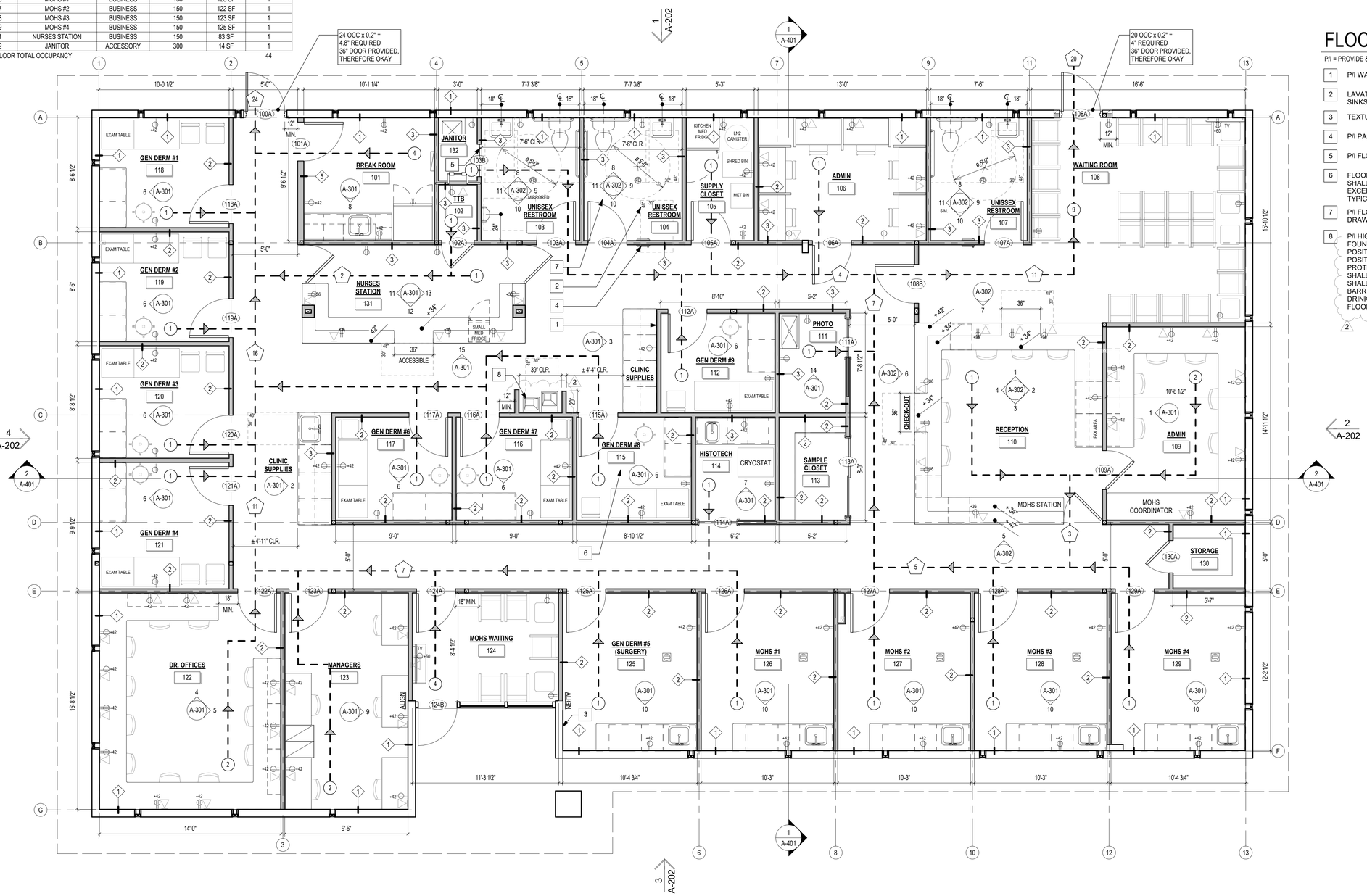

1 **PROPOSED FLOOR PLAN**
Ref: A-201 / Scale: 1/4" = 1'-0"

FLOOR PLAN KEYNOTES

P/I = PROVIDE & INSTALL

1. P/I WALL BACKING @ ALL WALL HUNG EQUIPMENT, CABINETS, ETC.
2. LAVATORY & FAUCET, SEE PLUMBING DRAWINGS. ALL LAVATORIES AND SINKS TO COMPLY WITH SECTION 11B-606.
3. TEXTURE ALL EXISTING GYP BD TO MATCH NEW FINISH REQUIREMENTS.
4. P/I PASS-THRU SPECIMEN DOOR.
5. P/I FLOOR MOUNTED MOP SINK BASIN & FAUCET PER PLUMBING DRAWINGS.
6. FLOOR OR GROUND SURFACES OF A CLEAR FLOOR OR GROUND SPACE SHALL COMPLY WITH SECTION 11B-302. CHANGES IN LEVEL, SLOPES EXCEEDING 1:48, AND DETECTALBLE WANRINGS SHALL NOT BE PERMITTED, TYPICAL TO ALL EXAM ROOMS.
7. P/I FLOOR DRAINS, TYPICAL AT ALL RESTROOMS. REFER TO PLUMBING DRAWINGS.
8. P/I HIGH-LOW ADA COMPLAINT DRINKING FOUNTAIN. DRINKING FOUNTAIN SHALL EITHER BE LOCATED COMPLETELY WITHIN ALCOVES, POSITIONED COMPLETELY BETWEEN WING WALLS, OR OTHERWISE POSITIONED SO AS NOT TO ENCROACH INTO PEDESTRIAN WAYS. THE PROTECTED AREA WITHIN WHICH A DRINKING FOUNTAIN IS LOCATED SHALL BE 32 INCHES WIDE MINIMUM AND 18 INCHES DEEP MINIMUM AND SHALL COMPLY WITH SECTION 11B-305.7. WHEN USED, WING WALLS OR BARRIERS SHALL PROJECT HORIZONTALLY AT LEAST AS FAR AS THE DRINKING FOUNTAIN AND TO WITHIN 6 INCHES VERTICALLY FROM THE FLOOR OR GROUND SURFACE. (11B-602.9)

2

NDAA group architects
4990 N Harbor Drive, Ste 201
San Diego, CA 92106

tel: 619-297-8066
web: www.noaainc.com

LICENSED ARCHITECT DANUBE TALIB No. C38946 REN 11/30/2023 STATE OF CALIFORNIA

DO NOT SCALE DRAWINGS.
ANY DISCREPANCIES TO BE REVIEWED WITH THE ARCHITECT.

SAN DIEGO FAMILY DERMATOLOGY

222 W. MADISON AVENUE
EL CAJON, CA 92020

REVISION SCHEDULE		
Nº	DATE	ISSUE
1	07/06/2023	1ST CITY REVIEW
2	08/22/2023	2ND CITY REVIEW

Project No: BP-2023-0267
Project Start Date: Issue Date
Drawn: Designer
Checked: Checker
Revision: 2
Sheet Name:

PROPOSED FLOOR PLAN

Scale: As indicated
Sheet No:

A-112

8/25/2023 10:51:27 AM

RCP DEMO KEYNOTES

R/E = REMOVE EXISTING

1. R/E T-GRID AND CEILING PLANELS IN THEIR ENTIRETY.
2. R/E LAY-IN INSULATION, WHERE REQUIRED FOR NEW CONSTRUCTION.
3. R/E DRYWALL CEILINGS IN THEIR ENTIRETY.
4. R/E LIGHT FIXTURES IN THEIR ENTIRETY.
5. R/E HCAV SUPPLY AND RETURN REGISTERS AND ASSOCIATED DUCTWORK IN THEIR ENTIRETY.

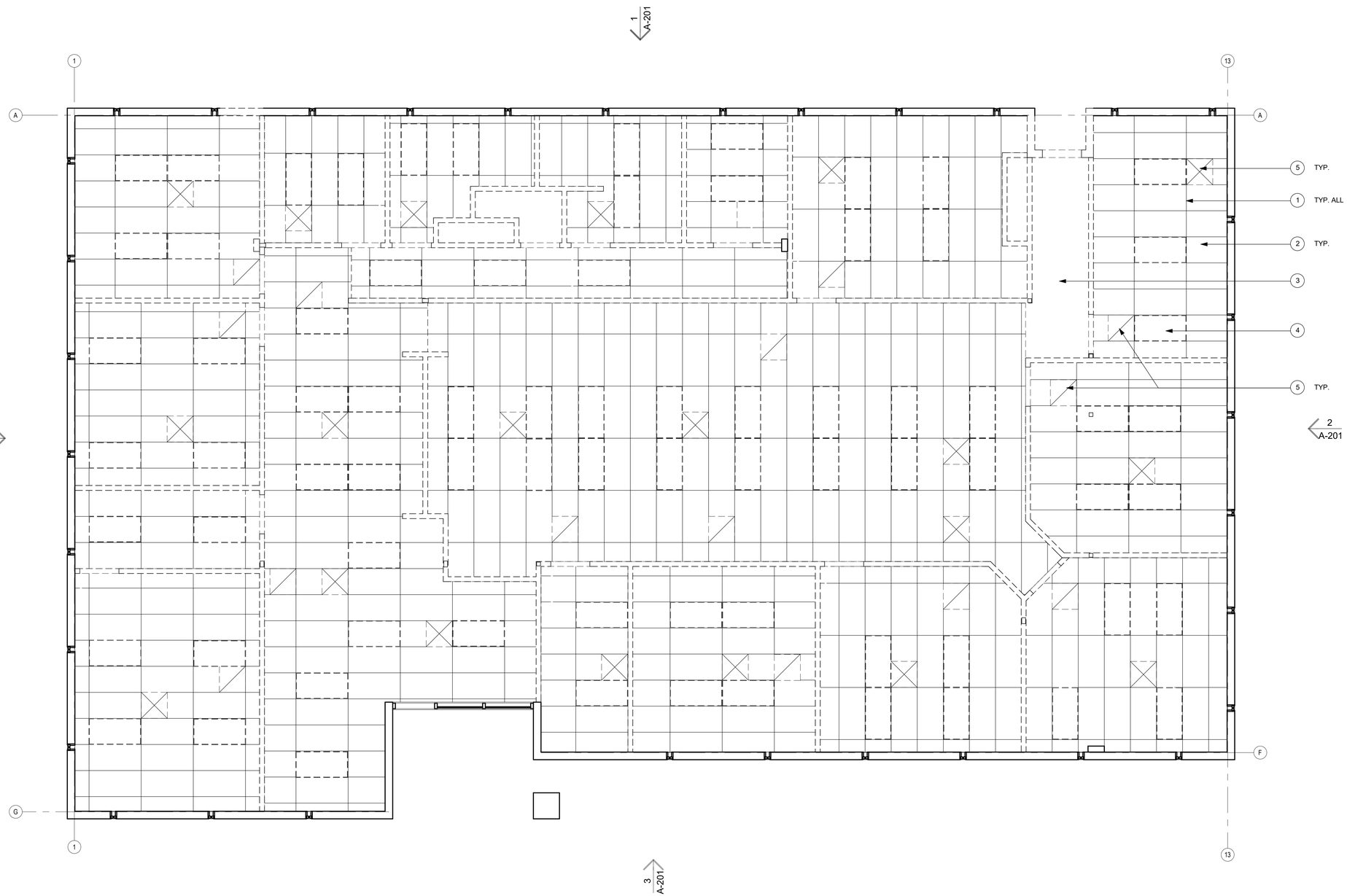

1 EXISTING/ DEMO REFLECTED CEILING PLAN
Ref: A-201 / Scale: 1/4" = 1'-0"

NOAA group architects
4990 N Harbor Drive, Ste 201
San Diego, CA 92106

tel: 619-297-8066
web: www.noaainc.com

LICENSED ARCHITECT
DANUBE TALANT
No. C38946
REN 11/30/2023
STATE OF CALIFORNIA

DO NOT SCALE DRAWINGS.
ANY DISCREPANCIES TO BE REVIEWED WITH THE ARCHITECT.

SAN DIEGO FAMILY DERMATOLOGY

222 W. MADISON AVENUE
EL CAJON, CA 92020

REVISION SCHEDULE

Nº	DATE	ISSUE
1	07/06/2023	1ST CITY REVIEW
2	08/22/2023	2ND CITY REVIEW

Project No: BP-2023-0267
Project Start Date: Issue Date
Drawn: Designer
Checked: Checker
Revision:
Sheet Name:

EXISTING/DEMO REFLECTED CEILING PLAN

Scale: 1/4" = 1'-0"
Sheet No:

North: TRUE N PROJECT

A-113

8/25/2023 10:51:28 AM

RCP LEGEND

2X4 T-GRID CEILING SYSTEM. REFER 4,5,7,10/A-601 FOR DETAILS	CEILING ACCESS HATCH
2'X4' RECESSED LIGHTING @ 2X4 A.C.T. GRID, REFER TO ELECTRICAL DRAWINGS	SUPPLY AIR, REFER TO MECHANICAL DRAWINGS
2'X2' RECESSED LIGHTING @ 2X4 A.C.T. GRID, REFER TO ELECTRICAL DRAWINGS	RETURN AIR, REFER TO MECHANICAL DRAWINGS.
	EXHAUST FAN, REFER TO MECHANICAL DRAWINGS

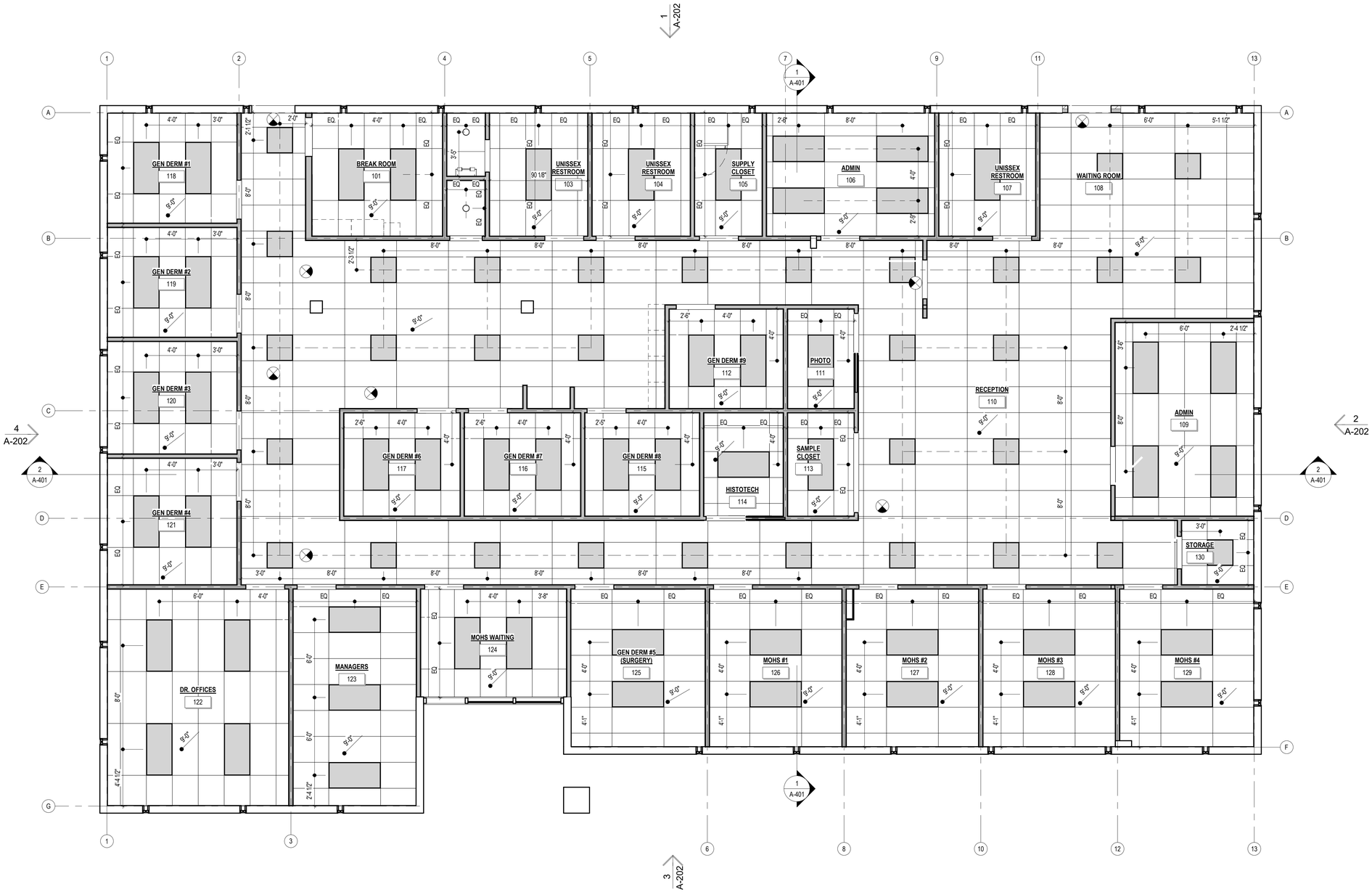

1 PROPOSED REFLECTED CEILING PLAN
Ref: A-201 / Scale: 1/4" = 1'-0"

NOAA group architects
4990 N Harbor Drive, Ste 201
San Diego, CA 92106
tel: 619-297-8066
web: www.noaainc.com

LICENSED ARCHITECT DANUBE TALANT No. C38946 REN 11/30/2023 STATE OF CALIFORNIA

DO NOT SCALE DRAWINGS.
ANY DISCREPANCIES TO BE REVIEWED WITH THE ARCHITECT.

SAN DIEGO FAMILY DERMATOLOGY

222 W. MADISON AVENUE
EL CAJON, CA 92020

REVISION SCHEDULE

Nº	DATE	ISSUE
1	07/06/2023	1ST CITY REVIEW
2	08/22/2023	2ND CITY REVIEW

Project No: BP-2023-0267
Project Start Date: Issue Date
Drawn: Designer
Checked: Checker
Revision:
Sheet Name:

PROPOSED REFLECTED CEILING PLAN

Scale: 1/4" = 1'-0"
Sheet No:

North: TRUE PROJECT

A-114

8/25/2023 10:51:30 AM

ROOF PLAN DEMO KEYNOTES

R/E = REMOVE EXISTING

1. R/E MECHANICAL UNITS AND ASSOCIATED DUCTWORK IN THEIR ENTIRETY. TYPICAL (5) LOCATIONS.
2. REMOVE EXISTING MECHANICAL PLATFORMS IN THEIR RNTIRETY.
3. REMOVE EXISTING ROOF HATCH IN ITS ENTIRETY, AS REQUIRED FOR NEW PREFABRICATED ROOF HATCH.
4. R/E PORTION OF ROOF DECK TO ALLOW FOR NEW RTU, PER MECHANICAL DRAWINGS.

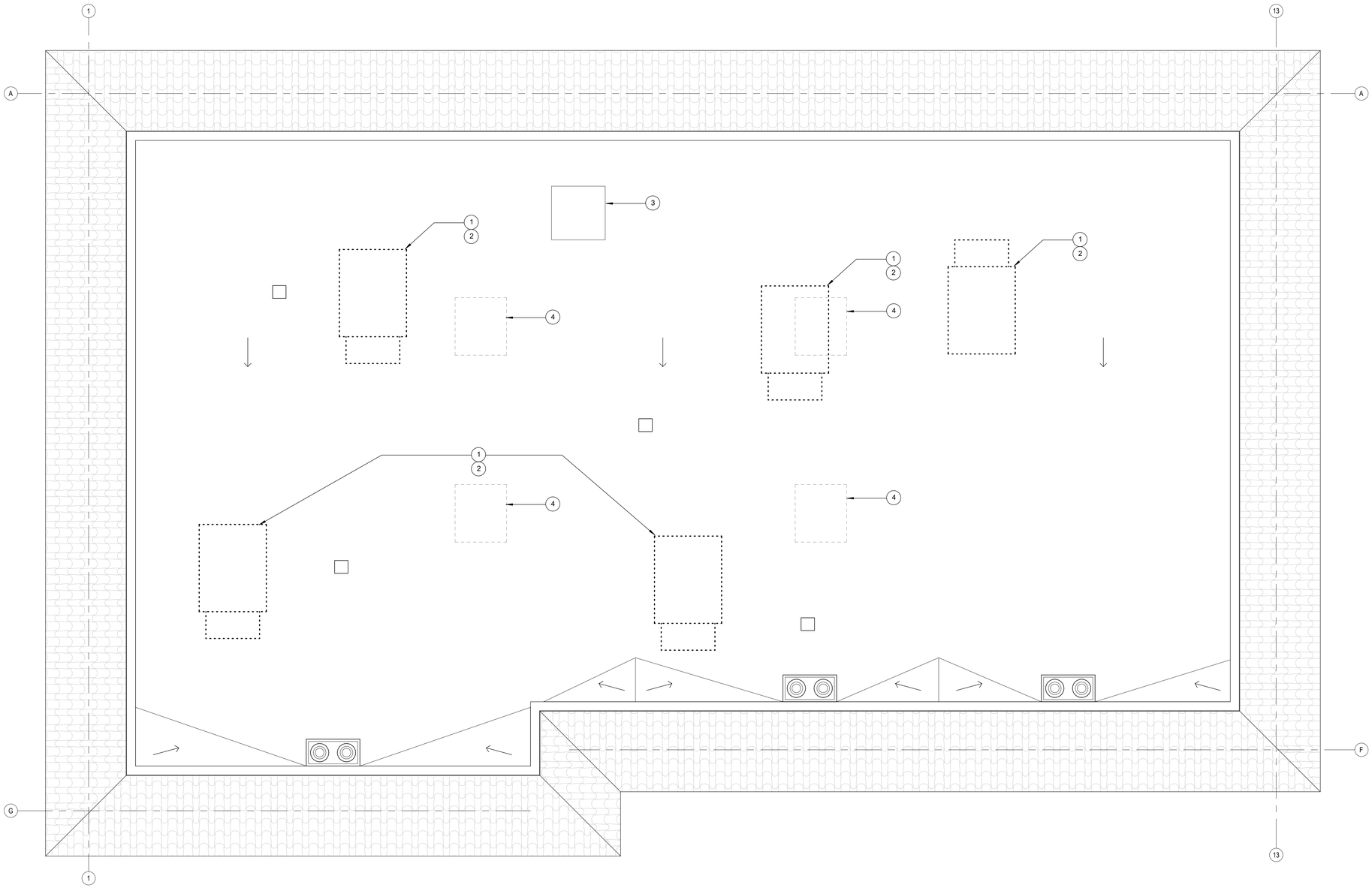

1 EXISTING/ DEMO ROOF PLAN
Ref: A-201 / Scale: 1/4" = 1'-0"

NDAA group architects
4990 N Harbor Drive, Ste 201
San Diego, CA 92106

tel: 619-297-8066
web: www.noaainc.com

LICENSED ARCHITECT
DANUBE TALANT
No. C38946
REN 11/30/2023
STATE OF CALIFORNIA

DO NOT SCALE DRAWINGS.
ANY DISCREPANCIES TO BE REVIEWED WITH THE ARCHITECT.

SAN DIEGO FAMILY DERMATOLOGY
222 W. MADISON AVENUE
EL CAJON, CA 92020

REVISION SCHEDULE

Nº	DATE	ISSUE
1	07/06/2023	1ST CITY REVIEW
2	08/22/2023	2ND CITY REVIEW

Project No: BP-2023-0267
Project Start Date: Issue Date
Drawn: Designer
Checked: Checker
Revision:
Sheet Name:

EXISTING/DEMO ROOF PLAN

Scale: 1/4" = 1'-0"
Sheet No:

North: TRUE N PROJECT

A-115

8/25/2023 10:51:31 AM

ROOF PLAN KEYNOTES

P/I = PROVIDE & INSTALL

1. NEW BILCO (OR EQUAL) 30" X 36" ROOF HATCH WITH HOLD-OPEN ARM AND PREFABRICATED METAL CURB.
2. REPAIR GRAVEL CAPPED ROOF AND SUBSTRATE AS REQUIRED FOR INSTALLATION OF NEW MWCHANICAL EQUIPMENT, REMOVAL OF MECHANICAL EQUIPMENT, VENTS, ROOF ACCESS, ETC. NOTE: PROVIDE ALTERNATE PRICE TO REPLACE EXISTING GRAVEL CAPPED ROOF IN ITS ENTIRETY, WITH A WHITE REFLECTIVE ONE-PIECE TPO ROOF.
3. REPAIR/REPLACE EXISTING GALVANIZED METAL CAP FLASHING AS REQUIRED.
4. POWER WASH EXISTING CONCRETE TILE ROOF IN ITS ENTIRETY. REPLACE ANY BROKEN TILES WITH TILES TO MATCH EXISTING TILES.
5. PROVIDE INFILL 2X FRAMING AND PLYWOOD SHEATHING (TO MATCH EXISTING) AT REMOVED MECHANICAL UNITS.
6. PROVIDE NEW MECHANICAL CURBS PEPR M-100. COORDINATE EXACT LOCATION WITH EXISTING ROOF FRAMING LOCATIONS. PROVIDE 4X BLOCKING BENEATH ROOF SHEATHING , AS REQUIRED.
7. EXISTING ROOF VENTS TO REMAIN.
8. GC TO PROVIDE ALTERNATE TO REPLACE EXISTING ROOF DRAINS WITH "ZURN" DRAIN COMBINATION RD/OD. TYPICAL AT THREE LOCATIONS.

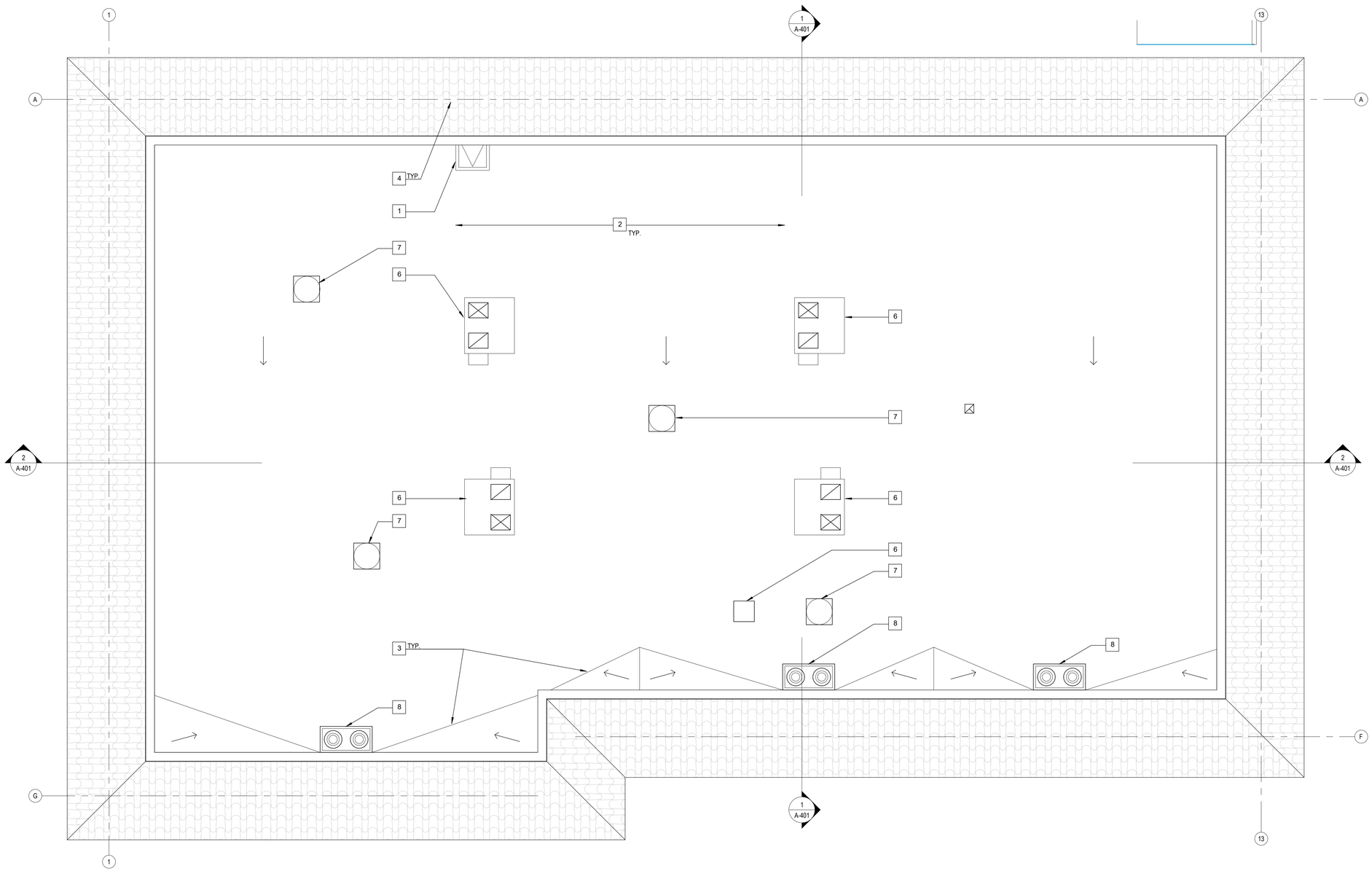

1 **PROPOSED ROOF PLAN**
Ref: A-201 / Scale: 1/4" = 1'-0"

NOAA group architects
4990 N Harbor Drive, Ste 201
San Diego, CA 92106

tel: 619-297-8066
web: www.noaainc.com

LICENSED ARCHITECT
DANUBE TALANT
No. C38946
REN 11/30/2023
STATE OF CALIFORNIA

DO NOT SCALE DRAWINGS.
ANY DISCREPANCIES TO BE REVIEWED WITH THE ARCHITECT.

SAN DIEGO FAMILY DERMATOLOGY
222 W. MADISON AVENUE
EL CAJON, CA 92020

REVISION SCHEDULE

Nº	DATE	ISSUE
1	07/06/2023	1ST CITY REVIEW
2	08/22/2023	2ND CITY REVIEW

Project No: BP-2023-0267
Project Start Date: Issue Date
Drawn: Designer
Checked: Checker
Revision:
Sheet Name:

PROPOSED ROOF PLAN

Scale: 1/4" = 1'-0"
Sheet No:

North: TRUE PROJECT

A-116

8/25/2023 10:51:32 AM

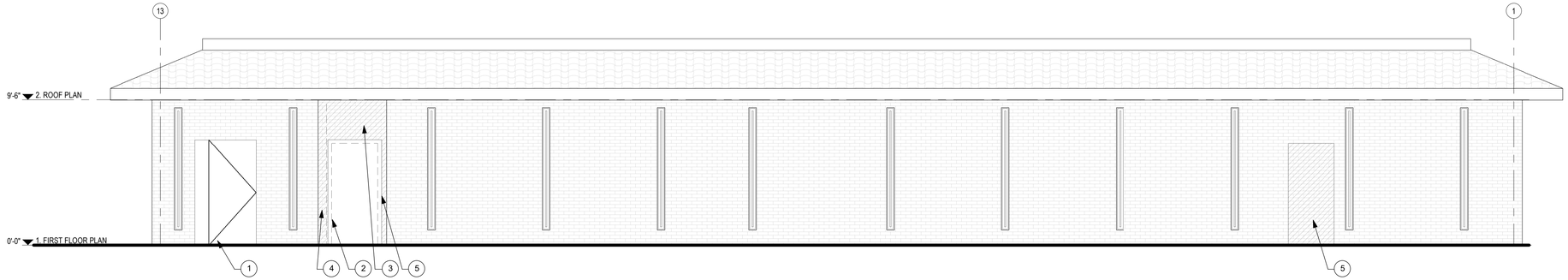

1 **NORTH - EXISTING/ DEMO ELEVATION**
Ref: A-111 / Scale: 1/4" = 1'-0"

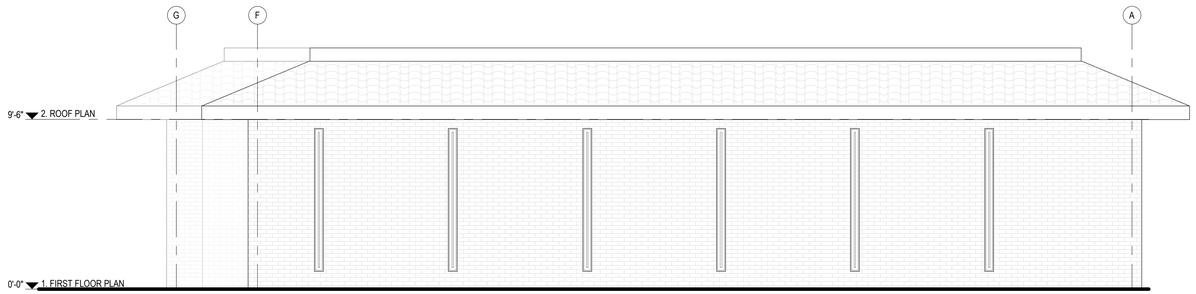

2 **EAST - EXISTING/ DEMO ELEVATION**
Ref: A-111 / Scale: 1/4" = 1'-0"

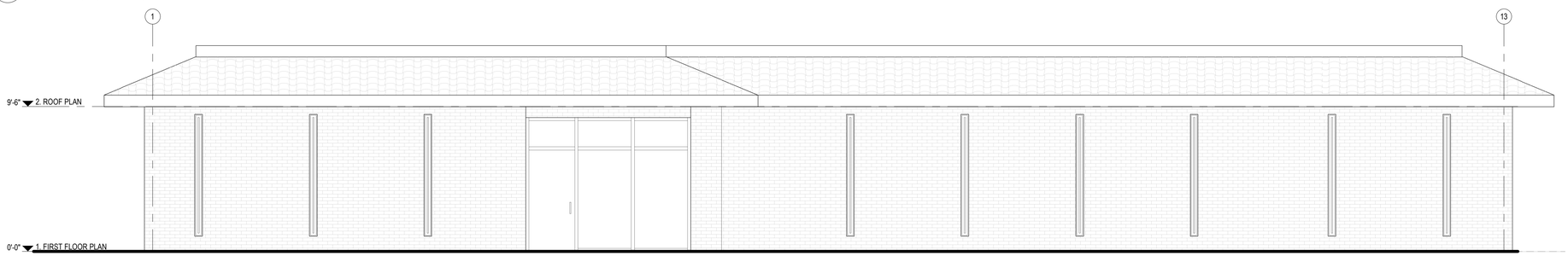

3 **SOUTH - EXISTING/ DEMO ELEVATION**
Ref: A-111 / Scale: 1/4" = 1'-0"

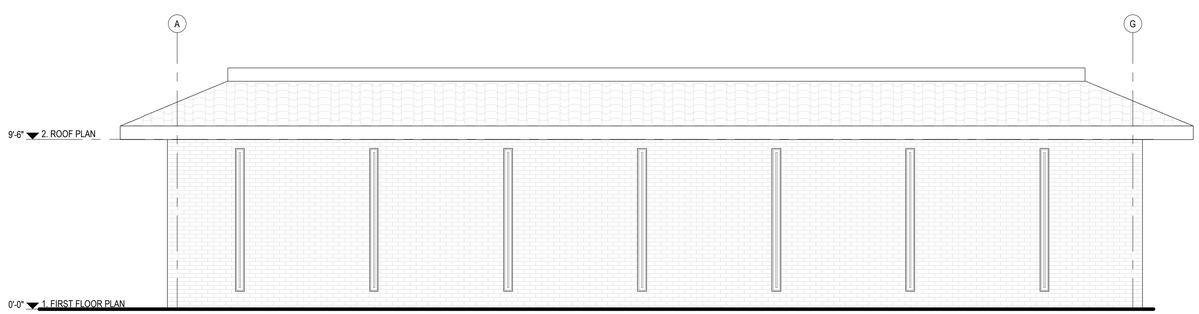

4 **WEST - EXISTING/ DEMO ELEVATION**
Ref: A-111 / Scale: 1/4" = 1'-0"

DEMO EXTERIOR ELEVATION KEYNOTES

R/E = REMOVE EXISTING

1. R/E STEEL GATE FROM DOORWAY.
2. R/E ENTRY DOOR AND FRAME IN ITS ENTIRETY.
3. R/E BRICK VENEER AND FRAMED WALL AT AREA OF ENLARGED LOBBY. SEE DEMO FLOOR PLAN FOR ADDITIONAL INFORMATION.
4. R/E ALARM AT ENTRY DOORWAY.
5. R/E BRICK VENEER AND FRAMED WALL AT AREA OF NEW DOOR. SAVE BRICK AS REQUIRED TO REWORK OPEENINGS FOR NEW DOORS.

NOAA group architects
4990 N Harbor Drive, Ste 201
San Diego, CA 92106

tel: 619-297-8066
web: www.noaainc.com

LICENSED ARCHITECT
DANUBE TALANT
No. C38946
REN 11/30/2023
STATE OF CALIFORNIA

DO NOT SCALE DRAWINGS.
ANY DISCREPANCIES TO BE REVIEWED WITH THE ARCHITECT.

SAN DIEGO FAMILY DERMATOLOGY

222 W. MADISON AVENUE
EL CAJON, CA 92020

REVISION SCHEDULE

Nº	DATE	ISSUE
1	07/06/2023	1ST CITY REVIEW
2	08/22/2023	2ND CITY REVIEW

Project No: BP-2023-0267
Project Start Date: Issue Date
Drawn: Designer
Checked: Checker
Revision:
Sheet Name:

EXISTING ELEVATIONS

Scale: 1/4" = 1'-0"
Sheet No:

A-201

8/25/2023 10:51:35 AM

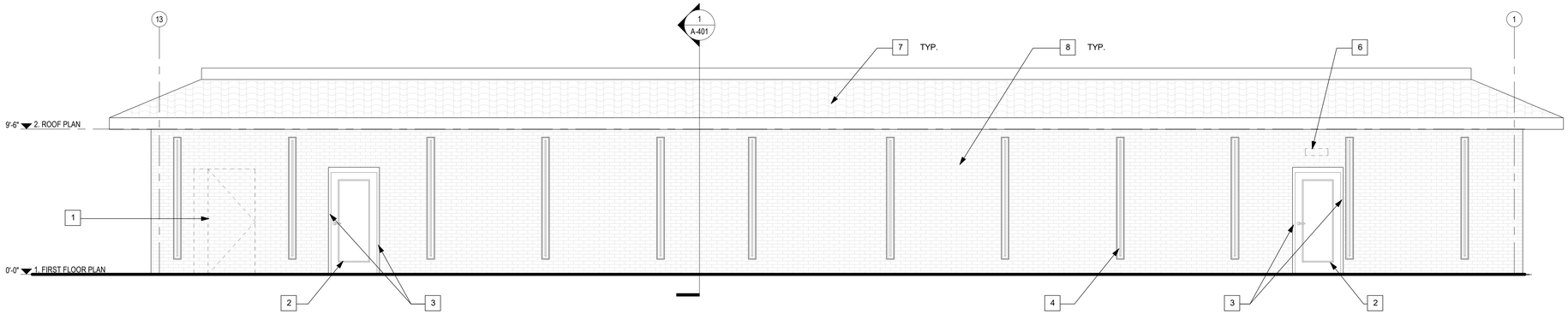

1 NORTH - PROPOSED ELEVATION
Ref: A-112 / Scale: 1/4" = 1'-0"

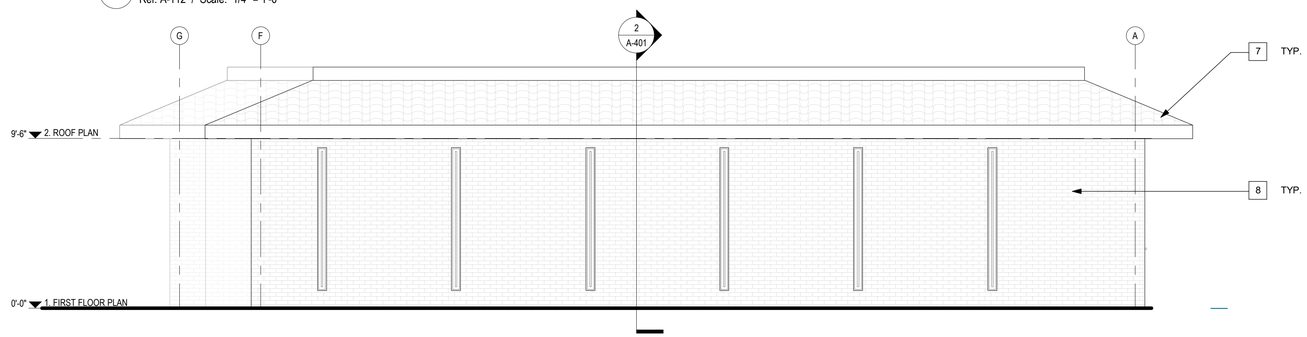

2 EAST - PROPOSED ELEVATION
Ref: A-111 / Scale: 1/4" = 1'-0"

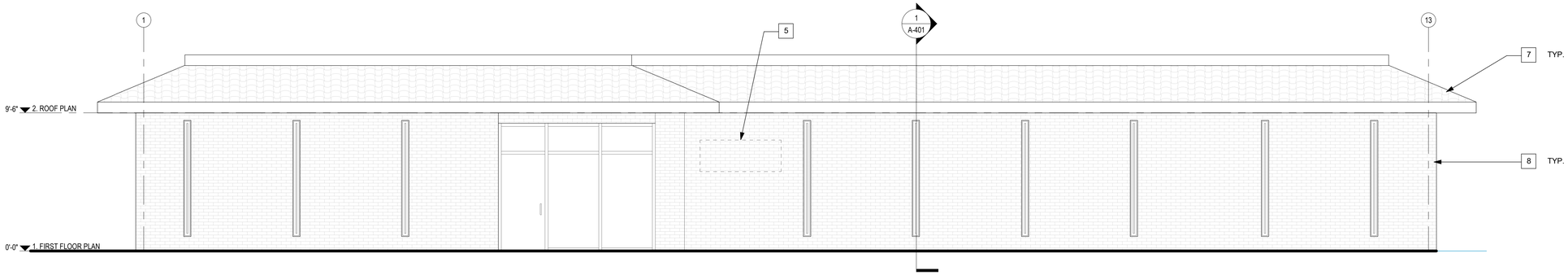

3 SOUTH - PROPOSED ELEVATION
Ref: A-112 / Scale: 1/4" = 1'-0"

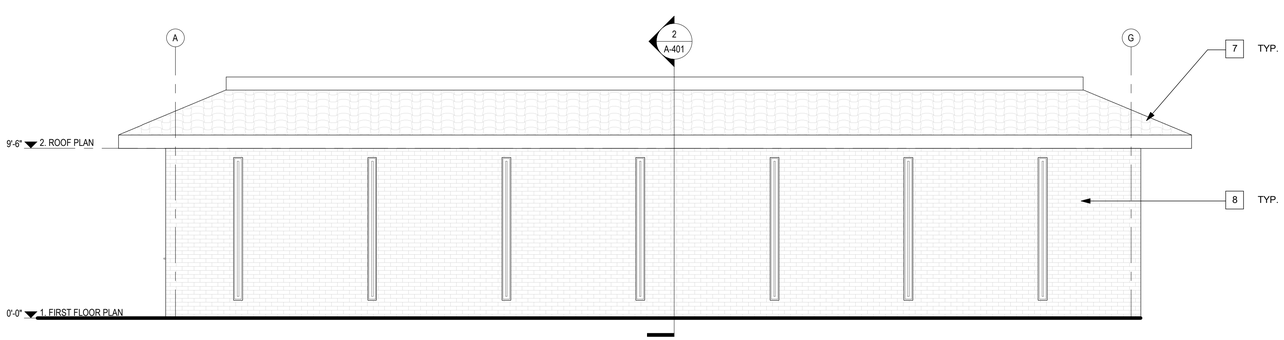

4 WEST - PROPOSED ELEVATION
Ref: A-111 / Scale: 1/4" = 1'-0"

EXTERIOR ELEVATION KEYNOTES

1. EXISTING SWITCHGEAR TO REMAIN. PROVIDE PRIME & PAINT (COLOR TBD).
2. NEW ENTRY DOOR, FRAME AND HARDWARE, PER DOOR SCHEDULE.
3. REWORK/ REPATCH BRICK SYSTEM AT NEW DOORS, AS REQUIRED TO MATCH EXISTING BRICK WALL.
4. EXISTING WINDOWS TO REMAIN. REPLACE ANY BROKEN GLAZING, AS REQUIRED.
5. REWORK/ REPAINT SINGNAGE TO READ: "SAN DIEGO FAMILY DERMATOLOGY", COLORS TBD.
6. WET LOCATION EMERGENCY WALL SCONCE, PER ELECTRICAL DRAWINGS.
7. G.C. TO PROVIDE POWER WASH TO EXISTING CONCRETE TILE ROOF IN ITS ENTIRETY. REPLACE ANY BROKEN ROOF TILES TO MATCH EXISTING.
8. G.C. TO PROVIDE POWER WASH TO EXISTING EXTERIOR BRICK WALLS IN ITS ENTIRETY. REPLACE ANY BROKEN BRICKS TO MATCH EXISTING.

NDAA group architects
4990 N Harbor Drive, Ste 201
San Diego, CA 92106

tel: 619-297-8066
web: www.noaainc.com

LICENSED ARCHITECT
DANUBE TALANT
No. C38946
REN 11/30/2023
STATE OF CALIFORNIA

DO NOT SCALE DRAWINGS.
ANY DISCREPANCIES TO BE REVIEWED WITH THE ARCHITECT.

SAN DIEGO FAMILY DERMATOLOGY

222 W. MADISON AVENUE
EL CAJON, CA 92020

REVISION SCHEDULE

Nº	DATE	ISSUE
1	07/06/2023	1ST CITY REVIEW
2	08/22/2023	2ND CITY REVIEW

Project No: BP-2023-0267
Project Start Date: Issue Date
Drawn: Designer
Checked: Checker
Revision:
Sheet Name:

PROPOSED ELEVATIONS

Scale: 1/4" = 1'-0"
Sheet No:

A-202

8/25/2023 10:51:41 AM

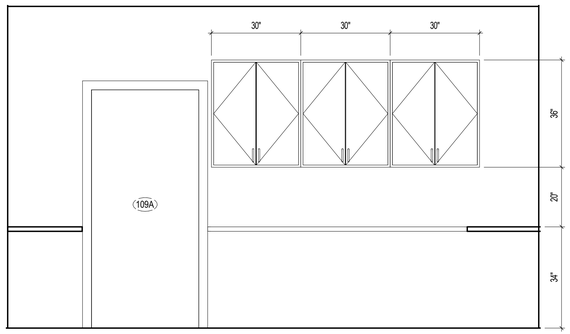

1 **ADMIN #109**
Ref: A-112 / Scale: 1/2" = 1'-0"

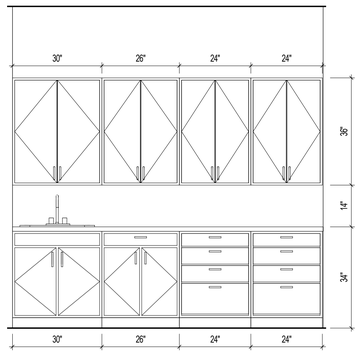

2 **CLINIC SUPPLIES - 1**
Ref: A-112 / Scale: 1/2" = 1'-0"

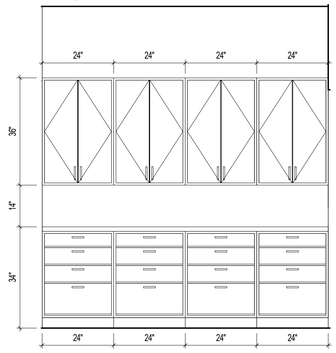

3 **CLIINIC SUPPLIES**
Ref: A-112 / Scale: 1/2" = 1'-0"

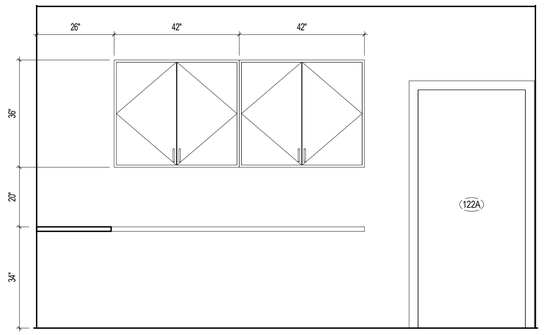

4 **DR. OFFICES #122**
Ref: A-112 / Scale: 1/2" = 1'-0"

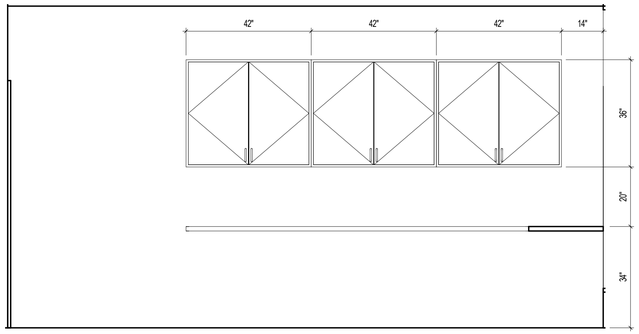

5 **DR. OFFICES #122**
Ref: A-112 / Scale: 1/2" = 1'-0"

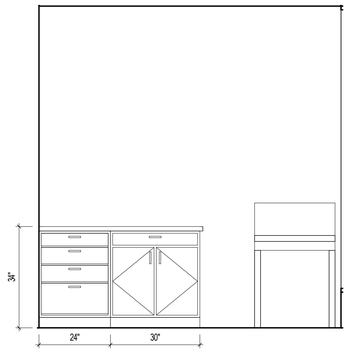

6 **TYPICAL TO GEN DERM #1, 2, 3, 4, 6, 7, 8, 9**
Ref: A-112 / Scale: 1/2" = 1'-0"

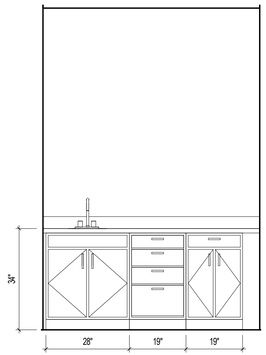

7 **HISTOTECH #114**
Ref: A-112 / Scale: 1/2" = 1'-0"

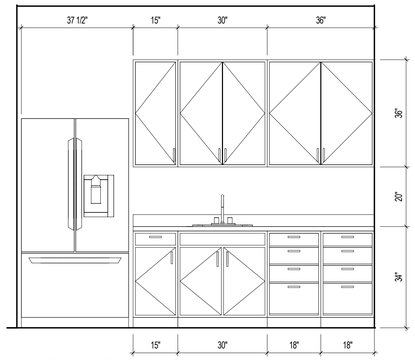

8 **BREAK ROOM #101**
Ref: A-112 / Scale: 1/2" = 1'-0"

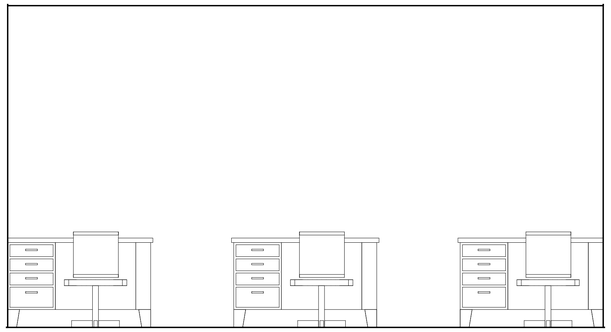

9 **MANAGERS #123**
Ref: A-112 / Scale: 1/2" = 1'-0"

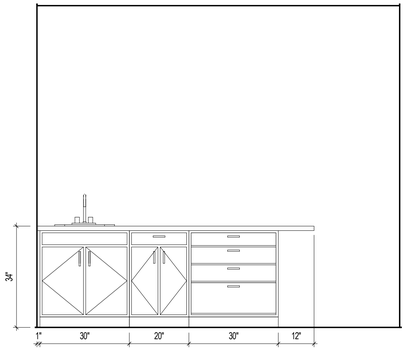

10 **TYPICAL TO MOHS & GEN DERM #5**
Ref: A-112 / Scale: 1/2" = 1'-0"

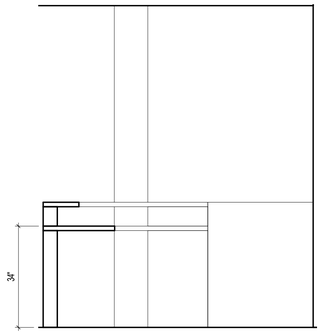

11 **NURSE STATION**
Ref: A-112 / Scale: 1/2" = 1'-0"

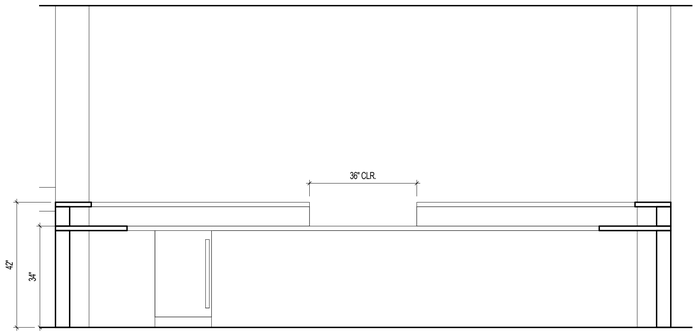

12 **NURSE STATION**
Ref: A-112 / Scale: 1/2" = 1'-0"

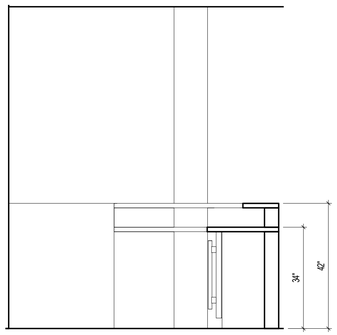

13 **NURSE STATION**
Ref: A-112 / Scale: 1/2" = 1'-0"

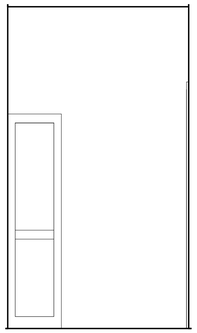

14 **PHOTO #111**
Ref: A-112 / Scale: 1/2" = 1'-0"

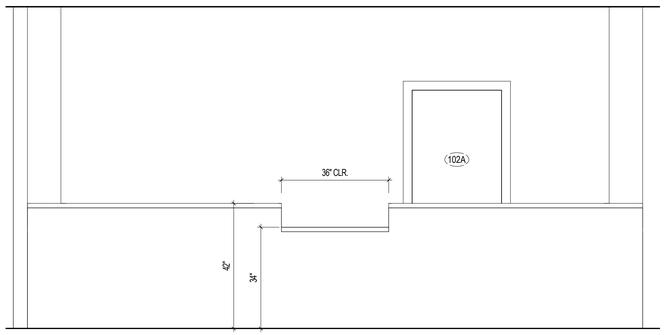

15 **NURSE STATION**
Ref: A-112 / Scale: 1/2" = 1'-0"

NOAA group architects
4990 N Harbor Drive, Ste 201
San Diego, CA 92106

tel: 619-297-8066
web: www.noaainc.com

LICENSED ARCHITECT
DANUBE TALANT
No. C38946
REN 11/30/2023
STATE OF CALIFORNIA

DO NOT SCALE DRAWINGS.
ANY DISCREPANCIES TO BE REVIEWED WITH THE ARCHITECT.

SAN DIEGO FAMILY DERMATOLOGY

222 W. MADISON AVENUE
EL CAJON, CA 92020

REVISION SCHEDULE

Nº	DATE	ISSUE
1	07/06/2023	1ST CITY REVIEW
2	08/22/2023	2ND CITY REVIEW

Project No: BP-2023-0267
Project Start Date: Issue Date
Drawn: Designer
Checked: Checker
Revision:
Sheet Name:

INTERIOR ELEVATIONS

Scale: 1/2" = 1'-0"
Sheet No:

A-301

8/25/2023 10:51:44 AM

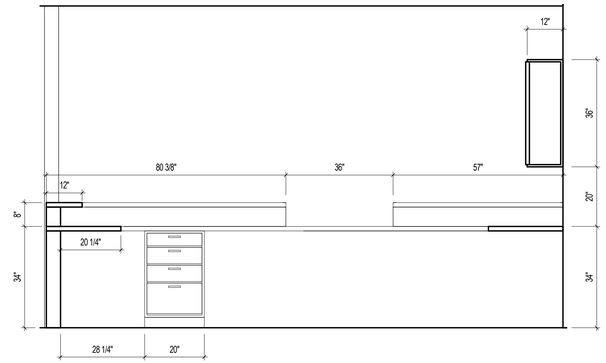

1 RECEPTION #110
Ref: A-112 / Scale: 1/2" = 1'-0"

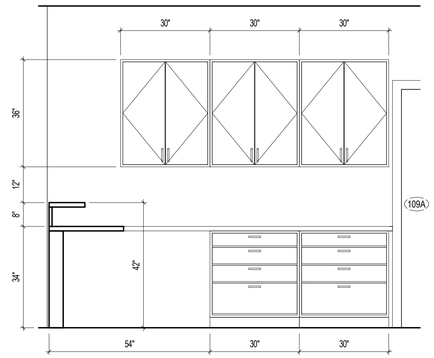

2 RECEPTION #110
Ref: A-112 / Scale: 1/2" = 1'-0"

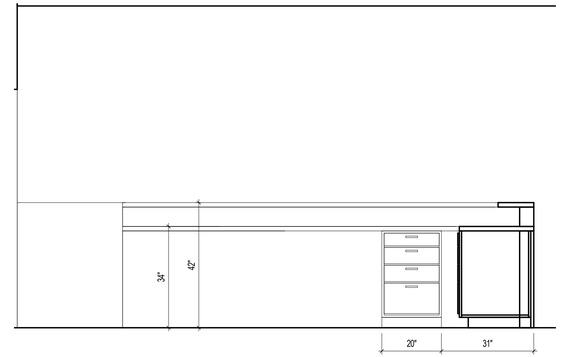

3 RECEPTION #110
Ref: A-112 / Scale: 1/2" = 1'-0"

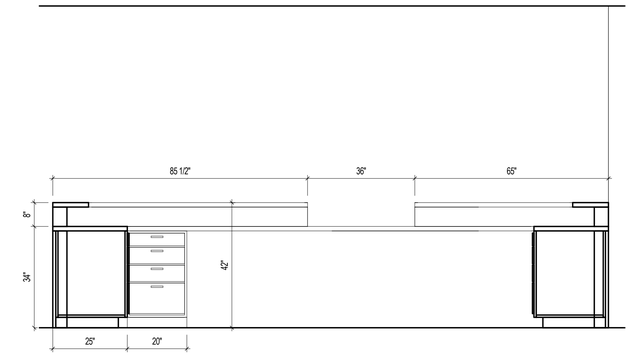

4 RECEPTION #110
Ref: A-112 / Scale: 1/2" = 1'-0"

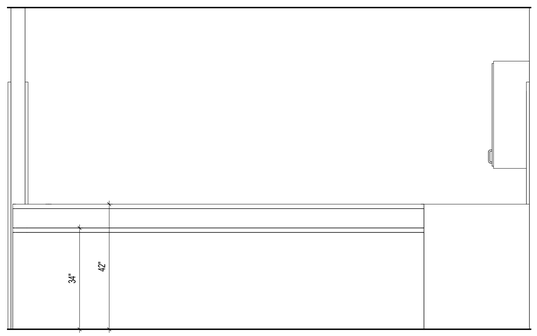

5 RECEPTION #110
Ref: A-112 / Scale: 1/2" = 1'-0"

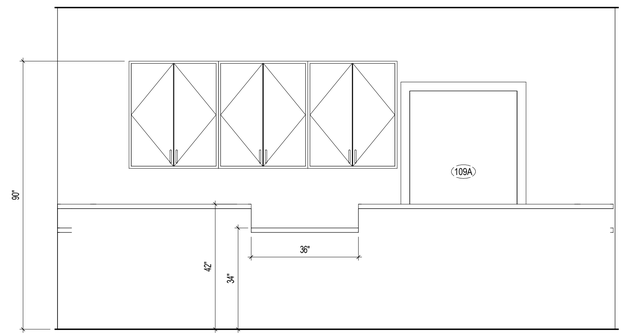

6 RECEPTION #110
Ref: A-112 / Scale: 1/2" = 1'-0"

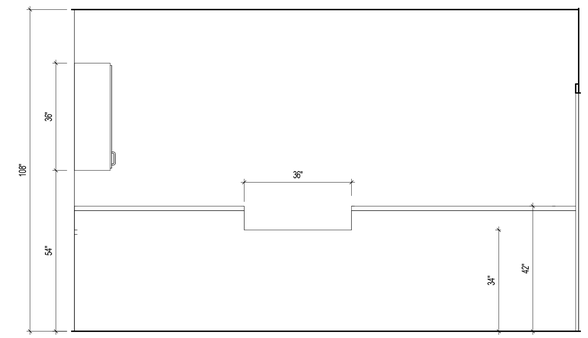

7 RECEPTION #110
Ref: A-112 / Scale: 1/2" = 1'-0"

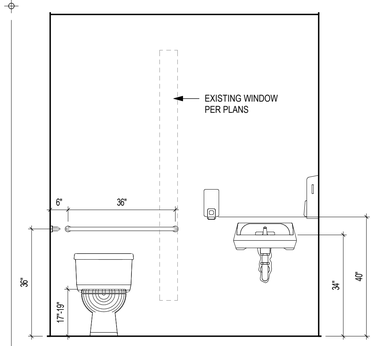

8 LAVATORY - TYP. FOR 103, 104, 107
Ref: A-112 / Scale: 1/2" = 1'-0"

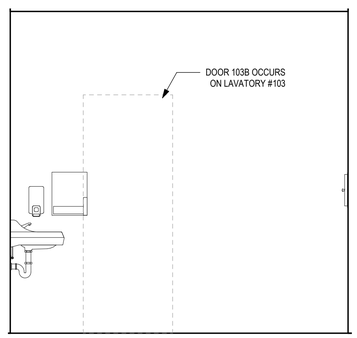

9 LAVATORY - TYP. FOR 103, 104, 107
Ref: A-112 / Scale: 1/2" = 1'-0"

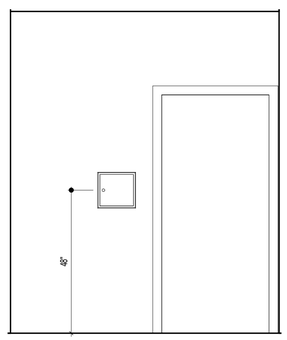

10 LAVATORY - TYP. FOR 103, 104, 107
Ref: A-112 / Scale: 1/2" = 1'-0"

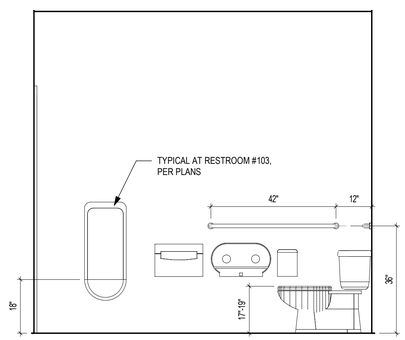

11 LAVATORY - TYP. FOR 103, 104, 107
Ref: A-112 / Scale: 1/2" = 1'-0"

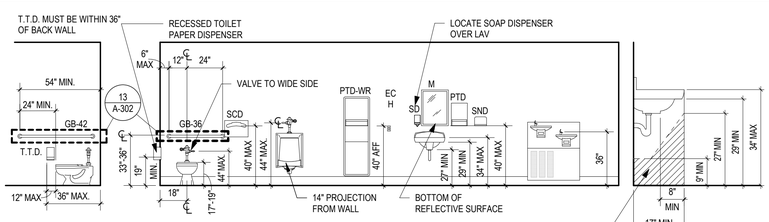

LEGEND:			
GB	GRAB BAR	M	MIRROR
TTD	TOILET TISSUE DISPENSER	PTD	PAPER TOWEL DISPENSER
TC	TOILET PARTITION	SND	SANITARY NAPKIN DISPENSER
EC	ELECTRICAL SWITCH/CONTROL	HD	HAND DRYER
SD	SOAP DISPENSER	WC	WATER CLOSET (TOILET)
PTD-WR	SEMI RECESSED PAPER TOWEL DISPENSER AND WASTE RECEPTICAL	H	HOOK
TTD	COMBINED RECESS MOUNTED TOILET TISSUE, SEAT COVER DISPENSER AND NAPKIN DISPOSAL		

[CBC SECTIONS: 11B-226.4, 11B-305.7.1, 11B-604.4, 11B-604.5, 11B-604.6, 11B-605, 11B-606, 11B-609]

12 PLUMBING FIXTURES STANDARD MOUNTING HEIGHTS
Scale: 1/4" = 1'-0"

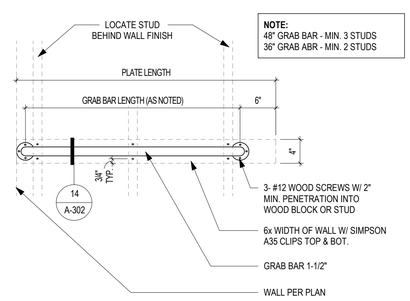

NOTE:
48" GRAB BAR - MIN. 3 STUDS
36" GRAB ABR - MIN. 2 STUDS

13 GRAB BAR MOUNTING ELEVATIONS
Ref: A-302 / Scale: 1" = 1'-0"

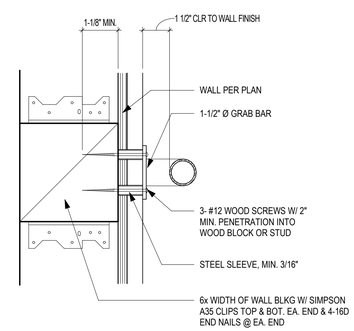

14 GRAB BAR MOUNTING SECTION
Ref: A-302 / Scale: 3" = 1'-0"

RESTROOM GENERAL NOTES

- FLUSH CONTROLS @ WATER CLOSETS SHALL BE MOUNTED ON "WIDE" SIDE AND NOT EXCEED 42" A.F.F.
- TOE CLEARANCES @ TOILET STALLS SHALL BE 9" MIN. & 12" MAX.
- TOILET SEATS SHALL NOT SPRING TO RETURN TO A LIFTED POSITION.
- DOORS ON ACCESSIBLE TOILET STALLS SHALL HAVE A 32" MIN. CLEAR OPENING
- THE BOTTOM OF THE REFLECTIVE SURFACE OF MIRRORS SHALL BE NO HIGHER THAN 40" A.F.F., TOP OF MIRRORS SHALL BE AT LEAST 74" A.F.F.
- DEPTH OF SINKS SHALL BE A MAX. OF 6-1/2"
- FAUCETS THAT ARE LEVER-OPERATED, PUSH-TYPE, TOUCH-TYPE, OR ELECTRONICALLY CONTROLLED MECHANISMS ARE ACCEPTABLE DESIGNS.
- ALL SIGNAGE SHALL COMPLY WITH ACCESSIBILITY STANDARDS.
- FLUSH CONTROLS @ WATER CLOSETS AND URINAL SHALL BE MOUNTED ON "WIDE" SIDE AND NOT EXCEED 44" A.F.F., OPERABLE WITH A MAXIMUM 5 POUNDS OF FORCE, AND SHALL BE OPERABLE WITH ONE HAND & WITHOUT TIGHT GRASPING, PINCHING OR TWISTING OF WRIST.
- ALL CONSTRUCTION IS TO COMPLY WITH CHAPTER 11-B, CBC 2019 ACCESSIBILITY STANDARDS AND CODES, IF A CONFLICT EXISTS BETWEEN THE ACCESSIBILITY STANDARDS AND DRAWINGS, THE ACCESSIBILITY STANDARDS OVERRULE. CONTRACTOR IS TO NOTIFY ARCHITECT OF CONFLICT THAT MAY ARISE PRIOR TO MAKING CHANGES IN FIELD.
- PROVIDE ANTI-GRAFITTI SACRIFICIAL FILM TO ALL RESTROOM MIRRORS.
- THE SURFACE MATERIAL OF ANY WALLS OR OTHER OBJECTS ADJACENT TO GRAB BARS SHALL BE FREE OF ABRASIVE ELEMENTS AND SHALL HAVE A MINIMUM 1/8" RADIUS ON ANY EDGE.
- SELF CLOSING VALVES SHALL REMAIN OPEN FOR A MINIMUM OF 10 SECONDS.
- ALL CONSTRUCTION IS TO COMPLY WITH 2019 CBC CHAPTER 11B, ACCESSIBILITY STANDARDS AND CODES, IF A CONFLICT EXISTS BETWEEN THE ACCESSIBILITY STANDARDS AND DRAWINGS, THE ACCESSIBILITY STANDARDS OVERRULE. CONTRACTOR IS TO NOTIFY ARCHITECT OF CONFLICT THAT MAY ARISE PRIOR TO MAKING CHANGES IN FIELD.
- ALL RESTROOMS ARE TO BE RENOVATED, THIS INCLUDES NEW: HARD LID CEILINGS - LIGHTING (WIRING) - FIXTURES - FLOORING - FRP - RR ACCESSORIES - PAINT - EXHAUST

RESTROOM KEYNOTES

1. FLOOR DRAIN, REFER TO PLUMBING DRAWINGS FOR ADDITIONAL INFORMATION.
2. NEW FRP WAINSCOT @ 48" HT.
3. NEW WATER CLOSET: SEE PLUMBING SHEETS FOR MODEL INFORMATION.
4. NEW URINAL: SEE PLUMBING SHEET, P-103 FOR MODEL INFORMATION.
5. NEW LAVATORY: SEE PLUMBING SHEET, P-103 FOR MODEL INFORMATION.
6. NEW MIRROR, CENTERED WITH LAVATORY.
7. NURSE CALL: SEE ELECTRICAL DRAWINGS FOR SPECS. PROVIDED AND INSTALLED BY G.C.
8. GRAB BARS, FASTENERS & MOUNTING DEVICES HAVE BACKING & BE DESIGNED TO SUPPORT A 250 POUND POINT LOAD.
9. FOR BARRIER-FREE INSTALLATION CONTRACTOR SHALL PROVIDE 1-1/2" MINIMUM RECESS FOR CURB IN SUB FLOOR.
10. WATER SUPPLY AND DRAIN PIPES UNDER LAVATORIES AND SINKS SHALL BE INSULATED OR OTHERWISE CONFIGURED TO PROTECT AGAINST CONTACT. THERE SHALL BE NO SHARP OR ABRASIVE SURFACES UNDER LAVATORIES AND SINKS.
11. ALL NEW ACCESSORIES, PER CURRENT CODE. SEE SHEET A-303 FOR RESTROOM ACCESSORY SCHEDULE, GENERAL NOTES, AND STANDARD MOUNTING DETAILS, TYP.

NDAA group architects
4990 N Harbor Drive, Ste 201
San Diego, CA 92106
tel: 619-297-8066
web: www.noaainc.com

LICENSED ARCHITECT
DANUBE TALLY
No. C38946
REN 11/30/2023
STATE OF CALIFORNIA

DO NOT SCALE DRAWINGS.
ANY DISCREPANCIES TO BE REVIEWED WITH THE ARCHITECT.

SAN DIEGO FAMILY DERMATOLOGY

222 W. MADISON AVENUE
EL CAJON, CA 92020

REVISION SCHEDULE		
Nº	DATE	ISSUE
1	07/06/2023	1ST CITY REVIEW
2	08/22/2023	2ND CITY REVIEW

Project No: BP-2023-0267
Project Start Date: Issue Date
Drawn: Designer
Checked: Checker
Revision:
Sheet Name:

INTERIOR ELEVATIONS & RESTROOM NOTES

Scale: As indicated
Sheet No:

A-302

8/25/2023 10:51:47 AM

DOOR SCHEDULE

DOOR MARK	TYPE MARK	WIDTH	HEIGHT	DESCRIPTION
100A	E	3'-0"	6'-8"	
101A	A	3'-0"	6'-8"	
102A	A	2'-6"	6'-8"	
103A	A	3'-0"	6'-8"	
103B	A	2'-6"	6'-8"	
104A	A	3'-0"	6'-8"	
105A	A	3'-0"	6'-8"	
106A	A	3'-0"	6'-8"	
107A	A	3'-0"	6'-8"	
108A	E	3'-0"	6'-8"	
108B	A	3'-0"	6'-8"	
109A	A	3'-0"	6'-8"	
111A	B	3'-0"	6'-8"	
112A	A	3'-0"	6'-8"	
113A	C	6'-0"	6'-8"	
114A	B	3'-0"	6'-8"	
115A	A	3'-0"	6'-8"	
116A	A	3'-0"	6'-8"	
117A	A	3'-0"	6'-8"	
118A	A	3'-0"	6'-8"	
119A	A	3'-0"	6'-8"	
120A	A	3'-0"	6'-8"	
121A	A	3'-0"	6'-8"	
122A	A	3'-0"	6'-8"	
123A	A	3'-0"	6'-8"	
124A	A	3'-0"	6'-8"	
124B	D	3'-0"	6'-8"	
125A	A	3'-0"	6'-8"	
126A	A	3'-0"	6'-8"	
127A	A	3'-0"	6'-8"	
128A	A	3'-0"	6'-8"	
129A	A	3'-0"	6'-8"	
130A	A	2'-6"	6'-8"	

DOOR LEGEND

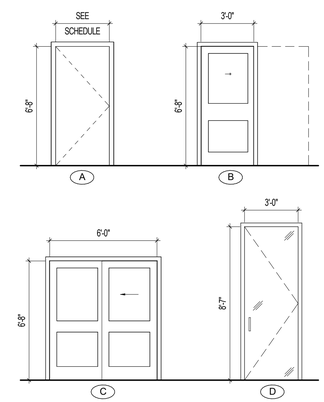

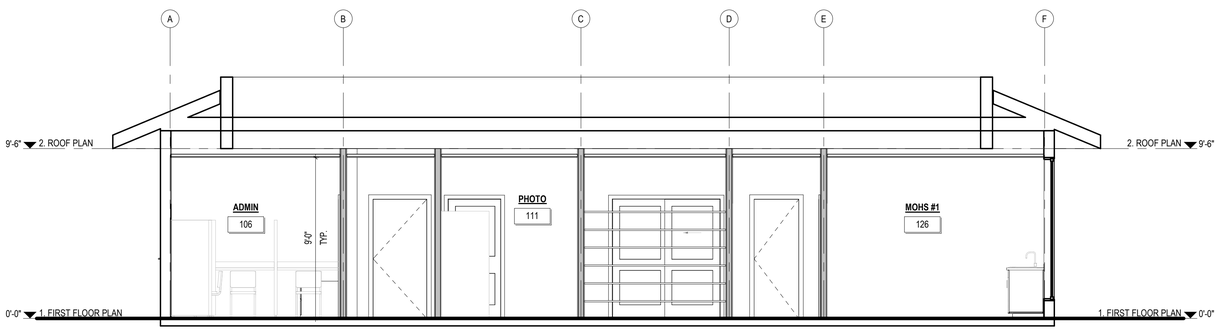

1 **OVERALL BUILDING SECTION**
Ref: A-112 / Scale: 1/4" = 1'-0"

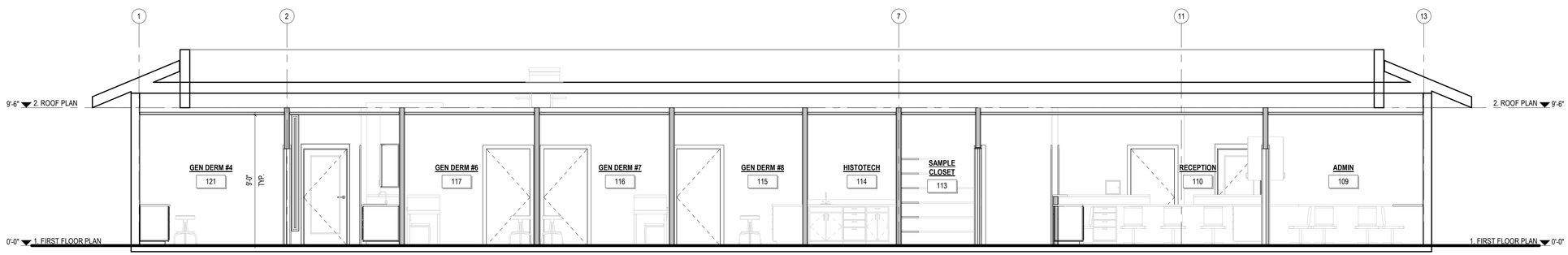

2 **OVERALL BUILDING SECTION**
Ref: A-112 / Scale: 1/4" = 1'-0"

NOAA group architects
4990 N Harbor Drive, Ste 201
San Diego, CA 92106

tel: 619-297-8066
web: www.noaainc.com

LICENSED ARCHITECT
DANUBE TALANT
No. C38946
REN 11/30/2023
STATE OF CALIFORNIA

DO NOT SCALE DRAWINGS.
ANY DISCREPANCIES TO BE REVIEWED WITH THE ARCHITECT.

SAN DIEGO FAMILY DERMATOLOGY
222 W. MADISON AVENUE
EL CAJON, CA 92020

REVISION SCHEDULE

Nº	DATE	ISSUE
1	07/06/2023	1ST CITY REVIEW
2	08/22/2023	2ND CITY REVIEW

Project No: BP-2023-0267
Project Start Date: Issue Date
Drawn: Designer
Checked: Checker
Revision:
Sheet Name:

BUILDING SECTION & DOOR SCHEDULE

Scale: 1/4" = 1'-0"
Sheet No:

A-401

8/25/2023 10:51:50 AM

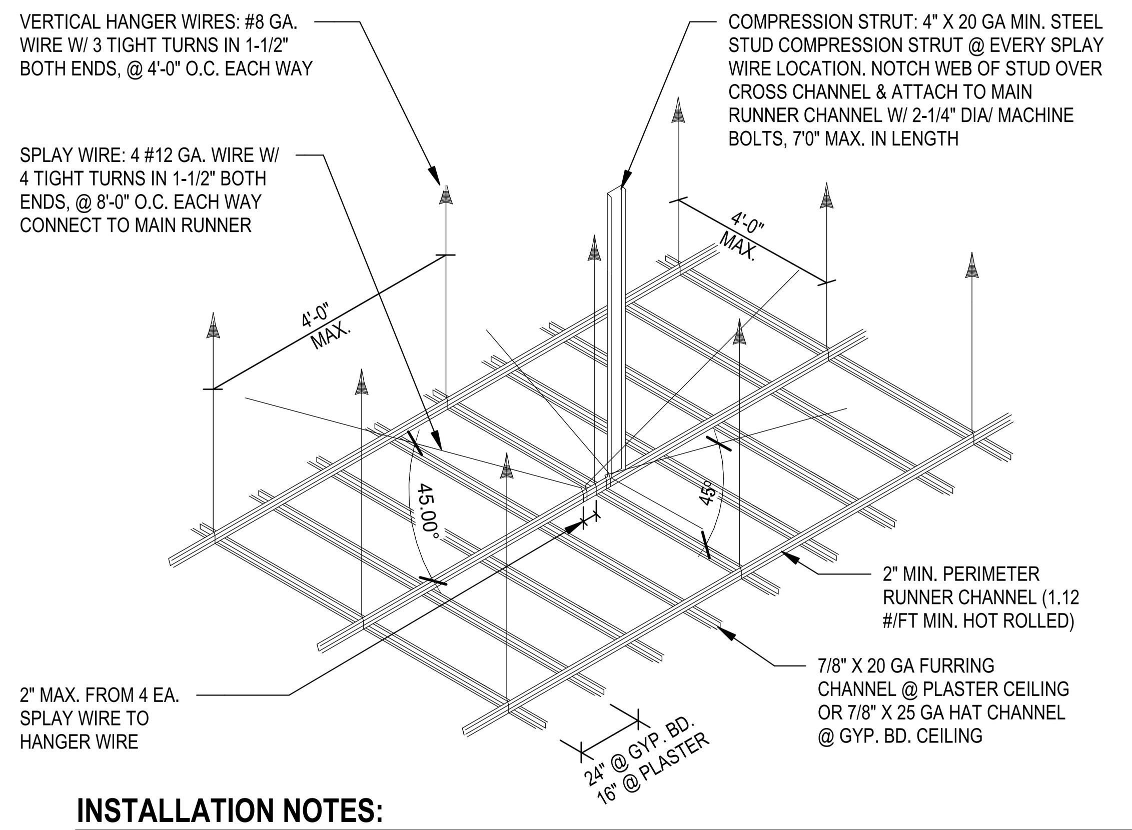

NOTE: THE SUSPENDED CEILING LATERAL FORCE-BRACING MEMBERS SHALL BE LOCATED A MINIMUM OF 6 INCHES FROM ALL HORIZONTAL PIPING OR DUCT WORK THAT ARE NOT PROVIDED WITH BRACING RESTRAINTS FOR HORIZONTAL FORCES. CABLE TRAYS AND ELECTRICAL CONDUITS SHALL BE SUPPORTED INDEPENDENTLY OF THE CEILING

NOTES:
- FIXTURES LESS THAN 10 POUNDS, PROVIDE ONE #12 GAGE WIRE (MAY BE SLACK).
- FIXTURES 11 - 55 POUNDS, PROVIDE TWO #12 GAGE WIRES (MAY BE SLACK).
- FIXTURES 56 POUNDS OR MORE SHALL BE SUPPORTED DIRECTLY FROM THE STRUCTURE ABOVE WITHOUT USING THE CEILING SUSPENSION SYSTEM FOR DIRECT SUPPORT.
- PENDANT HUNG FIXTURES SHALL BE SUPPORTED DIRECTLY FROM THE STRUCTURE ABOVE USING #9 GAGE WIRE [CISCA]

NOTES:
A. THE WIDTH OF THE PERIMETER SUPPORTING CLOSURE ANGLE OR CHANNEL SHALL BE NOT LESS THAN 2.0 IN. UNLESS QUALIFIED PERIMETER SUPPORTING CLIPS ARE USED.
B. CLOSURE ANGLES OR CHANNELS SHALL BE SCREWED OR OTHERWISE POSITIVELY ATTACHED TO WALL STUDS OR OTHER SUPPORTING STRUCTURES. PERIMETER SUPPORTING CLIPS SHALL BE QUALIFIED IN ACCORDANCE WITH APPROVED TEST CRITERIA PER SECTION 13.2.5.
C. PERIMETER SUPPORTING CLIPS SHALL BE ATTACHED TO SUPPORTING CLOSURE ANGLE OR CHANNEL WITH A MINIMUM OF TWO SCREWS PER CLIP AND SHALL BE INSTALLED AROUND THE ENTIRE CEILING PERIMETER.
D. IN EACH ORTHOGONAL HORIZONTAL DIRECTION, ONE END OF THE CEILING GRID SHALL BE ATTACHED TO THE CLOSURE ANGLE, CHANNEL, OR PERIMETER SUPPORTING CLIP. THE OTHER END OF THE CEILING GIRD IN EACH HORIZONTAL DIRECTION SHALL HAVE A MINIMUM 0.75-IN CLEARANCE FROM THE WALL AND SHALL REST UPON AND BE FREE TO SLIDE ON A CLOSURE ANGLE, CHANNEL, OR PERIMETER SUPPORTING CLIP.
E. CEILING AREAS OVER 2500 FT.² MUST HAVE SEISMIC SEPARATION JOINTS OR FULL HEIGHT PARTITIONS.
F. CEILINGS WITHOUT RIGID BRACING MUST HAVE 2" OVERSIZE TRIM RINGS FOR SPRINKLERS AND OTHER CEILING PENETRATIONS.

INSTALLATION NOTES:

1. INSTALL METAL SUSPENSION SYSTEM FOR GYP. BD. CEILING SURFACES IN ACCORDANCE W/ CHAPTER 25A, PART 2-TITLE 24 CCR
2. GYPSUM BOARD CEILINGS SHALL NOT SUPPORT MATERIALS OR BUILDING COMPONENTS OTHER THAN GRILLS, LIGHT FIXTURES, SMALL ELECTRICAL CONDUIT, SMALL DUCTS AND THE LIKE. GYPSUM BOARD SHALL BE ONE LAYER OF 5/8" TYPE "X". U.N.O.
3. ALL SUCH COMPONENTS SHOULD BE SUPPORTED EITHER DIRECTLY FROM MAIN RUNNERS OR BY SUPPLEMENTAL FRAMING, WHICH IS SUPPORTED BY MAIN RUNNERS
4. NO VERTICAL LOADS OTHER THAN GYPSUM BOARD DEAD LOAD SHALL BE APPLIED TO CROSS-FURRING
5. 48" x 48" SPACING OF BOTH HANGERS AND RUNNERS ARE PERMISSIBLE.
   a. VERTICAL HANGER WIRES ARE No 8 GA. AND GALVANIZED HAT SECTIONS AT 48" MAX. O.C.
   b. MAIN RUNNERS ARE 1 1/2" CHANNELS, 1.12 LBS/FT MINIMUM, HOT ROLLED
   c. CROSS-FURRING MAY BE 7/8", 25 GA. GALVANIZED HAT SECTIONS AT 24" MAX. O.C.

   HANGERS SHALL BE SADDLE-TIED AROUND MAIN RUNNERS TO DEVELOP FULL STRENGTH OF HANGER
6. CROSS-FURRING SHALL BE SADDLE-TIED TO THE MAIN RUNNERS WITH ONE STRAND OF No 16 GA. OR TWO STRANDS OF No 18 GA. TIE WIRE
7. MAIN RUNNERS SHALL BE SPLICED BY LAPPING AND INTERLOCKING FLANGES 12" MIN. AND TYING NEAR EACH END WITH DOUBLE LOOPS OF Nº 16GA. WIRE
8. CROSS-FURRING SHALL BE SPLICED BY LAPPING AND INTERLOCKING THE PIECES 8" MIN. AND TYING NEAR EACH END WITH DOUBLE LOOPS OF No 16 GA. WIRE
9. RECESSED OR DROP-IN LIGHT FIXTURES SHALL BE SUPPORTED DIRECTLY BY MAIN RUNNERS OR BY SUPPLEMENTAL FRAMING WHICH IS SUPPORTED BY MAIN RUNNERS
10. SURFACE MOUNTED FIXTURES SHALL BE ATTACHED TO A MAIN RUNNER WITH A POSITIVE CLAMPING DEVICE MADE OF MATERIAL W/ A MINIMUM 14 GA. ROTATIONAL SPRING CATCHES DO NOT COMPLY.
11. SEISMIC BRACE
   a. USE #12 DIAG. WIRES SPACES (12' x 12') WITHIN 6'-0" OF WALLS. SEISMIC BRACE SHALL BE LOCATED AT INTERSECTION OF MAIN RUNNER & CROSS-FURRING MEMBER. PROVIDE CONNECTION BETWEEN DIAGONAL WIRES AND MAIN RUNNER TO PREVENT SLIPPING FOR A 200# APPROXIMATE SEISMIC LOAD. PROVIDE VERTICAL COMPRESSION STRUT @ EACH SET OF BRACING WIRES.
   b. AT ROOMS WITH AREAS LESS THAN 144 SF AND CEILING IS SURROUNDED ON FOUR SIDES BY WALLS CONSTRUCTED OF METAL STUDS & CONNECTS DIRECTLY TO STRUCTURE ABOVE & THE CEILING IS ATTACHED TO A MINIMUM OF TWO WALLS WITH MIN. 2" x 2" 16 GA. STEEL ANGLE COMPRESSION STRUTS ARE NOT REQUIRED. THIS EXCEPTION DOES NOT APPLY TO CEILING OF SOFFITS THAT ARE STEPPED OR OPEN ON ONE OR MORE SIDES, OR ABUT TO OTHER TYPES OF CEILING CONSTRUCTION. CEILING MAIN RUNNERS OR CROSS FURRING MEMBERS SHALL NOT BE LET INTO, NOR COME INTO CONTACT WITH CONCRETE OR MASONRY WALLS.
12. PROVIDE BRACING ASSEMBLIES AT LOCATIONS NOT MORE THAN 1/2 THE SPACINGS GIVEN ABOVE. FROM EACH PERIMETER WALL AND AT THE EDGE OF VERTICAL CEILING OFFSETS. THE SLOPE OF THESE WIRES SHALL NOT EXCEED 45 DEGREES FROM THE PLANE OF THE CEILING AND SHALL BE TAUT. SPLICES IN BRACING WIRES ARE NOT TO BE PERMITTED.
13. CEILING GRID MEMBERS MAY BE ATTACHED TO NOT MORE THAN TOW (2) ADJACENT WALLS. CEILING GRID MEMBERS SHALL BE AT LEAST 1/2" FREE OF OTHER WALLS. IF WALLS RUN DIAGONALLY TO CEILING GRID SYSTEM RUNNERS, ONE END OF MAIN AND CROSS RUNNERS SHOULD BE FREE, AND A MINIMUM OF 1/2" CLEAR OF ALL.
14. AT THE PERIMETER OF THE CEILING AREA WHERE MAIN OR CROSS RUNNERS ARE NOT CONNECTED TO THE ADJACENT WALL, PROVIDE INTERCONNECTION BETWEEN RUNNERS AT THE FREE END TO PREVENT LATERAL SPREADING W/ 2"x2"x16 GA. CONTINUOUS ANGLE. FASTEN TO THE WALL W/ #8 DRYWALL SCREWS.
15. FASTEN VERTICAL HANGER WIRES WITH NOT LESS THAN 3 TIGHT TURNS. FASTEN SPLAY BRACING WIRES WITH 4 TIGHT TURNS. MAKE ALL TIGHT TURNS WITHIN A DISTANCE OF 1 1/2".
16. SEPARATE CEILING HANGING & BRACING WIRES AT LEAST 6" FROM UNBRACED DUCTS, PIPES AND CONDUIT. IT IS ACCEPTABLE ATTACHING LIGHTWEIGHT ITEMS, SUCH AS SINGLE ELECTRICAL CONDUIT NOT EXCEEDING 3/4" NOMINAL DIAMETER TO HANGER WIRES USING CONNECTORS.
17. WHEN DRILLED-IN CONCRETE ANCHORS OR SHOT-IN ANCHORS ARE USED IN REINFORCED CONCRETE FOR HANGER WIRES, 1 OUT OF 10 MUST BE FIELD TESTED FOR 200 LB.. OF TENSION. WHEN DRILLED-IN CONCRETE ANCHORS ARE USED FOR BRACING WIRES, 1 OUT OF 2 MUST BE FIELD TESTED FOR 440 LB. OF TENSION. SHOT-IN ANCHOR IN CONCRETE ARE NOT PERMITTED FOR BRACING WIRES. IF ANY SHOT IN OR DRILLED IN ANCHOR FAILS, SEE SECTION 1923A.3.5, TITLE 24.
18. PROVIDE TRAPEZE OR OTHER SUPPLEMENTARY SUPPORT MEMBERS AT OBSTRUCTIONS TO TYPICAL H SPACING. PROVIDE ADDITIONAL HANGERS, STRUTS OR BRACES AS REQUIRED AT ALL CEILING BREAKS, SOFFITS, AND DISCONTINUOUS AREAS. HANGER WIRES THAT ARE MORE THAN 1 IN 6 OUT OF PLUMB ARE TO HAVE CONTINUOUS SLOPING WIRES.
19. COMPRESSION STRUTS: STEEL SECTION WITH L/R RATIO OF 200 MAX.. STARTING NOT MORE THAN 4'-0" FROM ADJACENT WALLS TO SUPPORT A TRIBUTARY AREA OF 144 SF. ATTACH TO MAIN RUNNER WITH 1/4" DIA. MACHINE BOLT &IN TO STRUCTURE ABOVE. COMPRESSION STRUT SHALL NOT REPLACE HANGER WIRE.

7 SUSPENDED T-BAR CEILING
Scale: 12" = 1'-0"

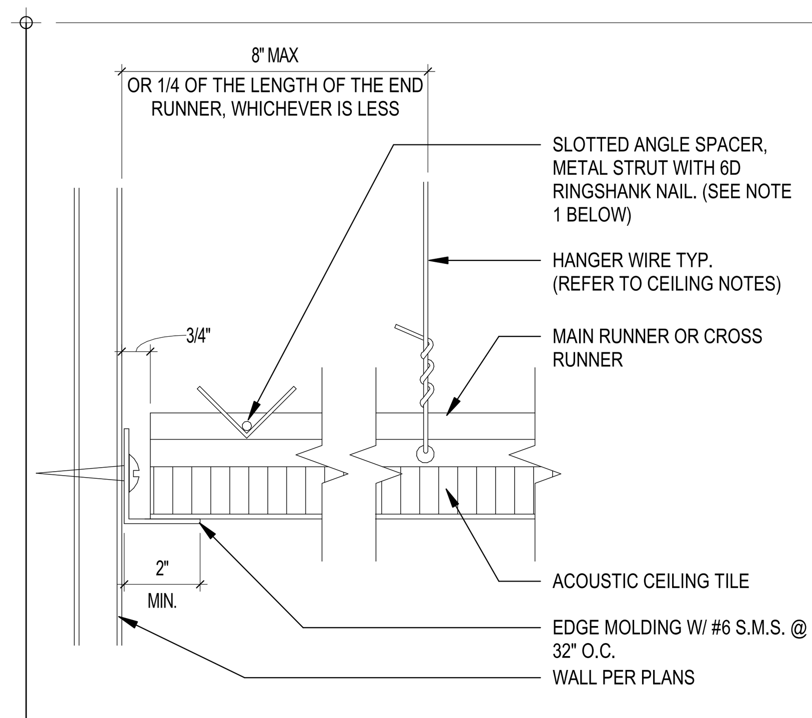

NOTE 1: NAILS AT THE END OF HORIZONTAL STRUTS ARE TO BE PLACED WITH NAIL HEAD TOWARD CENTERLINE OF SPAN OF STRUT.

4 PERIMETER SLIP JOINT @ T-BAR CEILING
Scale: 3" = 1'-0"

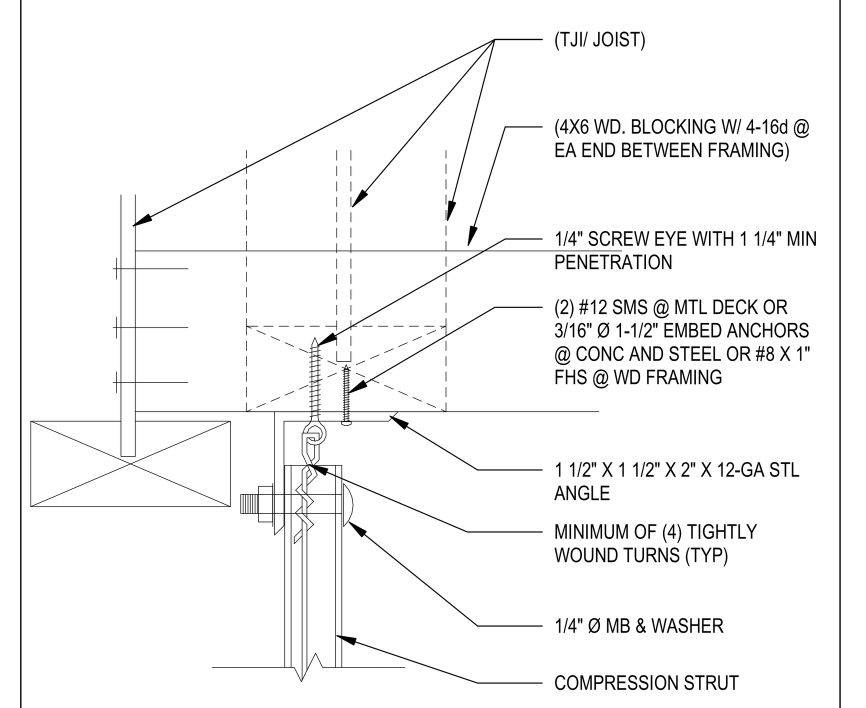

5 COMPRESSION STRUT
Scale: 6" = 1'-0"

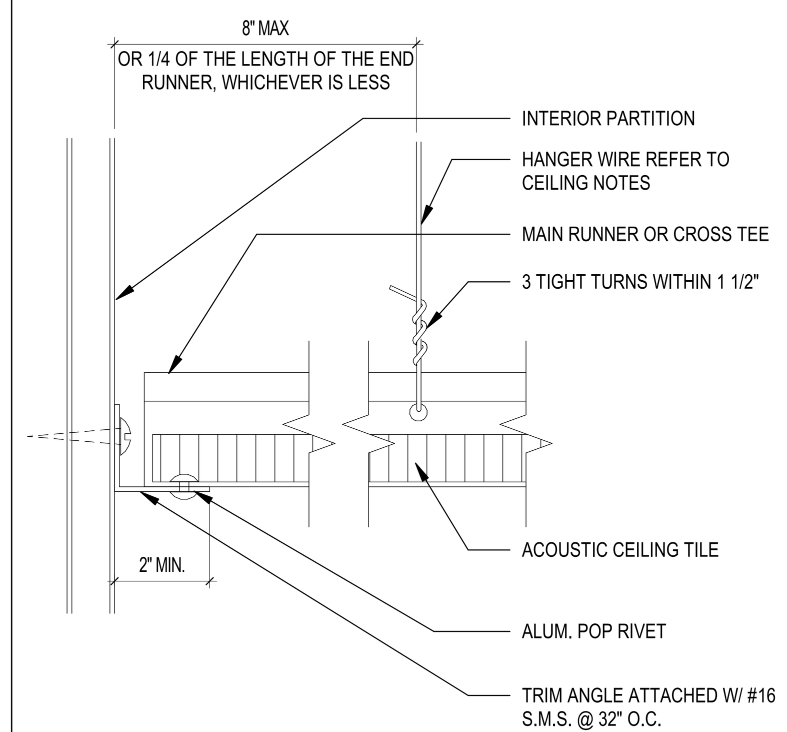

10 FIXED JOINT DETAIL @ T-BAR CEILING
Scale: 3" = 1'-0"

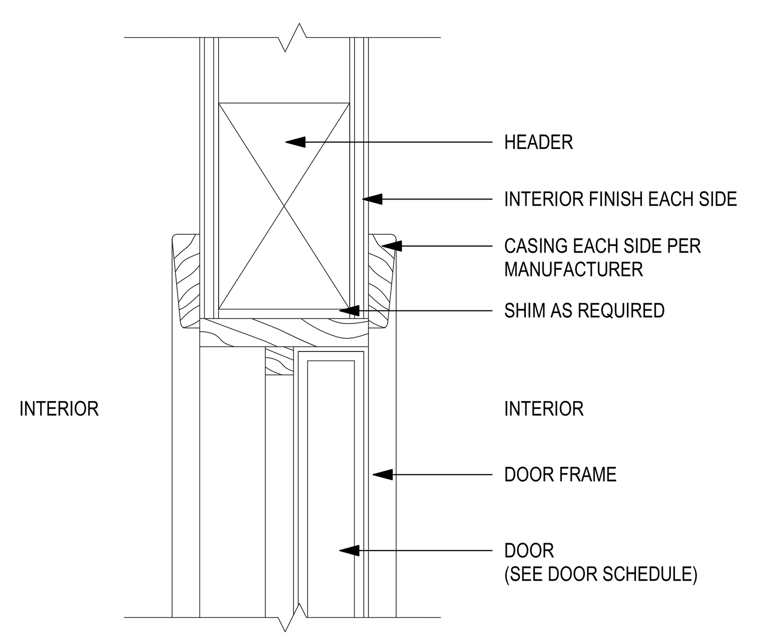

13 INT DOOR FRAME @ WOOD STUD WALL
Scale: 3" = 1'-0"

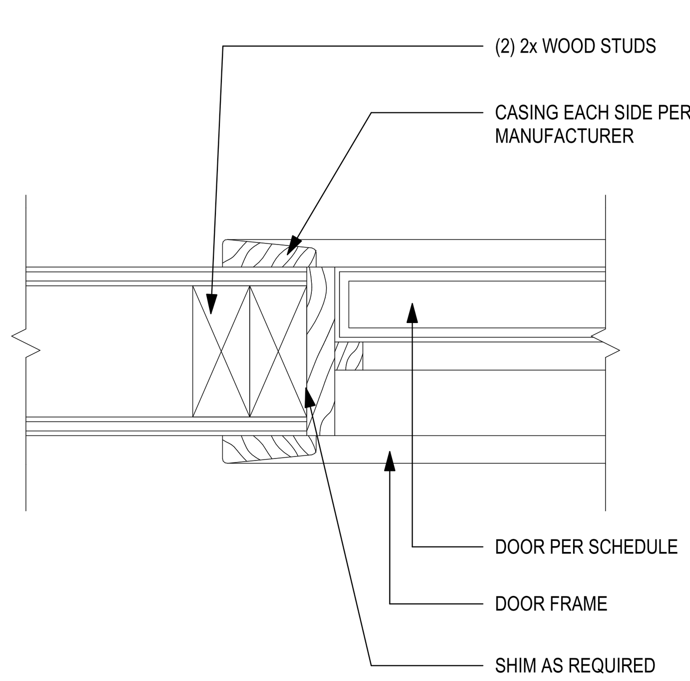

14 INT DOOR JAMB @ WOOD STUD WALL
Scale: 3" = 1'-0"

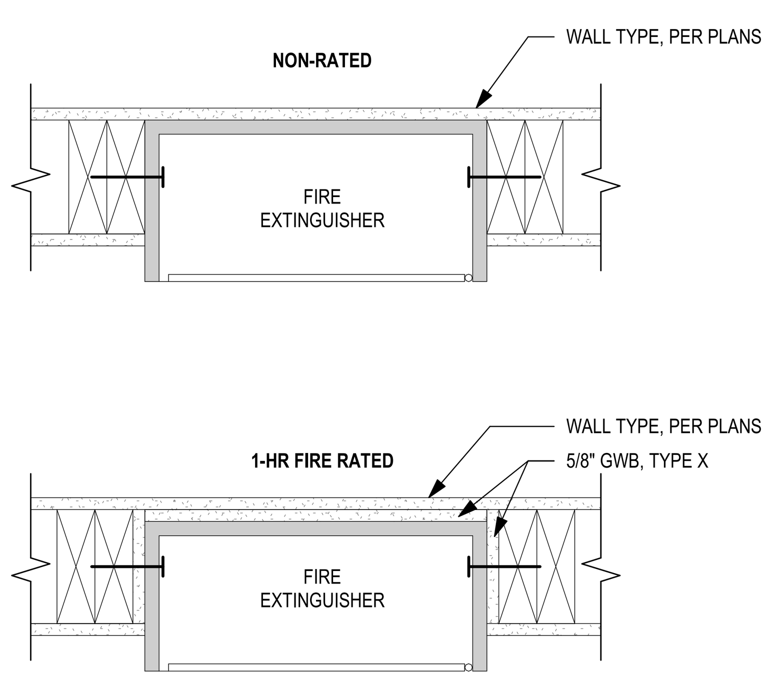

19 FIRE EXTINGUISHER
Scale: 1 1/2" = 1'-0"

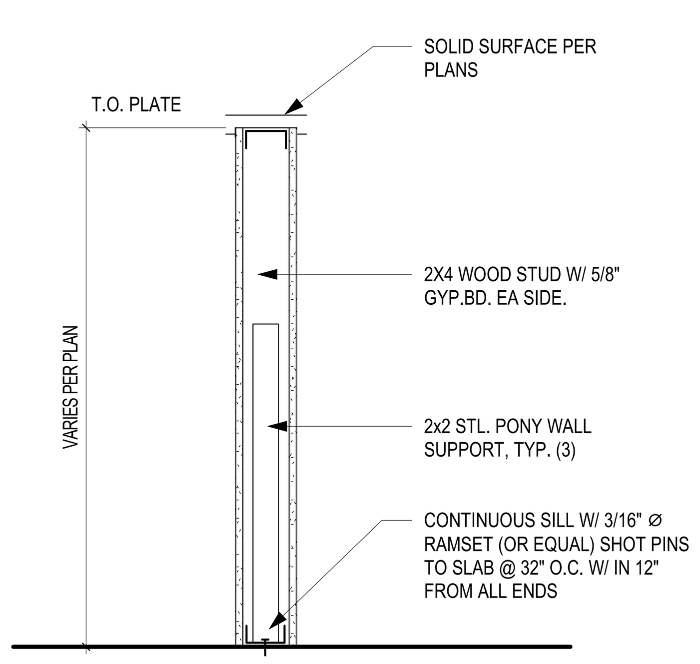

20 PONY WALL AT COUNTER SPACE
Scale: 1" = 1'-0"

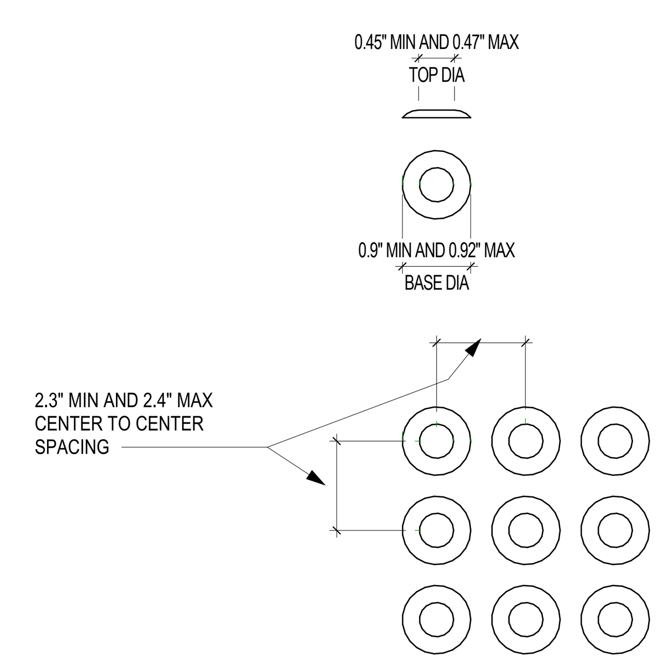

22 DETECTABLE WARNING SURFACE
Ref: A-601 / Scale: 6" = 1'-0"

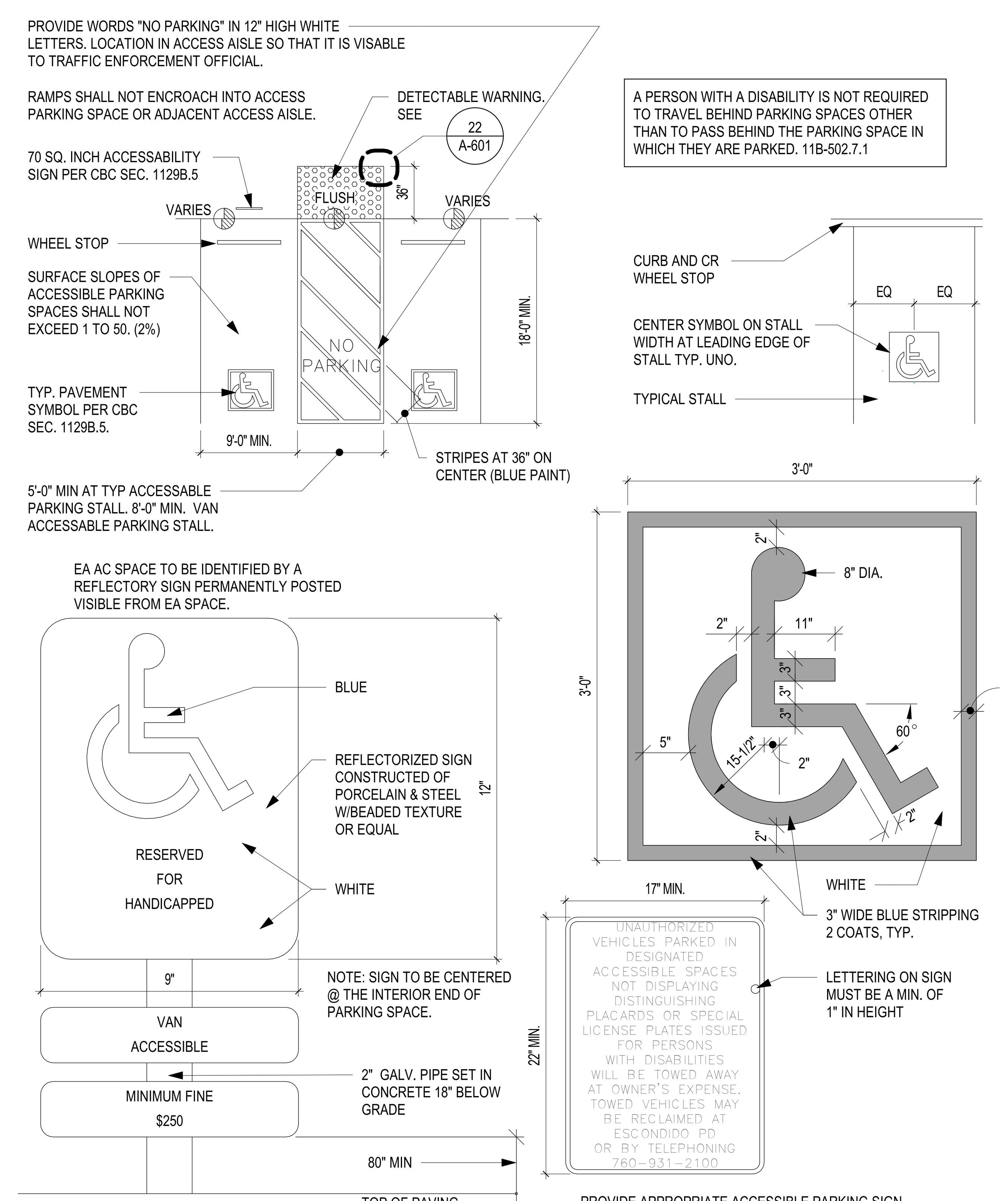

PROVIDE APPROPRIATE ACCESSIBLE PARKING SIGN AT EACH ENTRY TO PARKING LOT PER CBC.

23 ADA PARKING
Ref: A-102 / Scale: 3/8" = 1'-0"

NOAA group architects
4990 N Harbor Drive, Ste 201
San Diego, CA 92106
tel: 619-297-8066
web: www.noaainc.com

LICENSED ARCHITECT DANUBE TALANI No. C38946 REN 11/30/2023 STATE OF CALIFORNIA

DO NOT SCALE DRAWINGS. ANY DISCREPANCIES TO BE REVIEWED WITH THE ARCHITECT.

SAN DIEGO FAMILY DERMATOLOGY
222 W. MADISON AVENUE
EL CAJON, CA 92020

REVISION SCHEDULE

Nº	DATE	ISSUE
1	07/06/2023	1ST CITY REVIEW
2	08/22/2023	2ND CITY REVIEW

Project No:	BP-2023-0267
Project Start Date:	Issue Date
Drawn:	Designer
Checked:	Checker
Revision:	

Sheet Name:

DETAILS

Scale: As indicated

Sheet No:

A-601

8/25/2023 10:51:51 AM

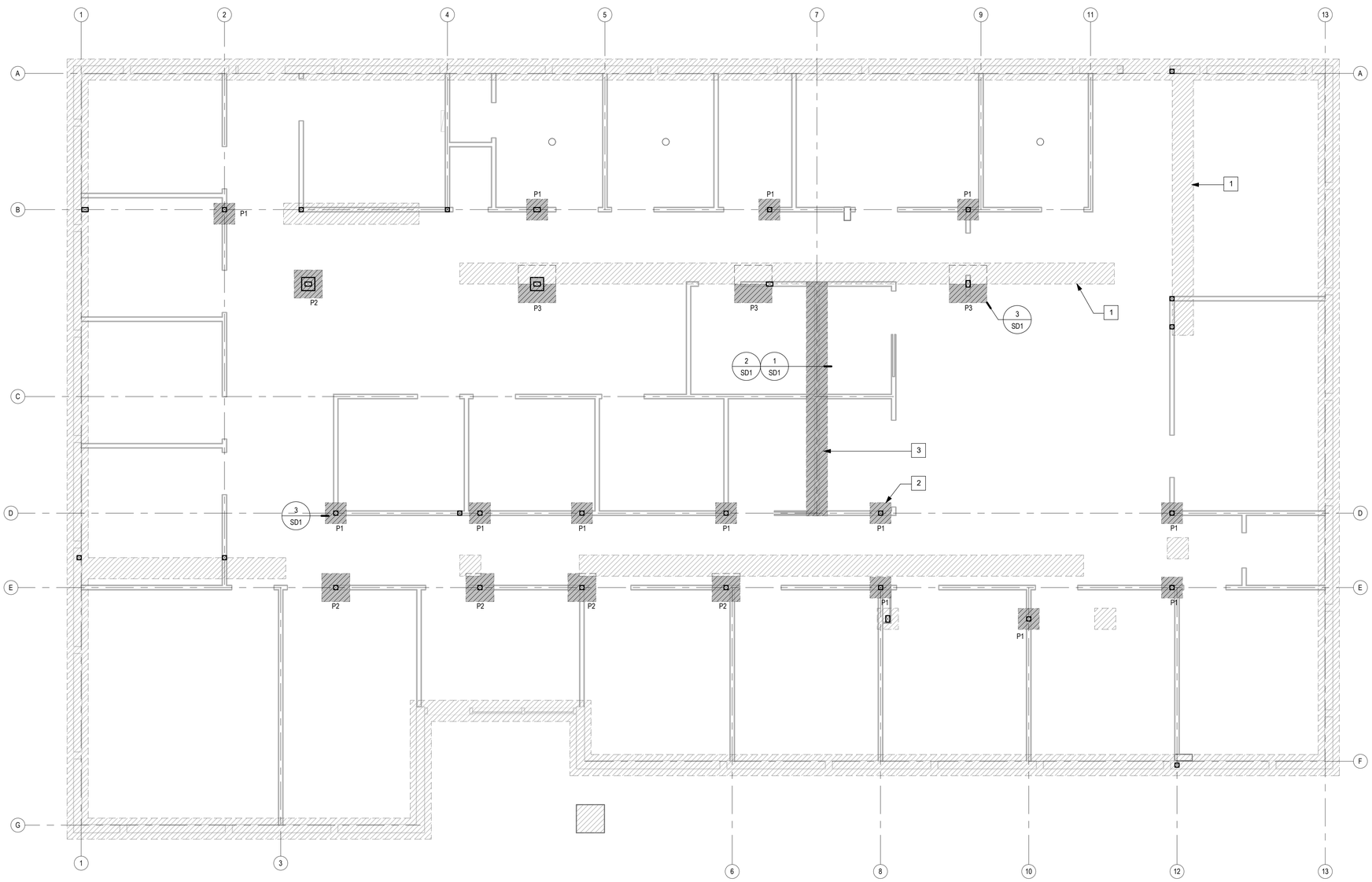

1 **FOUNDATION PLAN**
Ref: A-201 / Scale: 1/4" = 1'-0"

STRUCTURAL LEGEND

EXISTING FOUNDATION

NEW FOUNDATION

CONCRETE PAD LEGEND

P1 = 18" SQ.FT. X 18" THICK W/ (3) #4 EA. WAY

P2 = 24" SQ.FT. X 18" THICK W/ (3) #4 EA. WAY

P3 = 32" SQ.FT. X 18" THICK W/ (4) #4 EA. WAY

STRUCTURAL KEYNOTES

NOTE: GC TO PROVIDE SHORING AT ALL LOCATIONS OF REMOVED BEARING WALLS AND COLUMNS. FOR ANY QUESTIONS PLEASE CONTACT ARCHITECT PRIOR TO DEMO OF WALLS AND COLUMNS.

1. LOCATION OF PRESUMED EXISTING GRADE BEAMS. GC TO CONFIRM DEPTH AND WIDTH OF ANY GRADE BEAMS WHICH ARE REQUIRED TO BE SAWCUT FOR NEW PLUMBING, FOUNDATIONS, ETC. AND TO COORDINATE WITH ARCHITECT.
2. LOCATION OF NEW PAD FOOTINGS.
3. LOCATION OF NEW GRADE BEAM.

NOAA group architects
4990 N Harbor Drive, Ste 201
San Diego, CA 92106

tel: 619-297-8066
web: www.noaainc.com

LICENSED ARCHITECT
DANUBE TALANT
No. C38946
REN 11/30/2023
STATE OF CALIFORNIA

DO NOT SCALE DRAWINGS.
ANY DISCREPANCIES TO BE REVIEWED WITH THE ARCHITECT.

SAN DIEGO FAMILY DERMATOLOGY

222 W. MADISON AVENUE
EL CAJON, CA 92020

REGISTERED PROFESSIONAL ENGINEER
PAUL S. CHRISTENSON
C 057182
EXP. 12-31-23
CIVIL
STATE OF CALIFORNIA

REVISION SCHEDULE		
NO	DATE	ISSUE
△	--/--/--	DESCRIPTION

Project No: BP-2023-0267
Project Start Date: Issue Date
Drawn: Designer
Checked: Checker
Revision:
Sheet Name:

FOUNDATION PLAN

Scale: 1/4" = 1'-0"
Sheet No:

North: TRUE N PROJECT

S-1

7/25/2023 4:26:03 PM

STRUCTURAL NOTES

- REFER TO SHEET SN-1 FOR SHEAR WALL SCHEDULE.
- REFER TO SHEET SN-1 FOR STRUTURAL NOTES.
- REFER TO SHEET SD-1 FOR STRUTURAL DETAILS.

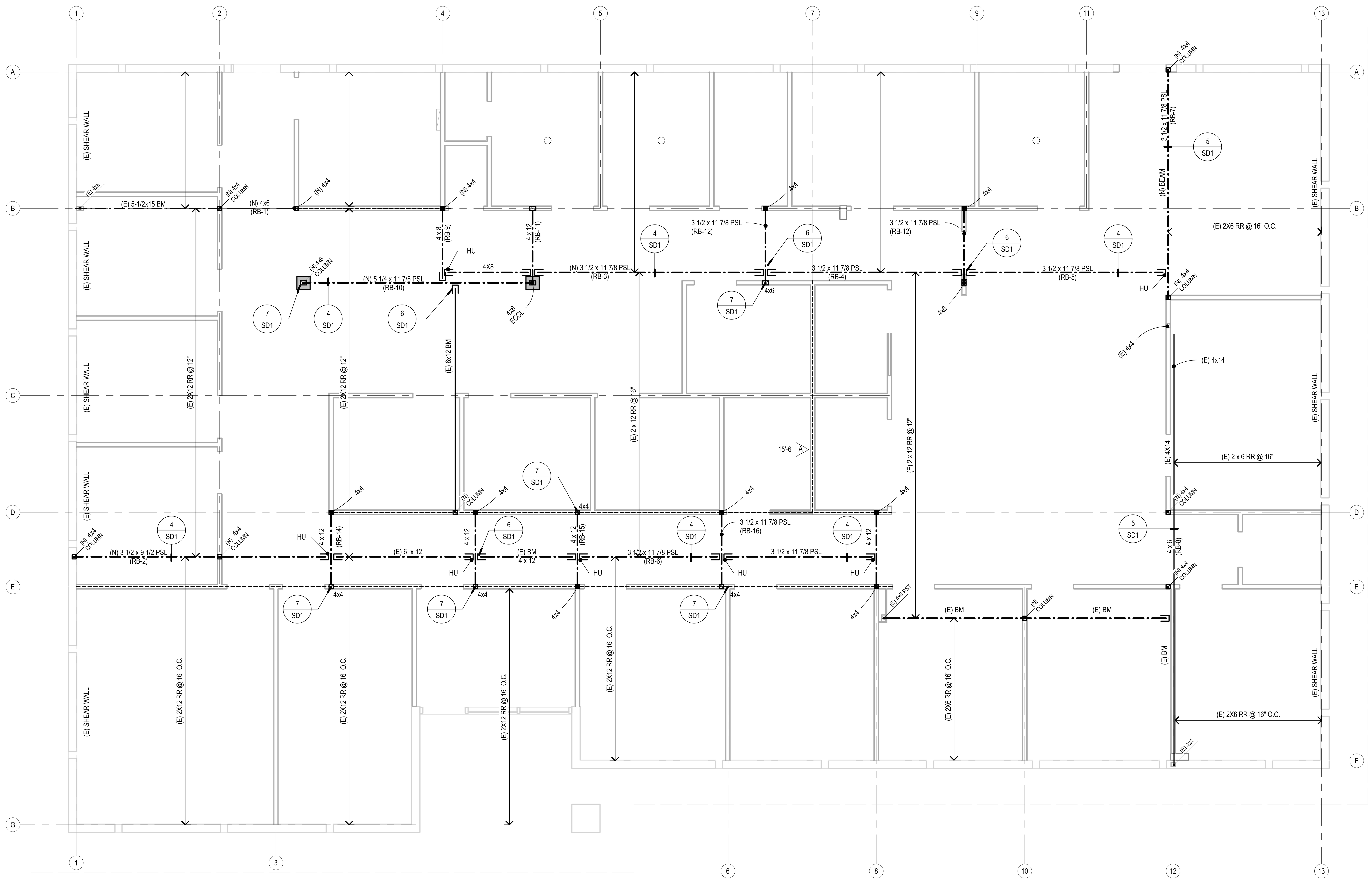

1 **FRAMING PLAN**
Ref: A-201 / Scale: 1/4" = 1'-0"

North: TRUE PROJECT

NOAA group architects
4990 N Harbor Drive, Ste 201
San Diego, CA 92106
tel: 619-297-8066
web: www.noaainc.com

LICENSED ARCHITECT DANUBE TALAN No. C38946 REN 11/30/2023 STATE OF CALIFORNIA

DO NOT SCALE DRAWINGS. ANY DISCREPANCIES TO BE REVIEWED WITH THE ARCHITECT.

SAN DIEGO FAMILY DERMATOLOGY

222 W. MADISON AVENUE
EL CAJON, CA 92020

REGISTERED PROFESSIONAL ENGINEER PAUL S. CHILSON C 057182 EXP 12-31-23 CIVIL STATE OF CALIFORNIA

REVISION SCHEDULE

NO	DATE	ISSUE DESCRIPTION
	--/--/--	DESCRIPTION

Project No:	BP-2023-0267
Project Start Date:	Issue Date
Drawn:	Designer
Checked:	Checker
Revision:	
Sheet Name:	

FRAMING PLAN

Scale:	1/4" = 1'-0"
Sheet No:	

S-2

7/25/2023 4:26:03 PM

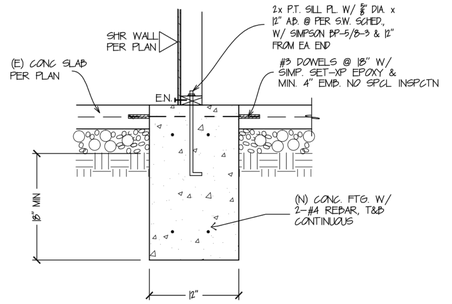

DETAIL 1

HOLDOWN SCHDULE

HOLDOWN	ANCHOR BOLT	POST SCREWS	MIN. POST SIZE	EMBEDMENT
HDU2	SSTB16	6-SDS 1/4"x2 1/2"	4x	12 5/8"
HDU4	SSTB20	10-SDS 1/4"x2 1/2"	4x	16 5/8"
HDU5	SSTB24	14-SDS 1/4"x2 1/2"	4x	20 5/8"
HDU8	SSTB28	20-SDS 1/4"x2 1/2"	4x	24 7/8"
HDU11	SB1x30	30-SDS 1/4"x2 1/2"	6x	24"
HDU14	PAB8	36-SDS 1/4"x2 1/2"	6x6	11 1/2"
HDU19	PAB10	(8) - 1" dia MB.	6x6	14 1/2"

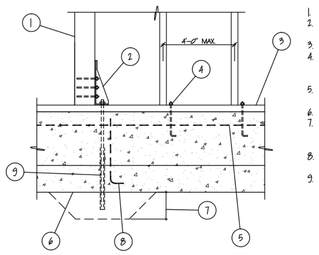

1. 4x/6x POST FACE.
2. HOLDOWN TYPE PER SHEAR WALL SCHEDULE.
3. 2x/3x BOTTOM PLATE.
4. ANCHOR BOLT SIZE AND SPACING PER SHEAR WALL SCHEDULE.
5. CONTINUOUS HORIZONTAL REINFORCING.
6. FOOTING - SEE PLAN.
7. INCREASE FOOTING DEPTH AS REQUIRED FOR FULL EMBEDMENT.
8. (2) #4 VERTICALS TO FOOTING AT EACH HOLDOWN LOCATION.
9. SIMPSON SSTB/PAB ANCHOR ANCHOR TO MATCH HOLDOWN CAPACITY.

DETAIL 2

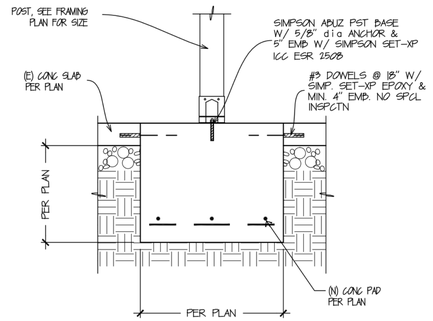

DETAIL 3

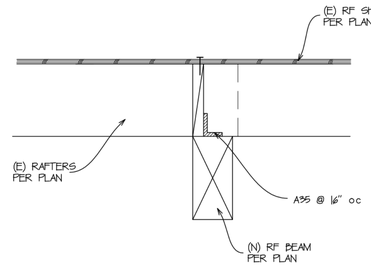

DETAIL 4

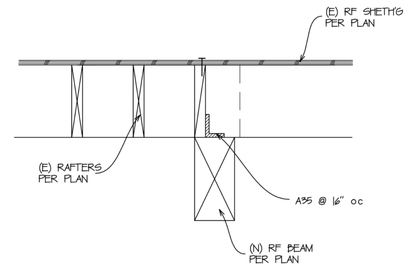

DETAIL 5

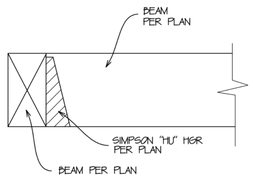

DETAIL 6

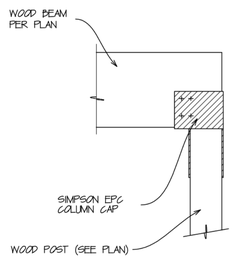

DETAIL 7

DETAIL 8

DETAIL 9

DETAIL 10

DETAIL 11

DETAIL 12

DETAIL 13

DETAIL 14

DETAIL 15

DETAIL 16

DETAIL 17

DETAIL 18

DETAIL 19

DETAIL 20

REVISIONS | BY

PCSD
Paul Christenson San Diego Engineering
Ph 760.207.1885
paul.pcsd@gmail.com

PROJECT:
San Diego Family Dermatology
222 W. Madison Avenue
El Cajon, CA 92020

DRAWING:
Details

JOB #: 23-173
FILE: SDDerm.dwg
DRAWN: PC
ENGINEER: PC
DATE: 4-25-23
SCALE: 1/4" = 1'-0"

THIS DRAWING IS NOT VALID FOR CONSTRUCTION UNLESS NOT STAMPED AND SIGNED BY PCSD ENGINEERING

STAMP

REGISTERED PROFESSIONAL ENGINEER
PAUL S. CHRISTENSON
No. C057182
EXP. 12-31-23
CIVIL
STATE OF CALIFORNIA

SD1

GENERAL

1) ALL DESIGN, CONSTRUCTION, AND WORKMANSHIP SHALL CONFORM TO:
2022 EDITION OF THE CALIFORNIA BUILDING CODE (CBC), AMERICAN SOCIETY OF CIVIL ENGINEERS (ASCE) 7-16, 2022 CALIFORNIA MECHANICAL CODE (CMC), 2022 CALIFORNIA PLUMBING CODE, AND ALL LOCAL ORDINANCES AND REQUIREMENTS.

2) THE APPROVED CONTRACT STRUCTURAL DRAWINGS AND SPECIFICATIONS REPRESENT THE FINISHED STRUCTURE. THEY DO NOT INDICATE THE METHOD OF CONSTRUCTION.

3) IT SHALL BE THE RESPONSIBILITY OF THE GENERAL CONTRACTOR TO PROVIDE ALL MEASURES NECESSARY TO PROTECT THE STRUCTURE DURING CONSTRUCTION. SUCH MEASURES SHALL INCLUDE, BUT ARE NOT LIMITED TO, BRACING AND SHORING FOR LOADS DUE TO CONSTRUCTION EQUIPMENT, ETC. THE METHODS, TECHNIQUES, SEQUENCES, PROCEDURES, SUPERVISION, AND INSTALLATION OF ALL TEMPORARY BRACING AND SHORING SHOULD ENSURE THE SAFETY OF THE WORK. BRACING AND SHORING IS TO BE INSTALLED PER THE LATEST OSHA STANDARDS. ALL BRACING AND/OR SHORING SHALL STAY IN PLACE UNTIL ALL WORK HAS BEEN SUITABLY COMPLETED.

4) THE GENERAL CONTRACTOR SHALL VERIFY ALL DIMENSIONS PRIOR TO STARTING CONSTRUCTION. THE ENGINEER SHALL BE NOTIFIED OF ANY DISCREPANCIES OR INCONSISTENCIES.

5) DIMENSIONS SHALL TAKE PRECEDENCE OVER SCALES ON DRAWINGS. NOTES AND DETAILS ON DRAWINGS SHALL TAKE PRECEDENCE OVER GENERAL NOTES AND TYPICAL DETAILS.

6) IT SHALL BE THE RESPONSIBILITY OF THE GENERAL CONTRACTOR TO ENSURE THAT ALL APPLICABLE SAFETY LAWS ARE STRICTLY ENFORCED AND TO MAINTAIN A SAFE CONSTRUCTION PROJECT.

7) IT SHALL BE THE RESPONSIBILITY OF THE GENERAL CONTRACTOR TO PROVIDE SUPERVISION OF THE CONSTRUCTION WORK TO ENSURE THAT IT IS BUILT IN CONFORMANCE WITH THE APPROVED PLANS AND SPECIFICATIONS. THE ENGINEER WILL PROVIDE ONLY OBSERVATION OF THE WORK DURING CONSTRUCTION.

8) THE APPROVED SET OF CONSTRUCTION DOCUMENTS, INCLUDING ALL APPROVED REVISIONS, SHALL BE PRESENT AT THE JOB SITE AT ALL TIMES.

9) CONSTRUCTION MATERIALS SHALL BE SPREAD OUT IF PLACED ON FRAMED FLOORS OR ROOFS. LOADS SHALL NOT EXCEED THE DESIGN LOADING FOR THE SUPPORTING MEMBERS.

10) NO CHANGES IN THE PLANS WILL BE MADE AND NO EXTRA WORK PERFORMED UNLESS SO APPROVED BY THE OWNER, CIVIL/STRUCTURAL ENGINEER, SOILS ENGINEER/GEOLOGISTS, COUNTY/CITY INSPECTOR AND BUILDING OFFICIALS.

11) A CLAIM FOR EXTRAS WILL BE CONSIDERED IF A CONDITION ARISES WHICH WAS CHANGED BY DESIGN BY OTHERS, UNFORESEEN OR HAS NOT BEEN SHOWN ON THE PLANS. SUCH CLAIMS FOR EXTRAS WILL NOT BE ALLOWED UNLESS THE CONTRACTOR HAS NOTIFIED THE OWNER AND SUPERVISING ENGINEER IN WRITING, INCLUDING AN AGREED-TO REIMBURSEMENT SCHEDULE, PRIOR TO PERFORMING THE EXTRA WORK.

INTENT OF THE DOCUMENTS

IT IS THE INTENT OF THE DRAWINGS AND THE SPECIFICATIONS TO REQUIRE THE COMPLETION OF THE WORK IN A THOROUGH AND WORKMANLIKE MANNER IN EVERY RESPECT.

DESCRIPTION OF WORK

THE CONTRACTOR SHALL FURNISH PERMITS, LICENSES, FEES, MATERIAL, LABOR, TOOLS, PLANT, SUPPLIES, EQUIPMENT, TRANSPORTATION, SUPERINTENDENCE, TEMPORARY CONSTRUCTION OF EVERY NATURE, INSURANCE, TAXES, CONTRIBUTIONS, AND ALL OTHER SERVICES AND FACILITIES, UNLESS SPECIFICALLY EXCEPTED NECESSARY TO COMPLETE THIS PROJECT.

LIABILITY AND COMPENSATION INSURANCE

THE CONTRACTOR SHALL MAINTAIN AT ALL TIMES, FULL AND UNLIMITED WORKMEN'S COMPENSATION INSURANCE IN ACCORDANCE WITH THE LABOR CODE OF THE STATE OF CALIFORNIA, AND SHALL CARRY PUBLIC CONTINGENT LIABILITY OF INSURANCE, IN AMOUNTS SATISFACTORY TO AND IN COMPANIES SELECTED WITH THE CONSENT OF THE OWNER.

PERMITS

THE CONTRACTOR SHALL OBTAIN THE BUILDING PERMIT, AND ALL OTHER CERTIFICATIONS, INSPECTION REPORTS, RELEASES, JURISDICTIONAL SETTLEMENTS, NOTICES, RECEIPTS FOR FEE PAYMENTS, JUDGMENTS, AND SIMILAR DOCUMENTS, CORRESPONDENCE AND RECORDS IN COLLECTION.

SUBCONTRACTOR'S STATUS

EVERY ITEM MENTIONED IN THE SPECIFICATIONS IS INTENDED TO REPRESENT THE QUALITY OF MATERIALS THAT WILL BE DEMANDED. SHOULD THE SUBCONTRACTOR WISH TO SUGGEST ANY SUBSTITUTES THAT HE CONSIDERS EQUAL IN VALUE AND EFFICIENCY WITH THE ONE SPECIFIED, HE SHALL STATE WHAT THE ITEM SUGGESTED IS, AND THE DIFFERENCE IN COST, IF ANY.

IF SUBSTITUTES OF MATERIALS (EQUALLY GOOD) ARE OFFERED AT THE TIME BIDS ARE SUBMITTED, THEY WILL BE CONSIDERED. IN THE EVENT THE OWNER WISHES TO ACCEPT THE SUBSTITUTE, ARRANGEMENTS WILL BE MADE FOR THE CHANGE BEFORE ENTERING INTO A CONTRACT.

IF NO ITEMS ARE SUGGESTED AS A SUBSTITUTE AT THE TIME THE BIDS ARE SUBMITTED, THEN NO DEVIATION WILL BE ALLOWED FROM THE MATERIALS SPECIFIED WITHOUT FIRST SECURING THE APPROVAL OF THE OWNER.

WORKMAN SAFETY-EXCAVATIONS

ALL REGULATIONS OF THE STATE OR FEDERAL OSHA SHOULD BE FOLLOWED BEFORE ALLOWING WORKMEN IN A TRENCH OR OTHER EXCAVATION.

IF EXCAVATIONS ARE TO BE MADE DURING THE RAINY SEASON PARTICULAR CARE SHOULD BE GIVEN TO INSURE THAT BERMS OR OTHER DEVICES PREVENT SURFACE WATER FROM FLOWING OVER THE TOP OF THE EXCAVATION OR PONDING AT THE TOP OF THE EXCAVATIONS.

NO TRENCHES OR EXCAVATIONS SHALL BE 5' OR MORE IN DEPTH INTO WHICH A PERSON IS REQUIRED TO DESCEND, OR OBTAIN NECESSARY PERMIT FROM THE STATE OF CALIFORNIA DIVISION OF INDUSTRIAL SAFETY PRIOR TO ISSUANCE OF A BUILDING OR GRADING PERMIT.

WRAP AND PROTECT ALL UTILITY LINES IN WAY OF CONSTRUCTION PER STANDARD CONSTRUCTION PRACTICES

TIMBER

1) ALL TIMBER DESIGN AND CONSTRUCTION SHALL BE PER 2022 CBC CHAPTER 23 AND 2018 NATIONAL DESIGN SPECIFICATION (NDS). ALL SAWN LUMBER SHALL BE GRADED BY EITHER WWPA OR WCLIB.

2) U.N.O., ALL WOOD SILL PLATES AND LEDGERS BEARING ON CONCRETE OR MASONRY SHALL BE PRESSURE TREATED DOUGLAS FIR-LARCH. ANCHOR BOLTS SHALL BE 5/8" DIAMETER SPACED A MAXIMUM 4'-0" o.c. AND WITHIN 12" AND GREATER THAN SEVEN BOLT DIAMETERS FROM: EACH END OF A SILL, FROM A HOLE, OR FROM A NOTCH GREATER THAN 1/3 THE WIDTH OF THE SILL. SEE SHEARWALL SCHEDULE FOR OTHER REQUIREMENTS.

3) ALL WALL BRACING AND MATCHING OF STUDS SHALL CONFORM TO SECTION 2308.9.3 OF THE 2016 CALIFORNIA BUILDING CODE.

4) UNLESS NOTED OTHERWISE ON FRAMING PLANS:

ROOF SHEATHING SHALL BE 15/32" CDX APA-RATED SHEATHING, EXPOSURE 1, MIN. SPAN RATING 24/0, NAILED WITH 8d COMMON @ 6"o.c. EDGES & BOUNDARIES AND 12"o.c AT INTERMEDIATE FRAMING MEMBERS.

FLOOR SHEATHING SHALL BE 23/32" CDX APA-RATED STURD-I-FLOOR, T&G, EXPOSURE 1, MIN. SPAN RATING 20" o.c., NAILED WITH 10d COMMON @ 6"o.c. AT EDGES & BOUNDARIES AND 12"o.c. AT INTERMEDIATE FRAMING MEMBERS

SHEARWALL SHEATHING SHALL BE APA "STRUCTURAL I" RATED, EXPOSURE 1, GROUP 1. NAILING PER SHEARWALL SCHEDULE.

ALL WOOD STRUCTURAL PANEL SHEATHING SHALL BE GRADE MARKED BY APA, T.E.C.O., OR P.T.L. AND SHALL CONFORM TO PS 1-95, PS 2-92, OR PRP-108..

TRASH 'REMOVAL

THE CONTRACTOR SHALL PROMPTLY REMOVE FROM THE BUILDING, LOT, SIDEWALKS, AND STREETS - ALL RUBBISH AND DIRT, AS IT ACCUMULATES, DUE TO THE WORK DONE UNDER THIS CONTRACT.

ALL COMBUSTIBLE DEBRIS SHALL BE REMOVED FROM THE BUILDING ON A DAILY BASIS.

FOUNDATION

1) CONCRETE SHALL HAVE A MINIMUM ULTIMATE COMPRESSIVE STRENGTH OF 2500 PSI AT 28 DAYS FOR POURED-IN-PLACE CONTINUOUS AND SPREAD FOOTINGS, AND 3000 PSI (SPECIAL INSP. REQ'D) AT 28 DAYS FOR GRADE BEAMS.

2) PORTLAND CEMENT SHALL BE TYPE I PER ASTM C 150. AGGREGRATES SHALL BE PER ASTM C33 WITH MAXIMUM SIZE OF 1 1/2" FOR FOOTINGS AND 1" FOR ALL OTHER WORK.

3) REINFORCING STEEL SHALL BE ASTM A615, GRADE 60, CLEAN AND RUST FREE. LAPS AT SPLICES AND POUR LINES TO BE 40 BAR DIAMETERS (2'-0" MINIMUM) UNLESS NOTED OTHERWISE ON PLANS.

4) U.N.O., SLABS ON GRADE SHALL BE 4" THICK WITH #3 BARS @ 16" o.c. EACH WAY WITH 2 INCH COVER AT BOTTOM. 4" CLEAN SAND SHALL BE PLACED BELOW THE SLAB WITH A 10 MIL PLASTIC VAPOR BARRIER PER ASTM E96 & ASTM E1745 PLACED AT MID-HEIGHT. BARS SHALL BE LAPPED 20". SEE SOILS REPORT (IF AVAILABLE) FOR OTHER REQUIREMENTS.

5) ALL NEW SILL PLATE ANCHOR BOLTS TO BE INSTALLED IN FRESH CONCRETE SHALL BE 5/8" DIAMETER A307 "L" BOLTS SPACED PER PLAN AND SHEARWALL SCHEDULE WITH MINIMUM 7" EMBEDMENT. MAXIMUM ANCHOR BOLT SPACING SHALL BE 4'-0" o.c. ANCHOR BOLTS AT ENDS OF WALL PANELS SHALL BE LOCATED WITHIN 12" AND GREATER THAN 7 BOLT DIAMETERS FROM THE END OF SILL PLATE. THERE SHALL BE A MINIMUM OF TWO ANCHOR BOLTS PER WALL PANEL. (ANCHOR BOLTS TO EXISTING FOOTINGS PER NOTE #13 BELOW). PLATE WASHERS A MINIMUM 3"X3"X0.229" THICK SHALL BE USED ON EACH BOLT. ALL CONNECTORS AND METAL HARDWARE IN CONTACT WITH PRESSURE TREATED TIMBER SHALL HAVE CORROSION RESISTANT COATINGS OR PROTECTION, SUCH AS "ZMAX", HOT DIPPED GALVANIZED, OR BE STAINLESS STEEL.

6) IF NO SOILS REPORT IS PROVIDED, ASSUMED ALLOWABLE SOIL BEARING PRESSURE (ASBP) SHALL BE 1500 PSF (PER SOIL SITE CLASS D) & EMBED FOOTINGS A MINIMUM OF 12" INTO COMPETENT SOIL.

7) REINFORCEMENT CLEARANCES FOR FOOTINGS AND GRADE BEAMS, (U.N.O.):
A) POURED AGAINST EARTH - 3"
B) FORMED SURFACE - 2"

8) REMOVAL OF FORMS:
A) SUPPORTING VERTICAL SURFACES - 2 DAYS MINIMUM
B) SUPPORTING BEAMS & GIRDERS - 15 DAYS MINIMUM

9) REINFORCING SHALL BE CONTINUOUS AROUND CORNERS AND THROUGH INTERSECTIONS.

10) DOWEL ANY NEW FOOTINGS TO EXISTING FOOTINGS WITH (2) #4 x 2'-0" BARS TOP AND BOTTOM WITH 6" EMBEDMENT IN 1 1/2" DIAMETER CORED HOLES IN APPROVED NON-SHRINK GROUT MATERIAL (e.g. EMBECO 636, POR-ROK, etc.).

11) ALL HOLD DOWNS INTO EXISTING FOOTINGS TO BE INSTALLED WITH SIMPSON SET-XP ADHESIVE EPOXY, ICC-ESR-2508/LARR#25279. CONTRACTOR TO INSTALL PER MANUFACTURER'S SPECIFICATIONS AND OBTAIN DEPUTY INSPECTOR.

12) UNLESS NOTED OTHERWISE, DOWEL ANY NEW SLABS TO EXISTING FOOTINGS WITH (1)-#4 x 2'-0" BARS SPACED @ 36" O.C. WITH 6" EMBEDMENT IN 5/8" DIAMETER CORED HOLES IN SIMPSON SET-XP EPOXY (ICBO. ICC-ESR-2508 / LARR# 25279).

13) ALL NEW SILL PLATE ANCHOR BOLTS TO BE INSTALLED INTO EXISTING FOOTINGS SHALL BE SIMPSON TITAN HD ANCHOR (ICC-ES-ESER-1056/LARR# 25560)

14) CONSTRUCTION JOINTS SHALL BE PREPARED BY WIRE BRUSHING, CLEANING AND BRUSHING IN A PASTE OF NEAT CEMENT MORTAR IMMEDIATELY PRIOR TO POURING. LOCATION OF CONSTRUCTION JOINT SHALL BE APPROVED BY THE PROJECT STRUCTURAL ENGINEER.

15) ALL CONNECTORS AND METAL HARDWARE IN CONTACT WITH PRESSURE TREATED TIMBER SHALL HAVE CORROSION RESISTANT COATINGS OR PROTECTION, SUCH AS "ZMAX", HOT DIPPED GALVANIZED, OR BE STAINLESS STEEL.

16) PRIOR TO POURING INTERIOR CONCRETE FLOOR SLABS, ALL SOIL BELOW FLOOR SHALL BE COMPACTED TO REQUIRED DENSITY AND MOISTENED TO A DEPTH NOT LESS THAN 18" OR PER SOILS REPORT.

17) DEEPEN NEW FOOTINGS AS NECESSARY TO OBTAIN REQUIRED EMBEDMENT FOR ALL NEW HOLD DOWN BOLTS. ALL HOLD DOWN BOLTS TO HAVE A MINIMUM OF 3" OF CONCRETE COVER TO SOIL @ BOTTOM.

FRAMING

ROOF DIAPHRAGM

15/32" APA RATED SHEATHING (MIN.), EXPOSURE 1, 24/0 MAX. SPAN RATING, w/ 8d COMMON NAILS @ 6"o.c. AT BOUNDARY & PANEL EDGE NAILING (E.N.), AND 12" o.c. AT INTERMEDIATE FRAMING MEMBERS

FLOOR DIAPHRAGM

23/32" APA STURD-I-FLOOR, EXPOSURE 1, TONGUE AND GROOVE, w/
10d COMMON NAILS @ 6" o.c. AT BOUNDARY & PANEL EDGE NAILING (E.N.), AND 12" o.c. AT INTERMEDIATE FRAMING MEMBERS

FRAMING

* BUILT-UP WOOD FRAMING MEMBERS MAY NOT BE SUBSTITUTED FOR 4x AND WIDER BEAMS UNLESS NOTED BY ENGINEER
* ALL (2) 2x ROOF & FLOOR FRAMING TO HAVE MIN. 16d AT 12" O.C. T&B, STAGGERED
* ALL (3) 2x FRAMING TO HAVE MIN. 1/2" DIAMETER BOLTS AT 18" O.C. T&B, STAGGERED
* 2x SOLID BLOCKING REQUIRED AT POINTS OF SUPPORT FOR ALL HORIZONTAL FRAMING MEMBERS. IN ADDITION, ALL 2x10 AND LARGER MEMBERS SHALL HAVE SOLID FULL DEPTH BLOCKING OR BRIDGING AT MAX. 8'-0" o.c.
* ALL WOOD POSTS AT UPPER FLOORS TO CONTINUE TO BEAM OR FOUNDATION
* UNLESS DETAILED OTHERWISE, ALL RIDGE / HIP / VALLEY CONNECTIONS TO HAVE A SIMPSON A35 CONNECTOR AT EACH CORNER WITH A 2x KICKER TO BEARING WALL
* ALL NEW TO EXISTING TOP PLATES TO HAVE SIMPSON ST6236 STRAP
* AT ROOF-TO-WALL FRAMING, PROVIDE A35 FRAMING ANCHORS PER SHEARWALL SCHEDULE OR AT MAX. 48" O.C. FROM PLATES TO RAFTERS AND RAFTER BLOCKING AROUND PERIMETER OF BUILDING AND AT DRAG LINES AS INDICATED ON PLANS (SEE PLANS WHERE OTHER REQUIREMENTS MAY OCCUR)
* AT FIRST FLOOR AND SUBTERRANEAN LEVEL PROVIDE A35'S PER SHEARWALL SCHEDULE OR AT 32" O.C. MAX. FROM PLATES TO FLOOR JOISTS AND BLOCKING AROUND PERIMETER OF BUILDING AND AT DRAG LINES AS INDICATED ON PLANS (SEE PLANS WHERE OTHER REQUIREMENTS MAY OCCUR)
* PROVIDE DOUBLE JOISTS UNDER ALL PARALLEL WALLS, U.N.O.
* WHEN SHEAR WALLS ARE SUPPORTED BY WOOD JOISTS THAT ARE PERPENDICULAR TO THE SHEAR WALL, ATTACH SOLID 4x BLOCKING UNDER SHEAR WALLS BETWEEN JOISTS. PROVIDE 2x SOLID BLOCKING UNDER NON-SHEAR WALLS PERPENDICULAR TO FLOOR JOISTS. SEE PLANS AND DETAILS FOR ANY ADDITIONAL REQUIREMENTS.
* ATTACH MIN. 2x SOLID BLOCKING AND EDGE NAIL THE PERIMETER OF ALL OPENINGS OVER 10" IN WIDTH OR LENGTH IN ALL SHEAR PANELS AND DIAPHRAGMS. SEE DETAILS WHERE OTHER REQUIREMENTS MAY OCCUR.
* PROVIDE A MINIMUM 3x4 OR 2x6 @ 16" FOR ALL STUD WALLS SUPPORTING TWO OR THREE FLOORS WITH 10' MAX PLATE HEIGHTS.
* ALL CONNECTORS AND METAL HARDWARE IN CONTACT WITH PRESSURE TREATED TIMBER SHALL HAVE CORROSION RESISTANT COATINGS OR PROTECTION, SUCH AS "ZMAX", HOT DIPPED GALVANIZED, OR BE STAINLESS STEEL.

REINFORCING STEEL

ALL PRIMARY REINFORCEMENT SHALL CONFORM TO A.S.T.M. A- 615, GRADE 60 K.S.I. STEEL.

ALL TIES AND STIRRUPS SHALL CONFORM TO A.S.T.M. A-615, GRADE 40 K.S.I. STEEL.

SPLICES OF REINFORCING SHALL BE LAPPED A MINIMUM OF 40 BAR DIAMETERS UNLESS SPECIFIED ON PLANS AND SECURELY WIRED TOGETHER, USING A MINIMUM OF 16 GA. WIRE. SPLICES OF ADJACENT REINFORCING BARS SHALL BE STAGGERED WHEREVER POSSIBLE.

TIMBER (CONTINUED)

5) HORIZONTAL WOOD STRUCTURAL PANELS SHALL BE LAID WITH THE LONG DIMENSION AND FACE GRAIN PERPENDICULAR TO THE RAFTERS OR JOISTS, AND THE SHEETS SHALL BE STAGGERED AS SHOWN IN 2019 CBC TABLE 2306.2.2 (CASES 1 AND 3). EACH SHEET SHALL CONTAIN A MINIMUM OF 8 SQUARE FEET AND EXTEND TO 3 SUPPORTS. 1/8" SPACING BETWEEN PANEL ENDS AND EDGES IS REQUIRED. ALL WOOD STRUCTURAL PANEL DIAPHRAGMS SHALL BE REVIEWED BY CONTRACTOR FOR COMPLIANCE WITH NAILING AND PANEL REQUIREMENTS BEFORE FINISH IS APPLIED.

6) U.N.O., ALL 2x ROOF RAFTER AND FLOOR JOIST FRAMING MEMBERS SHALL BE MINIMUM GRADE DOUGLAS FIR-LARCH NO. 2 OR BETTER. ALL BEAMS, HEADERS, AND POSTS SHALL BE MINIMUM DOUGLAS FIR-LARCH NO. 1 OR BETTER. ALL VERTICAL WALL FRAMING MEMBERS SHALL BE DOUGLAS FIR -LARCH NO. 2 OR BETTER.

7) ALL PSL AND LVL ENGINEERED FRAMING MEMBERS SHOWN ON PLANS TO BE 2.2E PARALLAM (E=2200 ksi) AND 1.9E MICROLAM BEAMS (E=1900 ksi), RESPECTIVELY, AS DESCRIBED IN ICC-ES-ESR-1153 & ICC-ES-ESR-1387. ALL WOOD I-JOIST MEMBERS SHOWN ON PLANS TO BE AS DESCRIBED IN ESR-1153.

8) MOISTURE CONTENT OF SAWN LUMBER AT TIME OF INSTALLATION SHALL NOT EXCEED 19%.

9) ALL BOLT HEADS AND NUTS BEARING ON WOOD SHALL HAVE WASHERS. HOLES IN WOOD FOR BOLTS SHALL BE DRILLED MAX. 1/16" LARGER THAN NOMINAL BOLT SIZE.

10) NOTCHING OR DRILLING HOLES IN BEAMS OR JOISTS SHALL BE ONLY AS DETAILED PER ENGINEER AND SHALL COMPLY WITH 2019 CBC SECTION 2308.9.10 & 2308.9.11
11) ALL SAWN LUMBER (2x, 4x, 6x) RAFTERS, FLOOR JOISTS, AND BEAMS SHALL HAVE SOLID WOOD BLOCKING AT ALL POINTS OF SUPPORT. MEMBERS WITH NOMINAL DEPTH 10" OR GREATER SHALL HAVE 2x FULL DEPTH SOLID BLOCKING OR CROSS BRIDGING SPACED AT 8'-0" FOR MAXIMUM.

12) U.N.O., ALL FRAMING CONNECTION HARDWARE SHALL BE AS MANUFACTURED BY THE SIMPSON STRONG-TIE COMPANY AND SHALL BE REFERENCED AS SHOWN IN THEIR LATEST CATALOG. ALL CONNECTOR NAILS AND BOLTS SHALL BE AS DESIGNATED PER MANUFACTURER. ALTERNATE MANUFACTURER CONNECTOR HARDWARE MAY BE USED PROVIDED ENGINEER'S WRITTEN APPROVAL IS OBTAINED BY CONTRACTOR AND ICC APPROVAL IS PROVIDED.

13) TOP PLATES SHALL LAP LOWER PLATES AT CORNERS, AND BREAKS AT PLATE SHALL BE LAPPED A MINIMUM OF 4'-0", WITH 20-16d NAILS ON EACH SIDE.

14) ALL BEAMS SHALL BE SUPPORTED BY POSTS OR GIRDERS. FOR 4x8 AND SMALLER BEAMS A MINIMUM (2)-2X4 D.F. #2 POST SHALL BE USED, U.N.O. FOR 4x10 AND LARGER BEAMS A MINIMUM 4x4 D.F. #1 POST SHALL BE USED, U.N.O. ALL POSTS SHALL PROVIDE FULL BEARING WIDTH FOR THE BEAM, U.N.O.

15) ALL POSTS SHALL BE CONTINUED BETWEEN FLOORS WITH SOLID FULL WIDTH BLOCKING AND A POST OF EQUAL OR GREATER SIZE BELOW, UNTIL A BEAM OR FOUNDATION IS ENCOUNTERED. ALL POSTS INSIDE WALLS MAY BEAR ON THE SOLE OR SILL PLATE, U.N.O. ISOLATED POSTS SHALL BE SEATED IN POST OR COLUMN BASES PER PLAN.

16) ALL WALLS HIGHER THAN 10'-0" SHALL BE 2x6 OR 3x6 STUDS @ 16" o.c., UNLESS SPECIFICALLY DESIGNED OTHERWISE BY ENGINEER. ALL WALLS CONTAINING MECHANICAL PIPING 2" IN DIAMETER OR LARGER SHALL BE FRAMED WITH 2x6 STUDS @ 16" o.c.

17) CUTTING, NOTCHING, OR BORING HOLES IN STUDS SHALL COMPLY WITH 2019 CBC SECTION 2308.9.10 & 2308.9.11.

18) FRAMING AND NAILING NOT SPECIFICALLY DETAILED ON THE PLANS ARE TO CONFORM TO 2019 CBC TABLE 2304.9.1. COMMON NAILS ARE REQUIRED FOR ALL SHEARWALL, FLOOR AND ROOF DIAPHRAGMS. USE DOUBLE JOISTS UNDER PARALLEL PARTITIONS, U.N.O. DOUBLED HORIZONTAL MEMBERS SHALL BE STITCH-NAILED TOGETHER WITH TWO ROWS OF 16d NAILS @ 12" o.c. STAGGERED, UNLESS OTHERWISE DETAILED. TRIPLED HORIZONTAL MEMBERS SHALL HAVE MIN. 1/2" DIAMETER BOLTS AT 18" O.C. T&B, STAGGERED.

19) ANCHOR BOLTS TO SILL AND SOLE PLATES SHALL HAVE NUTS DRIVEN FLUSH WITH SQUARE PLATE WASHERS IN ACCORDANCE WITH THE FOLLOWING SCHEDULE:

BOLT DIAMETER	PLATE SIZE
5/8"	0.229" x 3" x 3"
3/4"	5/16" x 3" x 3"
7/8"	5/16" x 3" x 3"
1"	3/8" x 3 1/2" x 3 1/2"

THE ABOVE SCHEDULE ALSO APPLIES TO LAG SCREWS DRIVEN INTO SOLE PLATES FOR RAISED FLOOR AND UPPER STORY CONDITIONS.

20) LAG SCREWS SHALL BE INSTALLED IN PRE-DRILLED HOLES. THE CLEARANCE HOLE FOR THE SHANK PORTION SHALL HAVE THE SAME DIAMETER AND DEPTH AS THE SHANK. THE LEAD HOLE FOR THE THREADED PORTION SHALL HAVE A DIAMETER EQUAL TO 40%-70% OF THE SHANK DIAMETER (FOR ALL DOUG-FIR LARCH MEMBERS). LAG SCREWS ARE TO BE INSTALLED WITH THE TURN OF A WRENCH. DRIVING, AS WITH A HAMMER, IS NOT PERMITTED.

21) MINIMUM NAILING SHALL BE PER TABLE 2304.10.1 OF THE 2019 C.B.C.

22) ALL CONNECTORS AND METAL HARDWARE IN CONTACT WITH PRESSURE TREATED TIMBER SHALL HAVE CORROSION RESISTANT COATINGS OR PROTECTION, SUCH AS "ZMAX", HOT DIPPED GALVANIZED, OR BE STAINLESS STEEL.

STRUCTURAL STEEL

1) ALL STRUCTURAL STEEL SHALL CONFORM TO SECTION 2203.1 - 2022 CBC:
W-WIDE FLANGE SHAPES ASTM A992, Fy = 50-65 KSI
PLATES, ANGLES, CHANNELS: ASTM A36, Fy = 36 KSI
HOLLOW TUBE SHAPES: ASTM A500, GRADE B, Fy = 46 KSI
ROUND PIPE SHAPES: ASTM A53, GRADE B, Fy = 35 KSI

2) ALL STRUCTURAL STEEL SHALL BE FABRICATED IN A SHOP APPROVED BY THE LOCAL MUNICIPAL BUILDING DEPARTMENT.

3) STRUCTURAL SHOP DRAWINGS SHALL BE SUBMITTED TO THE STRUCTURAL ENGINEER FOR REVIEW PRIOR TO FABRICATION.

4) ALL STRUCTURAL STEEL SHALL BE IDENTIFIED PER 2019 CBC. DESIGN OF STEEL MEMBERS SHALL BE PER ASD PROVISIONS IN THE 2019 CBC SECTION 2205.1 & 2205.2.

5) STRUCTURAL STEEL SHALL HAVE A SHOP COAT OF RED-OXIDE PRIMER.

6) AFTER ERECTION, ALL FIELD CONNECTIONS, BOLTS, WELDS, AND ALL ABRADED PLACES ON THE SHOP PAINT SHALL BE TOUCHED UP WITH THE SAME TYPE OF PAINT AS THE SHOP COAT.

7) FIELD AND SHOP WELDING SHALL BE DONE BY A DULY CERTIFIED WELDER USING LOW-HYDROGEN E70-T6 ELECTRODE RODS, UNLESS NOTED OTHERWISE. CONTINUOUS INSPECTION BY A REGISTERED INSPECTOR IS REQUIRED FOR FIELD WELDING. ALL WELDING SHALL BE PER AWS, LATEST EDITION, AND AISC SPECIFICATIONS.

8) BOLTS SHALL BE OF A307 QUALITY WITH WASHERS, UNLESS OTHERWISE SPECIFIED ON PLANS. ANY HIGH STRENGTH A325 OR A490 BOLTS SHALL HAVE SPECIAL INSPECTION, UNLESS NOTED OTHERWISE.

9) STEEL ERECTOR SHALL PROVIDE ALL ERECTION BRACING REQUIRED TO MAINTAIN STRUCTURE PLUMB AND PROPERLY BRACED DURING CONSTRUCTION.

10) ALL STRUCTURAL STEEL SHALL BE DESIGNED BASED UPON THE ALLOWABLE STRESS DESIGN METHOD PER AISC 360.

CONCRETE

1) ALL PHASES OF WORK PERTAINING TO CONCRETE CONSTRUCTION SHALL CONFORM TO 2022 CBC CHAPTER 19 (BASED ON ACI-318, LATEST ADOPTED EDITION) FOR REINFORCED CONCRETE.

2) MINIMUM ULTIMATE COMPRESSIVE CONCRETE STRENGTHS (f'c) SHALL BE:
SLAB ON GRADE . . . . 2500 PSI @ 28 DAYS
STRUCTURAL DECK . . . . 3000 PSI @ 28 DAYS
COLUMNS . . . . 3000 PSI @ 28 DAYS
FOOTINGS . . . . 2500 PSI @ 28 DAYS
CONCRETE/GRADE BEAMS . . . . . . 3000 PSI @ 28 DAYS
CAISSONS . . . . 3000 PSI @ 28 DAYS

3) CONTINUOUS INSPECTION BY AN APPROVED DEPUTY INSPECTOR IS REQUIRED FOR CAISSONS, GRADE BEAMS, STRUCTURAL SLABS, AND OTHER CONCRETE MEMBERS WHERE DESIGN COMPRESSIVE STRENGTH VALUE EXCEEDS 2500 PSI.

4) CEMENT SHALL BE TYPE II, LOW ALKALI, CONFORMING TO A.S.T.M. C-150.

5) ALL PRIMARY REINFORCEMENT SHALL BE PER ASTM A-615, GRADE 60 ksi STEEL. ALL TIES AND STIRRUPS SHALL CONFORM TO A.S.T.M. A-615, GRADE 40 ksi STEEL.

6) UNLESS NOTED OTHERWISE, SPLICES OF REINFORCING SHALL BE LAPPED A MINIMUM OF 40 BAR DIAMETERS AND SECURELY WIRED TOGETHER, USING A MINIMUM OF 16 GA. WIRE. SPLICES OF ADJACENT REINFORCING BARS SHALL BE STAGGERED WHEREVER POSSIBLE. WHERE SPECIFICALLY CALLED OUT, WELDING OF REINFORCING BARS SHALL BE PERFORMED BY A CERTIFIED WELDER USING E90 SERIES ELECTRODES PER AWS, LATEST EDITION.

7) INTERIOR CONCRETE SLABS ON GRADE SHALL HAVE A STEEL TROWEL FINISH. DRIVEWAYS, WALKS, AND GARAGE SLABS SHALL HAVE A BROOM FINISH AND SHALL BE PITCHED TO SHED WATER.

8) PRIOR TO POURING INTERIOR CONCRETE FLOOR SLABS, ALL SOIL BELOW FLOOR SHALL BE COMPACTED TO REQUIRED DENSITY AND MOISTENED TO A DEPTH NOT LESS THAN 18" OR PER SOILS REPORT.

9) CLEAR COVERAGE OF CONCRETE OVER REINFORCING BARS, ANCHOR BOLTS, AND ALL OTHER CONCRETE INSERTS, UNLESS OTHERWISE SPECIFIED, SHALL BE AS FOLLOWS:
POURED AGAINST EARTH . . . . 3" CLEAR
FORMED CONCRETE . . . . 2" CLEAR

10) FORMS FOR CONCRETE SHALL BE LAID OUT AND CONSTRUCTED TO PROVIDE THE SPECIFIED CAMBERS SHOWN ON THE DRAWINGS. DECK CAMBERING SHOWN ON PLANS IS INTENDED TO PROVIDE A LEVEL DECK. ANY SLOPING FOR DRAINAGE SHALL BE ADDED OR SUBTRACTED FROM CAMBERING AS APPROPRIATE. THE DECK THICKNESS SHALL NOT BE REDUCED IN ORDER TO ACHIEVE DECK SLOPES.

11) DRYPACK UNDER BASEPLATES, SILL PLATES, AND WHERE OTHERWISE NOTED ON DRAWINGS SHALL CONSIST OF APPROVED NON-SHRINK HIGH STRENGTH GROUT. WHEN SPACE BETWEEN TWO SURFACES REQUIRES DRYPACK, IT SHALL BE PACKED BY TAMPING OR RAMMING WITH A BAR OR ROD UNTIL THE VOIDS ARE COMPLETELY FILLED.

12) PLACEMENT OF CONCRETE SHALL CONFORM TO A.C.I. LATEST STANDARD AND PROJECT SPECIFICATIONS. WIRE BRUSH OR SANDBLAST ALL CONCRETE SURFACES AGAINST WHICH CONCRETE IS TO BE PLACED.

13) IF COLUMNS AND WALLS ARE PLACED WITH FLOORS, MINIMUM TIME OF TWO HOURS MUST ELAPSE BETWEEN END OF COLUMN OR WALL POUR AND BEGINNING OF FLOOR POUR.

14) PROVIDE SLEEVES FOR PLUMBING AND ELECTRICAL OPENINGS IN CONCRETE BEFORE PLACING. DO NOT CUT ANY REINFORCING WHICH MAY CONFLICT. COPING IN CONCRETE IS NOT PERMITTED, EXCEPT AS SHOWN. NOTIFY THE PROJECT STRUCTURAL ENGINEER IN ADVANCE OF CONDITIONS NOT SHOWN ON THE STRUCTURAL DRAWINGS.

15) COVER TO BEAM REINFORCEMENT TO BE 2" MINIMUM FORMED CONCRETE & 3" MINIMUM AGAINST EARTH, UNLESS NOTED OTHERWISE.

16) ARCHITECTURAL DRAWINGS TO BE REFERRED TO FOR DECK SLOPES, DRAINAGE, PLUMBING, FRAMING AND ELECTRICAL HARDWARE & ALL DIMENSIONS.

17) REINFORCEMENT CALLED OUT IN DETAILS SHALL BE IN ADDITION TO THAT SHOWN ON PLANS (U.N.O). REINFORCING METHODS SHOWN IN DETAILS SHALL BE USED AS APPLICABLE.

18) WHEN A MONOLITHIC POUR IS NOT POSSIBLE, CONSTRUCTION JOINTS SHALL BE APPROVED BY THE PROJECT STRUCTURAL ENGINEER.

19) SHORING SHALL NOT BE REMOVED UNTIL CONCRETE HAS ACHIEVED MINIMUM 28 DAY COMPRESSIVE STRENGTH. FIFTEEN DAYS AFTER CONCRETE POUR IS COMPLETED THE PROJECT STRUCTURAL ENGINEER MAY DETERMINE, BASED ON COMPRESSION TESTS, IF SHORING MAY BE REMOVED.

20) ALL DECK SURFACES EXPOSED TO WEATHER SHALL BE WATERPROOFED. SEE ARCHITECTURAL DOCUMENTS FOR SPECIFICATIONS.

21) CONCRETE SHALL BE THOROUGHLY CONSOLIDATED IN A MANNER THAT WILL ENCASE THE REINFORCEMENT AND INSERTS, FILL THE FORMS, AND PRODUCE A SURFACE OF UNIFORM TEXTURE FREE OF ROCK POCKETS AND EXCESSIVE VOIDS. CONCRETE SHALL BE CONSOLIDATED BY MEANS OF HIGH FREQUENCY INTERNAL VIBRATORS WITHOUT CAUSING WATER OR CEMENT PASTE TO FLUSH TO THE SURFACE. INTERNAL VIBRATOR TYPE, SIZE, AND NUMBER SHALL BE APPROVED BY THE ENGINEER.

22) CONCRETE MIXING COMPANY SHALL PROVIDE TEST RECORDS AND STANDARD DEVIATION PER SECTION 1905 OF 2019 CBC.

SHEAR WALL

1) ONLY COMMON NAILS OR GALVANIZED BOX NAILS SHALL BE PERMITTED FOR REQUIRED NAILING AT VERTICAL SHEAR PANELS AND HORIZONTAL DIAPHRAGMS (ROOF AND FLOOR).

2) ALL SHEARWALLS WITH AN ALLOWABLE SHEAR CAPACITY GREATER THAN 350 plf REQUIRE 3x MEMBERS AT THE FOUNDATION SILL PLATE AND AT ADJACENT PANEL EDGES. A MINIMUM OF 1/2" EDGE DISTANCE FROM THE PANEL EDGE TO THE CENTER OF THE NAIL IS REQUIRED FOR THESE 3x MEMBERS.

3) ALL HOLD DOWN CONNECTORS SHALL BE TIGHTENED JUST PRIOR TO COVERING THE WALL FRAMING. BOLT HOLES FOR HOLD DOWN CONNECTION TO POST SHALL BE 1/16" (MAX.) OVERSIZED. INSPECTOR TO VERIFY HOLD DOWN CONNECTIONS.

4) PROVIDE MINIMUM 4x4 POSTS FOR ALL HOLD DOWNS ENDS OF SHEARWALL.

5) APPROVED PLATE WASHERS SHALL BE PROVIDED FOR ALL WOOD STRUCTURAL PANEL SHEAR WALL ANCHOR BOLTS AND FOR ALL HOLD DOWN CONNECTOR BOLTS TO POSTS.

BOLT DIAMETER	PLATE SIZE
5/8"	0.229" x 3" x 3"
3/4"	5/16" x 3" x 3"
7/8"	5/16" x 3" x 3"
1"	3/8" x 3 1/2" x 3 1/2"

DRAG LINE DL

DRAG LINE: SIMPSON ST6236 @ ALL BREAKS AND DIAPHRAGM EDGE NAILING.

@ ROOF: SHEAR WALL TO CONTINUE UP TO ROOF FRAMING, EDGE NAIL, AND INSTALL A35 PER SHEAR WALL SCHEDULE.

@ FLOOR: SHEAR WALL TO CONTINUE UP TO DBL TOP PL. MINIMUM, EDGE NAIL, AND INSTALL A35 PER SHEAR WALL SCHEDULE.

SUMMARY OF SPECIAL INSPECTION

VERIFICATION & INSPECTION	CONTINUOUS	PERIODIC	REFERENCE STANDARD	NOTE
SIMPSON SET XP EPOXY	X		ICC-ES ESR-2508	USE PER MANUF. SPECS.

A. THE SPECIAL INSPECTIONS LISTED ARE IN ADDITION TO THE CALLED INSPECTIONS REQUIRED BY SECTION 1700 OF THE CBC, AS AMENDED. SPECIAL INSPECTION IS NOT A SUBSTITUTE FOR INSPECTION BY A CITY INSPECTOR.
B. CONTINUOUS INSPECTION IS ALWAYS REQUIRED DURING THE PERFORMANCE OF THE WORK UNLESS OTHERWISE SPECIFIED. WHEN IN MORE THAN ONE CATEGORY OF WORK REQUIRING SPECIAL INSPECTION IS TO BE PERFORMED SIMULTANEOUSLY, OR THE GEOGRAPHIC LOCATION OF THE WORK IS SUCH THAT IT CANNOT BE CONTINUOUSLY OBSERVED IN ACCORDANCE WITH THE PROVISIONS OF UBC SECTION 1701.6.1, IT IS THE AGENT'S RESPONSIBILITY TO EMPLOY A SUFFICIENT NUMBER OF INSPECTORS TO ASSURE THAT ALL THE WORK IS INSPECTED IN ACCORDANCE WITH THOSE PROVISIONS.
C. THE SPECIAL INSPECTORS MUST BE CERTIFIED BY THE CITY OF SAN DIEGO TO PERFORM THE TYPE OF INSPECTION SPECIFIED.

EXCEPTIONS:
1. SOILS INSPECTIONS BY THE SOILS ENGINEER OF RECORD.
2. SMOKE CONTROL SYSTEM, BY THE MECHANICAL ENGINEER OF RECORD.
3. WHEN WAIVED BY THE BUILDING OFFICIAL.

D. IT IS THE RESPONSIBILITY OF THE CONTRACTOR TO NOTIFY THE SPECIAL INSPECTION AGENCY AT LEAST ONE WORKING DAY PRIOR TO PERFORMING ANY WORK THAT REQUIRES SPECIAL INSPECTION.
E. SPECIAL INSPECTED WORK THAT IS INSTALLED OR COVERED WITHOUT THE APPROVAL OF THE CITY INSPECTOR IS SUBJECT TO REMOVAL OR EXPOSURE.

NOTE 1: CONTACT PCSD AT (858) 509-8505 FOR STRUCTURAL INSPECTION OF WOOD SHEAR WALLS, WOOD DIAPHRAGMS, DRAG STRUTS, BRACES, SHEAR PANELS, AND HOLDOWNS.

NOTE 2: CONTACT TECHNICAL FIELD SERVICES, INC. CHRIS PINNOW, (760) 497-1264

TABLE 2304.10.1 NAILING SCHEDULE

CONNECTION	NAILING[1]
1. JOIST TO SILL OR GIRDER, TOENAIL	3-8d
2. BRIDGING TO JOIST, TOENAIL EACH END	2-8d
3. 1"X6" (25mm x 152mm) SUBFLOOR OR LESS TO EACH JOIST, FACE NAIL	2-8d
4. WIDER THAN 1"X6" (25mm x 152mm) SUBFLOOR TO EACH JOIST, FACE NAIL	3-8d
5. 2" (51mm) SUBFLOOR TO JOIST OR GIRDER, BLIND AND FACE NAIL	2-16d
6. SOLE PLATE TO JOIST OR BLOCKING, TYPICAL FACE NAIL	16d AT 16" (406mm) O.C.
SOLE PLATE TO JOIST OR BLOCKING, AT BRACED WALL PANELS	3-16d PER 16" (406mm)
7. TOP PLATE TO STUD, END NAIL	2-16d
8. STUD TO SOLE PLATE	4-8d, TOENAIL OR 12d, END NAIL
9. DOUBLE STUDS, FACE NAIL	16d AT 24" (610mm) O.C.
10. DOUBLE TOP PLATES, TYPICAL FACE NAIL	16d AT 16" (406mm) O.C.
DOUBLE TOP PLATES, LAP SPLICE	8-16d
11. BLOCKING BETWEEN JOISTS OR RAFTERS TO TOP PLATE	3-8d
12. RIM JOIST TO TOP PLATE, TOE NAIL	8d AT 6" (152mm) O.C.
13. TOP PLATES, LAPS AND INTERSECTIONS, FACE NAILS	2-16d
14. CONTINOUS HEADER, TWO PIECES	16d AT 16" (406mm) O.C. ALONG EACH EDGE
15. CEILING JOIST TO PLATE, TOE NAIL	3-8d
16. CONTINOUS HEADER TO STUD, TOE NAIL	4-8d
17. CEILING JOIST, LAPS OVER PARTITIONS, FACE NAIL	3-16d
18. CEILING JOISTS TO PARALLEL RAFTERS, FACE NAIL	3-16d
19. RAFTER TO PLATE, TOE NAIL	3-8d
20. 1" (25mm) BRACE TO EACH STUD AND PLATE, FACE NAIL	2-8d
21. 1"x8" (25mm x 203mm) SHEATHING TO EACH BEARING, FACE NAIL	2-8d
22. WIDER THAN 1" x 8" (25mm x 203mm) SHEATHING TO EACH BEARING, FACE NAIL	3-8d
23. BUILT-UP CORNERS STUDS	16d AT 24" (610mm) O.C.
24. BUILT-UP GIRDER AND BEAMS	20d AT 32" (813mm) O.C. AT TOP AND BOTTOM AND STAGGERED 2-20d AT ENDS AND AT EACH SPLICE
25. 2" (51mm) PLANKS	2-16d AT EACH BEARING
26. WOOD STRUCTURAL PANELS AND PARTICLE BOARD:[2] SUBFLOOR AND WALL SHEATHING (TO FRAMING):	
1/2" (12.7mm) AND LESS	6d[3]
19/32"-3/4" (15mm-19mm)	8d OR 6d[5]
7/8"-1" (22mm-25mm)	8d[3]
1 1/8"-1 1/4" (29mm-32mm)	10d OR 8d[5]
COMBINATION SUBFLOOR-UNDERLAYMENT (TO FRAMING):	
3/4" (19mm) AND LESS	6d[5]
7/8"-1" (22mm-25mm)	8d[5]
1 1/8"-1 1/4" (29mm-32mm)	10d OR 8d[5]
27. PANEL SIDING (TO FRAMING :[7]	
1/2" (12.7mm) OR LESS	6d[6]
5/8" (16mm)	8d[6]
28. FIREBOARD SHEATHING:[7]	
1/2" (12.7mm)	NO. 11 GA.[8] 6d[4] NO. 16 GA.[9]
25/32" (20mm)	NO. 11 GA.[8] 8d[4] NO. 16 GA.[9]
29. INTERIOR PANELING	
1/4" (6.4mm)	4d[10]
3/8" (9.5mm)	6d[11]

1 COMMON OR BOX NAILS MAY BE USED EXCEPT WHERE OTHERWISE STATED
2 NAILS SPACED AT 6" o.c AT EDGES, 12" AT INTERMEDIATE SUPPORTS WHERE SPANS ARE 48" OR MORE. FOR NAILING OF WOOD STRUCTURAL PANEL AND PARTICLEBOARD DIAPHRAGMS AND SHEAR WALLS, REFER TO SECTIONS 2315.3.3 AND 2315.4. NAILS FOR WALL SHEATHING MAY BE COMMON, BOX OR CASING, FOR WALL SHEATHING MAY BE COMMON, BOX OR CASING.
3 COMMON OR DEFORMED SHANK
4 COMMON
5 DEFORMED SHANK
6 CORROSION-RESISTANT SIDING OR CASING NAILS CONFORMING TO THE REQUIREMENTS OF SECTION 2304.3.
7 FASTENERS SPACED 3" o.c. AT EXTERIOR EDGES AND 6" o.c. AND INTERMEDIATE SUPPORTS.
8 CORROSION-RESISTANT ROOFING NAILS WITH 7/16-INCH-DIAMETER HEAD AND 1 1/2-INCH LENGTH FOR 1/2" SHEATHING AND 1 1/2"-INCH LENGTH FOR 25/32-INCH SHEATHING CONFORMING TO THE REQUIREMENTS OF SECTION 2304.3
9 CORROSION-RESISTANT STAPLES WITH NOMINAL 7/16"-INCH CROWN AND 1 1/8-INCH LENGTH FOR 1/2" SHEATHING AND 1 1/2"-INCH LENGTH FOR 25/32-INCH SHEATHING CONFORMING TO THE REQUIREMENTSOF SECTION 2304.3
10 PANEL SUPPORTS AT 16" , 20" - IF STRENGTH AXIS IN THE LONG DIRECTION OF THE PANEL, UNLESS OTHERWISE MARKED). CASING OR FINISH NAILS SPACED 6" ON PANEL EDGES, 12" AT INTERMEDIATE SUPPORTS.
11 PANEL SUPPORTS AT 24". CASING OR FINISH NAILS SPACED 6" ON PANEL EDGES, 12" (305mm) AT INTERMEDIATE SUPPORTS.

2022 CALIFORNIA BUILDING CODE SHEARWALL SCHEDULE

1-01-20

SHEAR-WALL No.	STRUCT I APA-RATED WOOD STRUCTURAL PANEL THICKNESS	COMMON NAIL SPACING @ BOUNDARIES & EDGES (B.N. & E.N.) FIELD NAILING @ 12" O.C.	ALLOWABLE SHEAR / FT (WOOD STUDS @16" O.C., U.N.O)	SLIDING ANCHOR[4] SYSTEM: 5/8"~ A.B. SPACING[2] 2x SILL V= 1184# 3x SILL V= 1520# O.C.	FRAMING CLIP SPACING V=450# O.C.	16d COMMON NAIL SPACING[3] OR GALV. BOX 2x SOLE PLATE ONLY: V= 121# O.C.	1/4" SDS x 6" LONG 3x SOLE PLATE ONLY: V= 537# O.C.
S	7/8" STUCCO	No. 11 GA. @ 6" O.C.	180#/FT.	60"	A35 @ 30"	8"	36"
A	3/8"	8d @ 6" o.c.	280#/FT.	54"	A35 @ 18"	5"	23"
A.1	15/32"	8d @ 4" o.c.	350#/FT.	48"	A35 @ 15"	4"	18"
B[1]	15/32"	8d @ 4" o.c.	430#/FT.	42"	A35 @ 12"	3"	15"
C[1]	15/32"	8d @ 3" o.c.	550#/FT.	32"	A35 @ 9"	2"	12"
D[1]	15/32"	8d @ 2" o.c.	730#/FT.	24"	A35 @ 7"	→	9"
E[1]	15/32"	10d @ 2" o.c.	870#/FT.	20"	A35 @ 6"	→	6"

1. FRAMING AT FOUNDATION SILL PLATES AND ADJOINING PANEL EDGE STUDS SHALL BE A SINGLE 3x NOMINAL MEMBER, AND ALL NAILS SHALL BE STAGGERED WITH 1/2" EDGE DISTANCE. 2x NOMINAL SOLE PLATE MAY BE USED AT RAISED FLOOR AND UPPER LEVELS.
2. SIMPSON BP5/8 BEARING PLATES (LARR 25293), OR OTHER LISTED MAKE, APPROVED BY BUILDING OFFICIAL, SHALL BE USED WITH ALL 5/8"~ ANCHORS. 5/8"~ SIMPSON TITAN HD ANCHORS (ICC-ES-ESER-1056/LARR# 25560) WITH 4\" MIN. EMBEDMENT, MAY BE USED IN LIEU OF 5/8"~ ANCHOR BOLTS AT EXISTING FOOTINGS WITH SAME SPACING PER TABLE ABOVE. SPECIAL INSPECTION REQUIRED FOR ALL EPOXY ANCHOR INSTALLATIONS.
3. ALL SILL NAILING SHALL BE STAGGERED 1/2" MINIMUM. (TYPICAL)
4. WHEN A SHEARWALL IS SPECIFIED ON BOTH SIDES OF WALL, ALL SLIDING ANCHOR CONNECTORS SHALL BE ATTACHED WITH SPACINGS FROM THE TABLE ABOVE TO BE REDUCED BY HALF.

STRUCTURAL DESIGN BASIS

VERTICAL DESIGN

- ROOF DEAD LOAD = 14.0 PSF
- ROOF LIVE LOAD = 20.0 PSF
- ROOF SNOW LOAD = N/A
- FLOOR DEAD LOAD = 15.0 PSF
- FLOOR LIVE LOAD = 40.0 PSF (60.0 PSF - DECKS)

LATERAL DESIGN

SEISMIC:
- SITE CLASS: D — IMPORTANCE FACTOR, I : 1.0
- OCCUPANY CATEGORY: II — SEISMIC DESIGN CATEGORY: D
- Ss = 0.761 S1 = 0.280 — LATITUDE: 32.801
- Sds = 0.609 Sd1 = 0 — LONITUDE: -116.964
- SEISMIC FORCE RESISTING SYSTEM(S): PLYWD SHEAR WALLS, R=6.5
- Cs = Sds / (R/I) = 0.094 / 1.4 (ASD)
- V = Cs * W (ASD) = 0.067 * W

WIND:
- BASIC WIND SPEED = 110 MPH — IMPORTANCE FACTOR = 1.0
- OCCUPANCY CATEGORY: II — WIND EXPOSURE CAT. = B
- HEIGHT & EXPOSURE ADJ. COEFF: 1.0
- TOPOGRAPHIC ADJ. FACTOR: 1.0
- SIMPLIFIED DESIGN WIND PRESSURE: 26.6 PSF (Ps30)
- DESIGN WIND PRESSURE = 16.0 PSF

FOUNDATION DESIGN

- SOIL - TYPE 5 (SITE CLASS D USED FOR LATERAL DESIGN)
- ALLOWABLE SOIL BEARING PRESSURE - 1,500 PSF.
- RETAINING WALLS:
  RESTRAINED LOAD (EFP) = NA PCF
  CANTILEVERED LOAD (EFP) = NA PCF (LEVEL)
  PASSIVE SOIL PRESSURE = NA PCF / 2000 PCF MAX.
  COEFFICIENT OF FRICTION = NA
- SOILS REPORT BY: NA

REGISTERED PROFESSIONAL ENGINEER PAUL S. CHRISTENSON C 057182 EXP. 12-31-23 CIVIL STATE OF CALIFORNIA

REVISIONS | BY

PCSD

PROJECT: San Diego Family Dermatology
222 W. Madison Avenue
El Cajon, CA 92020

DRAWING: Structural Notes

JOB #: 23-173
FILE: SDDermdwg
DRAWN: PC
ENGINEER: PC
DATE: 4-25-23

STAMP

REGISTERED PROFESSIONAL ENGINEER No. C057182 EXP. 12-31-23 CIVIL STATE OF CALIFORNIA

SN1

MECHANICAL GENERAL NOTES

1. THE CONTRACTOR SHALL PROVIDE A COMPLETE & WORKING MECHANICAL SYSTEM, INCLUDING ALL NECESSARY DEVICES & APPURTENANCES NOT SHOWN ON THE PLANS. ALL WORK SHALL MEET ALL APPLICABLE CODES & REQUIREMENTS, INCLUDING THE 2019 CALIFORNIA MECHANICAL CODE, 2019 CAL GREEN CODE & 2019 CALIFORNIA BUILDING ENERGY EFFICIENCY STANDARDS. THE CONTRACTOR IS RESPONSIBLE FOR ALL REQUIRED FEES PERTAINING TO HIS WORK. COORDINATE ALL WORK WITH OTHER TRADES.

2. THE CONTRACTOR SHALL REFER TO ELECTRICAL CONTRACT DRAWINGS TO OBTAIN INFORMATION ON STARTERS, VOLTAGE, PHASE, INTERLOCKING OF CONTROLS & MISC. ITEMS SUCH AS RELAYS. ALL EQUIPMENT SHALL COMPLY WITH ELECTRICAL & CONTROL REQUIREMENTS.

3. RIGID DUCTWORK SHALL BE CONSTRUCTED OF GALVANIZED SHEET METAL PER 2019 CMC & SMACNA STANDARDS & INSTALLED IN A WORKMANLIKE MANNER. ROUND RIGID DUCT SHALL BE FLAT SPIRAL SEAM. WRAP RIGID SUPPLY & RETURN AIR DUCTWORK, INCLUDING FITTINGS, CONCEALED ABOVE CEILINGS & IN DUCT ENCLOSURES WITH 1" THICK FIBERGLASS DUCT INSULATION WITH A FOIL OR PVC VAPOR BARRIER. DUCTWORK NOTED TO BE LINED SHALL HAVE A 1-INCH THICK ACOUSTICAL LINER, WITH GLASS MAT AIRSTREAM SURFACE WITH ANTIMICROBIAL COATING, INSTALLED PER MANUFACTURER'S RECOMMENDATIONS. DUCT SIZES ON PLANS INDICATE CLEAR INSIDE DIMENSIONS.

4. FLEXIBLE DUCTWORK FOR SUPPLY AIR, RETURN AIR & OUTSIDE AIR SHALL BE CONSTRUCTED OF A POLYMERIC INNER CORE PERMANENTLY BONDED TO CORROSION RESISTANT STEEL SPIRAL REINFORCING, COVERED WITH FIBERGLASS INSULATING BLANKET & A LOW PERMEABILITY PVC VAPOR BARRIER. FLEXIBLE DUCTWORK FOR EXHAUST AIR SHALL BE CONSTRUCTED OF SPIRALLY WOUND & MECHANICALLY JOINED DEAD SOFT ALUMINUM. ALL DUCT, INSULATION & ADHESIVES SHALL BE SMOKE & FIRE RESISTANT IN CONFORMANCE WITH NFPA-90A, 90B & UL181 FOR CLASS 1 AIR DUCT. FLEXIBLE AIR DUCTS SHALL BE INSTALLED IN ACCORDANCE WITH MANUFACTURER'S INSTALLATION INSTRUCTIONS & SMACNA HVAC DUCT CONSTRUCTION STANDARDS - METAL AND FLEXIBLE. FLEXIBLE AIR DUCT INSTALLATIONS SHALL COMPLY WITH THE FOLLOWING:
   - DUCTS SHALL BE INSTALLED USING THE MINIMUM REQUIRED LENGTH TO MAKE THE CONNECTION.
   - HORIZONTAL DUCT RUNS SHALL BE SUPPORTED AT NOT MORE THAN 4 FT. INTERVALS.
   - SAG BETWEEN SUPPORT HANGERS SHALL NOT EXCEED 1/2 INCH PER FOOT OF SUPPORT SPACING.
   - SUPPORTS SHALL BE RIGID & SHALL BE NOT LESS THAN 1.5 INCHES WIDE AT POINT OF CONTACT WITH DUCT SURFACE.
   - DUCT BENDS SHALL NOT BE LESS THAN 1 DUCT DIAMETER BEND RADIUS.
   - SCREWS SHALL NOT PENETRATE THE INNER LINER OF NON-METALLIC FLEXIBLE DUCTS UNLESS PERMITTED IN ACCORDANCE WITH THE MANUFACTURER'S INSTALLATION INSTRUCTIONS.
   - FITTINGS FOR ATTACHING NON-METALLIC DUCTS SHALL BE BEADED & HAVE A COLLAR LENGTH OF NOT LESS THAN 2 INCHES FOR ATTACHING THE DUCT.
   - DUCT INNER LINER SHALL BE INSTALLED AT NOT LESS THAN 1 INCH ON THE COLLAR & PAST THE BEAD PRIOR TO THE APPLICATION OF THE TAPE & MECHANICAL FASTENER. WHERE MASTIC IS USED INSTEAD OF TAPE, THE MASTIC SHALL BE APPLIED IN ACCORDANCE WITH THE MASTIC MANUFACTURER'S INSTRUCTIONS.
   - DUCT OUTER VAPOR BARRIER SHALL BE SECURED USING 2 WRAPS OF APPROVED TAPE. A MECHANICAL FASTENER SHALL BE PERMITTED TO BE USED IN PLACE OF, OR IN COMBINATION WITH THE TAPE.
   - FLEXIBLE AIR DUCTS SHALL NOT PENETRATE A FIRE-RESISTANCE-RATED ASSEMBLY OR CONSTRUCTION.
   - THE TEMPERATURE OF THE AIR TO BE CONVEYED IN A FLEXIBLE DUCT SHALL NOT EXCEED 250°F.
   - FLEXIBLE AIR DUCTS SHALL BE SEALED IN ACCORDANCE WITH SECTION 603.10.

5. MECHANICAL CONTRACTOR SHALL PROVIDE TO THE OWNER A MANUAL WITH ALL OPERATION & MAINTENANCE INFORMATION, INCLUDING ALL WIRING DIAGRAMS, FOR ALL EQUIPMENT & SYSTEMS.

6. ALL EQUIPMENT AND WORK SHALL BE GUARANTEED FOR ONE YEAR AFTER OWNER ACCEPTANCE OF THE PROJECT.

7. ATTIC/UNDERFLOOR INSTALLATION MUST COMPLY WITH SECTIONS 504, 604 & 701.10 OF C.M.C.

8. AIR QUANTITIES INDICATED FOR INTERIOR RESTROOMS EXCEED CODE MINIMUM OF 12 AIR CHANGES PER HOUR.

9. ALL ENVELOPE & MECHANICAL CERTIFICATE OF ACCEPTANCE FORMS & ALL RELATED ACCEPTANCE DOCUMENTS SHALL BE SUBMITTED TO THE FIELD INSPECTOR DURING CONSTRUCTION. CERTIFICATE OF OCCUPANCY WILL NOT BE ISSUED UNTIL THESE FORMS ARE REVIEWED & APPROVED.

10. EXHAUST DUCTS SHALL BE EQUIPPED WITH BACKDRAFT DAMPERS PER SECTION 504.0, C.M.C.

11. PROVIDE SMOKE DETECTORS IN MAIN SUPPLY AIR DUCTS OF AIR MOVING SYSTEMS EXCEEDING 2000 CFM.

12. CONTRACTOR SHALL BALANCE ALL SYSTEMS TO AIR QUANTITIES INDICATED AT ALL INLETS & OUTLETS TO WITHIN 10% OF DESIGN. PROVIDE BALANCING DAMPERS AS REQUIRED. PROVIDE AIR BALANCE REPORT IN AABC FORMAT TO OWNER PRIOR TO FINAL INSPECTION.

13. ALL HVAC EQUIPMENT & APPLIANCES SHALL MEET THE REQUIREMENTS PER SECTIONS 111-113, 115 & 120-124 E.E.S.

14. ALL HVAC EQUIPMENT SHALL MEET THE MIN. ENERGY EFFICIENCY STANDARDS OF THE CEC.

15. ALL HVAC SYSTEMS SHALL MEET THE CONTROL REQUIREMENTS PER SECTIONS 112 & 122 E.E.S.

16. AIR HANDLING DUCT SYSTEM SHALL BE CONSTRUCTED, INSTALLED & SEALED AS PROVIDED IN CHAPTER 6 OF THE CALIF. MECHANICAL CODE.

17. ALL PIPING & DUCTWORK SHALL BE INSULATED CONSISTENT WITH THE REQUIREMENTS OF SECTIONS 120.3 & 120.4 TITLE 24 ENERGY EFFICIENCY STANDARDS & CHAPTER 6 OF C.M.C.

18. ALL NEW VENTILATION SYSTEMS MUST BE RECORDED BY STATE OF CALIFORNIA REGULATIONS VIA AIR BALANCE AND/OR OUTSIDE AIR CERTIFICATION FOLLOWING AABC OR NABB STANDARDS.

19. CONTRACTOR SHALL CONDUCT DUCT LEAKAGE TEST IN COMPLIANCE WITH CMC 603.10.1.

ROOFTOP HEAT PUMP SCHEDULE

MARK	MANUF.	MODEL NO.	CFM	E.S.P.	COOLING CAPACITY TOTAL	COOLING CAPACITY SENSIBLE	HEATING CAPACITY	ELECTRICAL DATA MCA	ELECTRICAL DATA MCOP	ELECTRICAL DATA VOLTAGE	EFFICIENCY SEER	EFFICIENCY EER	EFFICIENCY HSPF	OPER. WT.	MINIMUM O.A. CFM	FILTERS MERV	FILTERS QTY.	FILTERS SIZE	ACCESSORIES
HP-1	YORK	PHE6B3621	1100	0.5"	35.3 MBH	24.3 MBH	34.3 MBH	25.0	40 A	230V-1 PH	16.0	12.5	8.2	600 LB.	200	13	1 1	16"x20"x2" 14"x20"x2"	MOTORIZED OUTSIDE AIR DAMPER, 8" ROOF CURB FILTER FRAME KIT, ELECTRONIC PROGRAMMABLE THERMOSTAT
HP-2	YORK	PHE6B4821	1600	0.5"	46.2 MBH	33.6 MBH	44.9 MBH	33.6	50 A	230V-1 PH	16.0	12.5	8.2	650 LB.	200	13	1 1	16"x20"x2" 14"x20"x2"	
HP-3	YORK	PHE6B3621	1100	0.5"	35.3 MBH	24.3 MBH	34.3 MBH	25.0	40 A	230V-1 PH	16.0	12.5	8.2	600 LB.	100	13	1 1	16"x20"x2" 14"x20"x2"	
HP-4	YORK	PHE6B3621	1100	0.5"	35.3 MBH	24.3 MBH	34.3 MBH	25.0	40 A	230V-1 PH	16.0	12.5	8.2	600 LB.	75	13	1 1	16"x20"x2" 14"x20"x2"	

NOTE: COOLING CAPACITIES BASED UPON 80°F DB/67°F WB ENTERING AIR TEMP., 95°F AMBIENT TEMPERATURE. HEATING CAPACITY BASED UPON 70°F ENTERING AIR TEMPERATURE, 47°F AMBIENT TEMPERATURE.

DIFFUSER, REGISTER AND GRILLE SCHEDULE

MARK	DESCRIPTION	TYPE	MANUF.	MODEL NO.	CONSTRUCTION	FRAME	DAMPER(S)	FEATURES / ACCESSORIES
CD	CEILING DIFFUSER	MODULAR CORE	PRICE	SMCD-6-4-B12	STEEL	LAY-IN	OPPOSED BLADE	4-WAY THROW, UNLESS NOTED OTHERWISE
RG	RETURN GRILLE	FIXED BLADE	PRICE	630-FLA-B12	ALUMINUM	LAY-IN		FIXED HORIZ. BARS AT 45° ANGLE, 3/4" O.C.
DG	DOOR GRILLE	V-BLADE	PRICE	AT61 BF B15	ALUMINUM	DBL. FLAT		NON-VISION FIXED HORIZ. BARS, 3/8" O.C.

EXHAUST FAN SCHEDULE

MARK	SERVICE	MANUF.	MODEL NO.	CFM	S.P.	RPM	SONES	OPER. WT.	ELECTRICAL W	ELECTRICAL VOLT.	FEATURES/ACCESSORIES
EF-1	LAVATORY 103	GREENHECK	SP-A190	175	0.25"	1400	2.0	17 LB.	50	115V-1PH	24 HR. OPERATION, WC-8x6 WALL CAP
EF-2	LAVATORY 104	GREENHECK	SP-A125	100	0.25"	1010	0.6	17 LB.	22	115V-1PH	OCCUPANCY SENSOR, WC-8x6 WALL CAP
EF-3	LAVATORY 107	GREENHECK	SP-A125	100	0.25"	1010	0.6	17 LB.	22	115V-1PH	OCCUPANCY SENSOR, WC-8x6 WALL CAP
EF-4	PHOTO 111	GREENHECK	SP-A190	175	0.25"	1400	2.0	17 LB.	50	115V-1PH	OCCUPANCY SENSOR, ROOF CAP

KEY NOTES

1. MOUNT ON LEVELED 8" FACTORY ROOF CURB PER DETAIL 1, THIS SHEET. DROP LINED 16/12 S.A. & R.A. DUCTS FROM CURB THRU ROOF. SEE SHT. M-101.
2. RUN 8"Φ E.A. DUCT FROM FAN BELOW UNDER SLOPED ROOF TO WALL CAP AT FACE OF PARAPET WALL. MOUNT AS HIGH AS POSSIBLE.
3. RUN 8/8 E.A. DUCT FROM EF-4 BELOW UP THRU ROOF TO CAP. MAINTAIN MIN. 10'-0" CLEARANCE FROM ALL OUTSIDE AIR INTAKES.
6. MOTORIZED OUTSIDE AIR DAMPER W/HOOD & INSECT SCREEN. BALANCE TO MINIMUM OUTSIDE AIR VOLUME IN ROOFTOP HEAT PUMP SCHEDULE, THIS SHEET.

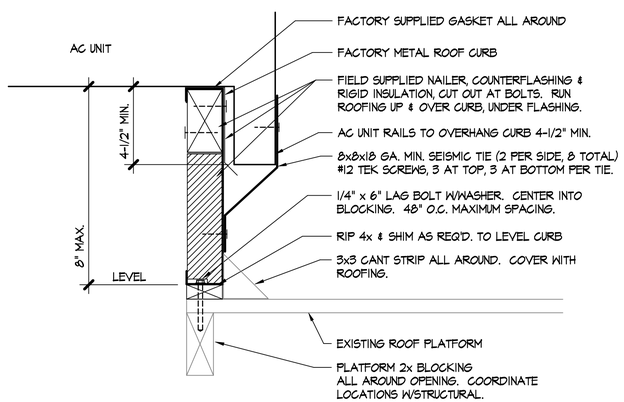

1 M-100 | M-100 ROOF CURB ANCHORAGE DETAIL
NO SCALE

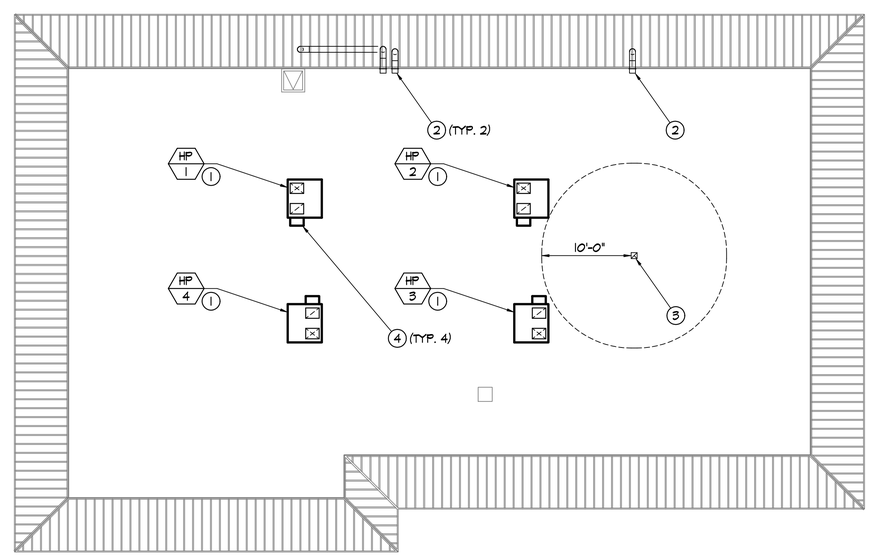

MECHANICAL ROOF PLAN
SCALE: 1/8" = 1'-0"

MECHANICAL SYMBOL LEGEND

SYMBOL	ABBREVIATION	DESCRIPTION
1-1/2"		WHOLE AND FRACTION OF AN INCH (ONE AND ONE-HALF INCHES IS SHOWN)
	S.A.	SUPPLY AIR DUCT
	R.A.	RETURN AIR DUCT
	E.A.	EXHAUST AIR DUCT
	O.A.	OUTSIDE AIR DUCT
	CD	CEILING DIFFUSER W/VOLUME DAMPER
	RG	RETURN GRILLE
	SPIN-IN	SPIN-IN TAKEOFF WITH VOLUME DAMPER
	FLEX	FLEXIBLE DUCT
12/14	X/X	CLEAR INSIDE DUCT DIMENSIONS FIRST DIMENSION IS SIDE SHOWN
B/J	B/J	DUCT RUN HIGH BETWEEN JOISTS
VD	VD	VOLUME DAMPER
T	T-STAT	THERMOSTAT
S	SD	DUCT MOUNTED SMOKE DETECTOR

NOTE: NOT ALL SYMBOLS USED ON THIS PROJECT.

phone 619.825.7516
PO Box 2186
Spring Valley, CA 91979
project number 23011
ENGINEERED SYSTEMS
Consulting Engineers
engsysmail@gmail.com

NDAA group
architects
4990 N Harbor Drive, Ste 201
San Diego, CA 92106
tel: 619-297-8066
web: www.ndaainc.com

REGISTERED PROFESSIONAL ENGINEER WILLIAM L. TOLIVER NO. 28653 Exp. 12/31/2023 MECHANICAL STATE OF CALIFORNIA

DO NOT SCALE DRAWINGS.
ANY DISCREPANCIES TO BE REVIEWED WITH THE ARCHITECT.

SAN DIEGO FAMILY DERMATOLOGY
222 W. MADISON AVE.
EL CAJON, CA 92020

REVISION SCHEDULE		
NO	DATE	ISSUE
1	7/24/2023	1ST CITY REVISION

Project No:	23011
Project Start Date:	Issue Date
Drawn:	C. Moya
Checked:	W. Toliver
Revision:	
Sheet Name:	

MECHANICAL ROOF PLAN & SCHEDULES

Scale:	NONE
Sheet No:	

M-100

7/26/2023

MECHANICAL VENTILATION SCHEDULE

ZONE	ROOM	OCCUPANTS	CFM/OCC.	OCC. CFM	AREA (S.F.)	CFM/S.F.	AREA CFM	CFM REQ'D
HP-1	101	3	5	15	111.3	0.06	7	22
	112, 115-117	4	N/A	N/A	292.7	2 ACH	78	78
	NURSE	3	N/A	N/A	145.4	2 ACH	39	39
	CORR.	0	0	0	368.4	0.15	55	55
HP-2	105/113	0	0	0	291.9	0.15	44	44
	106/109	2	5	10	318.6	0.06	19	29
	108	3	5	15	267.9	0.06	16	31
	110	9	5	45	294.9	0.06	18	63
HP-3	114/CORR.	1	5	5	400.7	0.15	60	65
	124	1	5	5	99.7	0.06	6	11
	125-129	5	N/A	N/A	683.6	2 ACH	23	23
HP-4	118-121	4	N/A	N/A	342.3	2 ACH	13	13
	122/123	2	5	10	429.4	0.06	26	36
	CORR.	0	0	0	141.9	0.15	21	21

KEY NOTES

1. 8x8 CD, 8"Φ NECK, 125 CFM.
2. 22x22 RG-1. 10"Φ NECK.
3. 8x8 CD, 8"Φ NECK, 100 CFM, 2-WAY OPP. THROW.
4. 8x8 CD, 8"Φ NECK, 150 CFM.
5. 10x10 CD, 10"Φ NECK, 200 CFM.
6. 16x12 DG, BOTTOM AT 12" A.F.F.
7. MOUNT SECURELY TO STRUCTURE WITH GRILLE TIGHT TO CEILING PER MANUF. RECOMMEND. RUN 8"Φ E.A. DUCT UP THRU ROOF TO CAP. SEE MECHANICAL ROOF PLAN, SHEET M-100.
8. 8x8 CD, 7"Φ NECK, 75 CFM, 3-WAY THROW.
9. 8x8 CD, 7"Φ NECK, 75 CFM, 1-WAY THROW.
10. 8x8 CD, 8"Φ NECK, 125 CFM, 2-WAY OPP. THROW.
11. 8x8 CD, 8"Φ NECK, 175 CFM, 3-WAY THROW.
12. 12x12 CD, 12"Φ NECK, 500 CFM.
13. 12x12 CD, 12"Φ NECK, 500 CFM.
14. 10x10 CD, 10"Φ NECK, 225 CFM.
15. 22x22 RG, 14"Φ NECK.
16. 8x8 CD, 8"Φ NECK, 100 CFM.
17. 8x8 CD, 7"Φ NECK, 75 CFM, 2-WAY CORNER THROW.
18. MOUNT SECURELY TO STRUCTURE WITH GRILLE TIGHT TO CEILING PER MANUF. RECOMMEND. CONNECT 8/8 E/A/ DUCT & OFFSET ABOVE CEILING. RUN DUCT UP THRU ROOF TO CAP. SEE MECHANICAL ROOF PLAN.
19. DROP 16/12 LINED S.A. & R.A. DUCTS FROM ROOF CURB AT HEAT PUMP ON ROOF ABOVE. SEE SHEET M-100. TURN TO LINED HORIZONTAL DUCTS W/LINED ELBOWS. PROVIDE SMOKE DETECTOR IN S.A. DUCT DROP. WIRE TO SHUTDOWN ALL 4 HEAT PUMPS UPON DETECTION.
20. MOUNT THERMOSTAT ON WALL AT 48" A.F.F.
21. 10x10 CD, 10"Φ NECK, 300 CFM.
22. FLEXIBLE DUCT. SEE MECHANICAL GENERAL NOTE 4, SHEET M-100.

phone 619.825.7516
PO Box 2186
Spring Valley, CA
91979
project number 23011
ENGINEERED SYSTEMS
Consulting Engineers
engsysmail@gmail.com

NDAA group
architects
4990 N Harbor Drive, Ste 201
San Diego, CA 92106
tel: 619-297-8066
web: www.ndaainc.com

REGISTERED PROFESSIONAL ENGINEER
WILLIAM L. TOLIVER
No. 29653
Exp. 12/31/2023
MECHANICAL
STATE OF CALIFORNIA

DO NOT SCALE DRAWINGS.
ANY DISCREPANCIES TO BE REVIEWED WITH THE ARCHITECT.

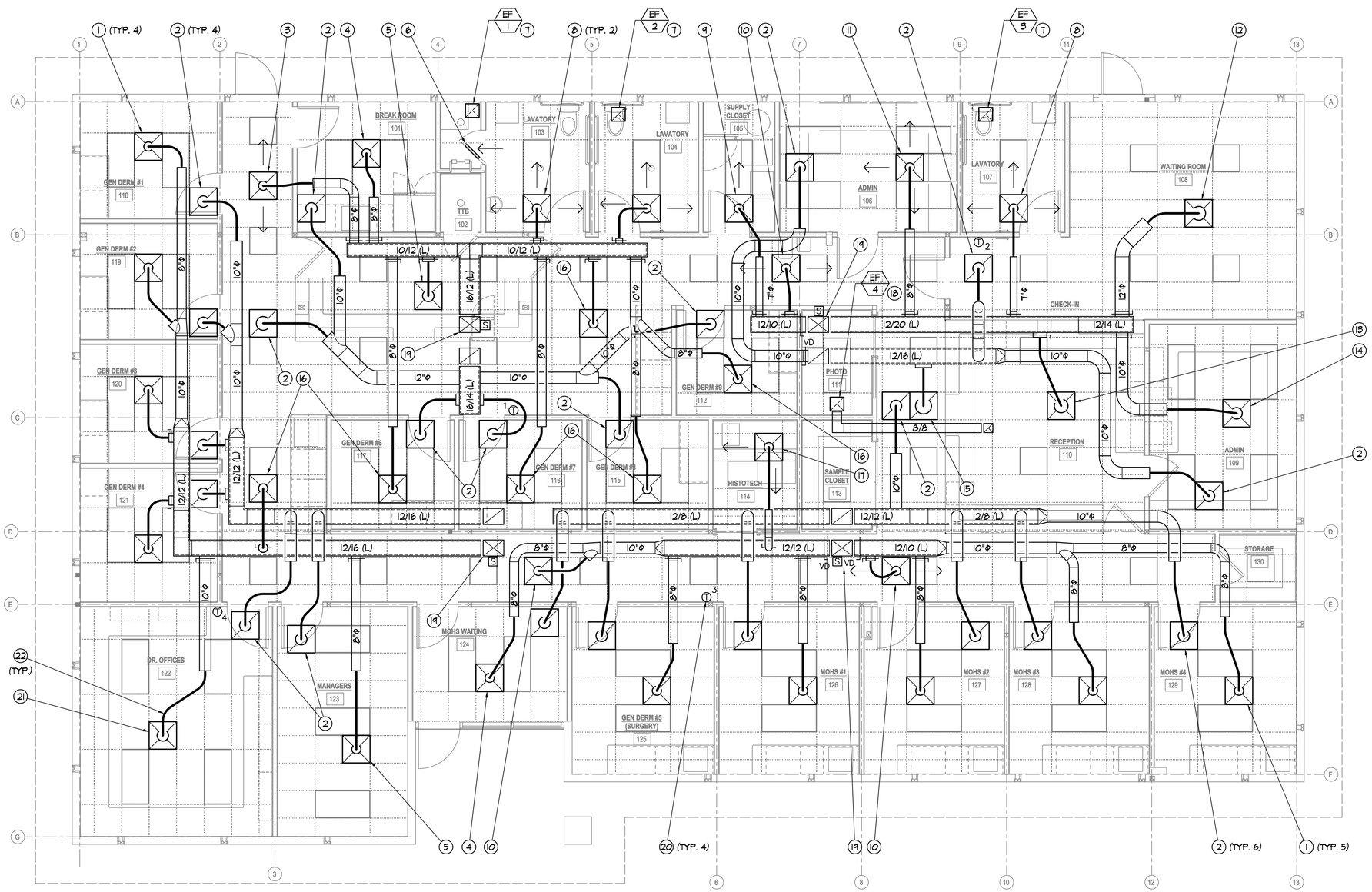

SAN DIEGO FAMILY DERMATOLOGY

222 W. MADISON AVE.
EL CAJON, CA 92020

REVISION SCHEDULE		
NO	DATE	ISSUE
1	7/24/2023	1ST CITY REVISION

Project No:	23011
Project Start Date:	Issue Date
Drawn:	C. Moya
Checked:	W. Toliver
Revision:	
Sheet Name:	

MECHANICAL PLAN

North: TRUE PROJECT

Scale:	1/4" = 1'-0"
Sheet No:	

M-101

7/26/2023

CERTIFICATE OF COMPLIANCE - NONRESIDENTIAL PERFORMANCE COMPLIANCE METHOD	NRCC-PRF-E
Nonresidential Performance Compliance Method	(Page 1 of 15)

Project Name:	San Diego Family Dematology	Date Prepared:	2023-07-26

A. General Information					
1	Project Name	San Diego Family Dematology			
2	Run Title	Title 24 Analysis			
3	Project Location	222 W. Madison Ave.			
4	City	El Cajon	5	Standards Version	Compliance 2022
6	Zip code	92020	7	Compliance Software (version)	EnergyPro 9.1
8	Climate Zone	10	9	Building Orientation (deg)	0
10	Building Type(s)	• Nonresidential	11	Weather File	RAMONA_STYP20.epw
12	Project Scope	• Existing alteration	13	Number of Dwelling Units	0
14	Total Conditioned Floor Area in Scope (ft^2)	4402.9	15	Total # of hotel/motel rooms	0
16	Total Unconditioned Floor Area (ft^2)	0	17	Fuel Type	Natural gas
18	Nonresidential Conditioned Floor Area	4402.9	19	Total # of Stories (Habitable Above Grade)	1
20	Residential Conditioned Floor Area	0			

CERTIFICATE OF COMPLIANCE - NONRESIDENTIAL PERFORMANCE COMPLIANCE METHOD	NRCC-PRF-E
Nonresidential Performance Compliance Method	(Page 2 of 15)

B. PROJECT SUMMARY

Table B shows which building components are included in the performance calculation. If indicated as not included, the project must show compliance prescriptively if within the permit application.

Building Components Complying via Performance						Building Components Complying Prescriptively	
Envelope (See Table G)	Nonres	Not included	Solar Thermal Water Heating (See Table I3)	☐	Performance	The following building components are ONLY eligible for prescriptive compliance and should be documented on the NRCC form listed if within the scope of the permit application (i.e. compliance will not be shown on the NRCC-PRF-E).	
	MultiFam	Not included		☒	Not included		
Mechanical (See Table H)	Nonres	Performance	Covered Process: Commercial Kitchens (see Table J)	☐	Performance	Indoor Lighting (Unconditioned) 140.6 & 170.2(e)	NRCC-LTI-E is required
	MultiFam	Not included		☒	Not included	Outdoor Lighting 140.7 & 170.2(e)	NRCC-LTO-E is required
Domestic Hot Water (See Table I)	Nonres	Performance	Covered Process: Laboratory Exhaust (see Table J)	☐	Performance	Sign Lighting 140.8 & 170.2(e)	NRCC-LTS-E is required
	MultiFam	Not included		☒	Not included	**Building Components Complying with Mandatory Measures**	
Lighting (Indoor Conditioned, see Table K)	Nonres	Performance	Photovoltaics (see Table F)	☒	Performance	Electrical power systems, commissioning, solar ready, elevator and escalator requirements are mandatory and should be documented on the NRCC form listed if applicable (i.e. compliance will not be shown on the NRCC-PRF-E.)	
	MultiFam	Not included		☐	Not included	Electrical Power Distribution 110.11	NRCC-ELC-E is required
			Battery (see Table F)	☐	Performance	Commissioning 120.8	NRCC-CXR-E is required
				☒	Not included	Solar and Battery 110.10	NRCC-SAB-E is required

CERTIFICATE OF COMPLIANCE - NONRESIDENTIAL PERFORMANCE COMPLIANCE METHOD	NRCC-PRF-E
Nonresidential Performance Compliance Method	(Page 3 of 15)

C1. COMPLIANCE SUMMARY

COMPLIES[3]			
	Time Dependent Valuaton (TDV)		Source Energy Use
	Efficiency[1] (kBtu/ft^2 - yr)	Total[2] (kBtu/ft^2 - yr)	Total[2] (kBtu/ft^2 - yr)
Standard Design	263.77	263.77	25.65
Proposed Design	226.35	226.35	19.25
Compliance Margins	37.42	37.42	6.4
	Pass	Pass	Pass

[1] Efficiency measures include improvements like a better building envelope and more efficient equipment
[2] Compliance Totals include efficiency, photovoltaics and batteries
[3] Building complies when efficiency and total compliance margins are greater than or equal to zero and unmet load hour limits are not exceeded

CERTIFICATE OF COMPLIANCE - NONRESIDENTIAL PERFORMANCE COMPLIANCE METHOD	NRCC-PRF-E
Nonresidential Performance Compliance Method	(Page 4 of 15)

C2. TDV ENERGY COMPLIANCE RESULTS FOR PERFORMANCE COMPONENTS (Annual TDV Energy Use, kBtu/ft^2 - yr)

COMPLIES[2]			
Energy Component	Standard Design (TDV)	Proposed Design (TDV)	Compliance Margin (TDV)[1]
Space Heating	11.72	15.7	-3.98
Space Cooling	62.54	55.22	7.32
Indoor Fans	126.03	92.58	33.45
Heat Rejection	0	0	0
Pumps & Misc.	0	0	0
Domestic Hot Water	11.81	11.18	0.63
Indoor Lighting	51.67	51.67	0
Flexibility	---	---	---
EFFICIENCY COMPLIANCE TOTAL	263.77	226.35	37.42 (14.2%)
Photovoltaics	---	---	---
Batteries	---	---	---
TOTAL COMPLIANCE	263.77	226.35	37.42 (14.2%)

[1] Notes: This number in parenthesis following the Compliance Margin in column 4, represents the Percent Better than Standard.

CERTIFICATE OF COMPLIANCE - NONRESIDENTIAL PERFORMANCE COMPLIANCE METHOD	NRCC-PRF-E
Nonresidential Performance Compliance Method	(Page 5 of 15)

C3. TDV ENERGY RESULTS FOR NON-REGULATED COMPONENTS[1]

Non-Regulated Energy Component	Standard Design (TDV)	Proposed Design (TDV)	Compliance Margin (TDV)[1]
Receptacle	79.44	79.44	---
Process	---	---	---
Other Ltg	---	---	---
Process Motors	---	---	---
TOTAL (TOTAL COMPLIANCE + NON-REGULATED COMPONENTS)	343.21	305.79	37.42 (10.9%)

[1] Notes: This table is not used for Energy Code Compliance.

CERTIFICATE OF COMPLIANCE - NONRESIDENTIAL PERFORMANCE COMPLIANCE METHOD	NRCC-PRF-E
Nonresidential Performance Compliance Method	(Page 6 of 15)

C4. SOURCE ENERGY COMPLIANCE RESULTS FOR PERFORMANCE COMPONENTS (Annual SOURCE Energy Use, kBtu/ft^2 /yr)

COMPLIES[2]			
Energy Component	Standard Design (SOURCE)	Proposed Design (SOURCE)	Compliance Margin (SOURCE)[1]
Space Heating	3.77	2.41	1.36
Space Cooling	2.7	2.58	0.12
Indoor Fans	12.57	9.4	3.17
Heat Rejection	0	0	0
Pumps & Misc.	0	0	0
Domestic Hot Water	2.48	0.73	1.75
Indoor Lighting	4.13	4.13	0
Flexibility	---	---	---
EFFICIENCY COMPLIANCE TOTAL	25.65	19.25	6.4 (25%)
Photovoltaics	---	---	---
Batteries	---	---	---
TOTAL COMPLIANCE	25.65	19.25	6.4 (25%)

[1] Notes: This number in parenthesis following the Compliance Margin in column 4, represents the Percent Better than Standard.

CERTIFICATE OF COMPLIANCE - NONRESIDENTIAL PERFORMANCE COMPLIANCE METHOD	NRCC-PRF-E
Nonresidential Performance Compliance Method	(Page 7 of 15)

C5. SOURCE ENERGY RESULTS FOR NON-REGULATED COMPONENTS[1]

Non-Regulated Energy Component	Standard Design (SOURCE)	Proposed Design (SOURCE)	Compliance Margin (SOURCE)[1]
Receptacle	8.41	8.41	---
Process	---	---	---
Other Ltg	---	---	---
Process Motors	---	---	---
TOTAL (TOTAL COMPLIANCE + NON-REGULATED COMPONENTS)	34.06	27.66	6.4 (18.8%)

[1] Notes: This table is not used for Energy Code Compliance.

C6. 'ABOVE CODE' QUALIFICATIONS

☐ This project is pursuing CalGreen Tier 1 ☐ This project is pursuing CalGreen Tier 2

CERTIFICATE OF COMPLIANCE - NONRESIDENTIAL PERFORMANCE COMPLIANCE METHOD	NRCC-PRF-E
Nonresidential Performance Compliance Method	(Page 8 of 15)

C7. ENERGY USE SUMMARY

Energy Component	Standard Design Site (MWh)	Proposed Design Site (MWh)	Margin (MWh)	Standard Design Site (MBtu)	Proposed Design Site (MBtu)	Margin (MBtu)
Space Heating	---	2.3	---	18.1	---	---
Space Cooling	8.1	7.2	0.9	---	---	---
Indoor Fans	19.7	14.5	5.2	---	---	---
Heat Rejection	---	---	---	---	---	---
Pumps & Misc.	---	---	---	---	---	---
Domestic Hot Water	1.1	2	-0.9	9.7	---	---
Indoor Lighting	9	9	0	---	---	---
Flexibility	---	---	---	---	---	---
EFFICIENCY TOTAL	37.9	35	2.9	27.8	0	27.8
Photovoltaics	---	---	---	---	---	---
Batteries	---	---	---	---	---	---
ENERGY USE SUBTOTAL	37.9	35	2.9	27.8	0	27.8
Receptacle	12.7	12.7	0	13.5	13.5	0
Process	---	---	---	---	---	---
Other Ltg	---	---	---	---	---	---
Process Motors	---	---	---	---	---	---
ENERGY USE TOTAL	50.6	47.7	2.9	41.3	13.5	27.8

CERTIFICATE OF COMPLIANCE - NONRESIDENTIAL PERFORMANCE COMPLIANCE METHOD	NRCC-PRF-E
Nonresidential Performance Compliance Method	(Page 9 of 15)

C8. ENERGY USE INTENSITY (EUI)

	Standard Design (kBtu/ft^2 / yr)	Proposed Design (kBtu/ft^2 / yr)	Margin (kBtu/ft^2 / yr)	Margin Percentage
GROSS EUI[1]	48.59	40.03	8.56	17.62
NET EUI[1]	48.59	40.03	8.56	17.62

[1] Notes: Gross EUI is Energy Use Total (not including PV)/Total Building Area. Net EUI is Energy Use Total (including PV)/Total Building Area.

F1. REQUIRED PV SYSTEMS

01	02	03	04	05	06	07	08	09	10	11	12
DC System Size (kWdc)	Exception[1]	Module Type	Array Type	Power Electronics	CFI	Azimuth (deg)	Tilt Input	Array Angle (deg)	Tilt: (x in 12)	Inverter Eff. (%)	Annual Solar Access (%)

[1]See Table D1 for any PV exceptions used.

F1B. PV BATTERY BUILDING TYPE(S)

01	02	03
Building Occupancy Type* (From Table 140.10-A/B and 170.2-U/V)	Conditioned Floor Area (ft^2)	Unconditioned Floor Area (ft^2)
Grocery	0	0
High-Rise Multifamily	0	0
Office, Financial Institutions, Unleased Tenant Space	4402.9	0
Retail	0	0
School	0	0
Warehouse	0	0
Auditorium, Convention Center, Hotel/Motel, Library, Medical Office Building/Clinic, Restaurant, Theater	0	0
None	0	0

**Building Occupancy Types are defined in Section 100.1 of the Energy Code*

NDAA group architects
4990 N Harbor Drive, Ste 201
San Diego, CA 92106
tel: 619-297-8066
web: www.ndaainc.com

DO NOT SCALE DRAWINGS.
ANY DISCREPANCIES TO BE REVIEWED WITH THE ARCHITECT.

SAN DIEGO FAMILY DERMATOLOGY
222 W. MADISON AVE.
EL CAJON, CA 92020

REVISION SCHEDULE

NO	DATE	ISSUE
1	7/24/2023	1ST CITY REVISION

Project No: 23011
Project Start Date: Issue Date
Drawn: C. Moya
Checked: W. Toliver
Revision:
Sheet Name:

ENERGY CODE FORMS

Scale: NONE
Sheet No:

EN-101

7/26/2023

H9. NONRESIDENTIAL / COMMON USE AREA & HOTEL/MOTEL VENTILATION

01	02	03	04	05	06	07
Zone Name	Mechanical Ventilation				Conditioned Area (sf)	DCV or Occupant Sensor Controls, or Both
	Ventilation Function	# of People	Supply OA CFM	Exhaust CFM		
3-Corridor	General - Corridors Misc - All others	8.74	212.5	0	1184	N/A
4-Exam	Misc - All others Office - Office space	4.11	123.25	0	821.7	N/A

H11. ZONAL SYSTEM AND TERMINAL UNIT SUMMARY

01	02	03	04	05	06	07	08	09	10	11	12
System ID	System Type	Qty	Rated Capacity (kBtuh)		Airflow (cfm)			Fan			VSD
			Heating	Cooling	Design	Min.	Min. Ratio	Power	Power Units	Cycles	
1-Restrooms-Trm	Uncontrolled	1	N/A	N/A	1,100	N/A	0	N/A	N/A	N/A	☐
2-Restroom-Trm	Uncontrolled	1	N/A	N/A	1,600	N/A	0	N/A	N/A	N/A	☐
3-Corridor-Trm	Uncontrolled	1	N/A	N/A	1,100	N/A	0	N/A	N/A	N/A	☐
4-Exam-Trm	Uncontrolled	1	N/A	N/A	1,100	N/A	0	N/A	N/A	N/A	☐

I1. WATER HEATER EQUIPMENT SUMMARY

01	02	03	04	05	06	07	08	09	10	11	12	13	14
Name	Heater Element Type	Tank Type	Qty	Tank Vol (gal)	Rated Input	Rated Input Unit	Efficiency	Efficiency Unit	Tank Insulation R-value Int/Ext	Standby Loss Fraction	1st Hr. Rating or Flow Rate (gal)	Heat Pump Type	Tank Location or Ambient Condition
Rheem PROE36 S2 RH952	Electricity	Storage	1	33	4.51	kW	0.92	UEF	N/A	N/A	N/A	N/A	N/A

H5. GENERAL EXHAUST FAN SUMMARY

01	02	03	04	05	06	07	08
System ID	Zone Name	Qty	CFM	Power	Power Units	Continuous Operation?	Status[1]
Restrooms3	1-Restrooms	1	275	0.08	BHP	No	E
Restroom29	2-Restroom	1	275	0.08	BHP	No	E

[1] Status: N - New, A - Altered, E - Existing

H8. SYSTEM SPECIAL FEATURES

01	02	03	04
System Name	Equipment Type	Interlocks per 140.4(n)[1]	Other Special Features and Controls
WH-11 - SHW	Service Hot Water	N/A	Fixed Temperature Control

Notes: This table includes controls related to the performance path only. For projects using the prescriptive path, mandatory and prescriptive controls requirements are documented on the NRCC-MCH-E.

[1] Yes = interlocks are provided, No = interlocks are not provided, NA means no operable openings.

H9. NONRESIDENTIAL / COMMON USE AREA & HOTEL/MOTEL VENTILATION

01	02	03	04	05	06	07
Zone Name	Mechanical Ventilation				Conditioned Area (sf)	DCV or Occupant Sensor Controls, or Both
	Ventilation Function	# of People	Supply OA CFM	Exhaust CFM		
1-Restrooms	Exhaust - Toilets, public Office - Reception areas Misc - All others General - Corridors	8.65	176.63	275	1099.2	N/A
2-Restroom	Exhaust - Toilets, public General - Corridors Office - Office space Misc - All others Office - Reception areas	22.43	372.89	275	1298	N/A

H1. DRY SYSTEM EQUIPMENT (FURNACES, AIR HANDLING UNITS, HEAT PUMPS, VRF, ECONOMIZERS ETC.)

01	02	03	04	05	06	07	08	09	10	11	12
Equipment Name	Equipment Type	Qty	Heating				Cooling			Economizer Type (if present)	Status[1]
			Total Heating Output (kBtu/h)	Supp Heat Output (kBtu/h)	Efficiency Unit	Efficiency	Total Cooling Output (kBtu/h)	Efficiency Unit	Efficiency		
HP-1	Single Zone Heat Pump (SZHP) Air System	1	34.3	0	N/A	NA	35.3	EER SEER	12.5 16	No Economizer	N
HP-2	Single Zone Heat Pump (SZHP) Air System	1	44.9	0	N/A	NA	46.2	EER SEER	12.5 16	No Economizer	N
HP-3	Single Zone Heat Pump (SZHP) Air System	1	34.3	0	N/A	NA	35.3	EER SEER	12.5 16	No Economizer	N
HP-4	Single Zone Heat Pump (SZHP) Air System	1	34.3	0	N/A	NA	35.3	EER SEER	12.5 16	No Economizer	N

[1] Status: N - New, A - Altered, E - Existing

H3. NONRESIDENTIAL / COMMON USE AREA FAN SYSTEMS SUMMARY

01	02	03	04	05	06	07	08	09	10	11	12	13
Name or Item Tag	Qty	Design OA CFM	Supply Fan				Return / Relief Fan					Status[1]
			CFM	Power	Power Units	Control	Fan Type	CFM	Power	Power Units	Control	
HP-1	1	176.63	1,100	0.5	BHP	Constant Vol	N/A	N/A	N/A	N/A	N/A	N
HP-2	1	372.89	1,600	0.75	BHP	Constant Vol	N/A	N/A	N/A	N/A	N/A	N
HP-3	1	212.5	1,100	0.5	BHP	Constant Vol	N/A	N/A	N/A	N/A	N/A	N
HP-4	1	123.25	1,100	0.5	BHP	Constant Vol	N/A	N/A	N/A	N/A	N/A	N

[1] Status: N - New, A - Altered, E - Existing

K1. INDOOR CONDITIONED LIGHTING GENERAL INFO

01	02	03	04	05	06
Occupancy Type[1]	Conditioned Floor Area[2] (ft^2)	Installed Lighting Power (Watts)	Lighting Control Credits (Watts)	Additional (Custom) Allowance	
				Area Category Footnotes (Watts)	Area Category Footnotes (Watts)
Corridor	1061	424.4	0	0	0
Hospital - Exam/Treatment	1368.6	1573.89	0	0	0
Hospital - Nurse Station	145.4	123.59	0	0	0
Lounge	773.6	425.48	0	0	0
Office (250 square feet)	318.6	191.16	0	0	0
Office (250 square feet)	429.4	279.11	0	0	0
Restroom	306.3	199.1	0	0	0
Building Totals:	4402.9	3216.73	0	0	0

[1]See Table 140.6-C
[2]See NRCC-LTI–E for unconditioned spaces
[3]Lighting information for existing spaces modeled is not included in this table

K4. INDOOR CONDITIONED LIGHTING MANDATORY LIGHTING CONTROL

See NRCC-LTI-E for mandatory controls

L. DECLARATION OF REQUIRED CERTIFICATES OF INSTALLATION

Selections made by Documentation Author indicate which Certificates of Installation must be submitted for the features to be recognized for compliance. These documents must be retained and provided to the building inspector during construction and can be found online

Building Component	Form/Title
Envelope	NRCI-ENV-01-E - Must be submitted for all buildings
Mechanical	NRCI-MCH-01-E - Must be submitted for all buildings
Mechanical	NRCI-MCH-E - For all buildings with Mechanical Systems
Plumbing	NRCI-PLB-01-E - Must be submitted for all buildings

L. DECLARATION OF REQUIRED CERTIFICATES OF INSTALLATION

Selections made by Documentation Author indicate which Certificates of Installation must be submitted for the features to be recognized for compliance. These documents must be retained and provided to the building inspector during construction and can be found online

Building Component	Form/Title
Plumbing	NRCI-PLB-E - For all buildings with Plumbing Systems
Indoor Lighting	NRCI-LTI-E - Indoor Lighting (for all buildings)

M. DECLARATION OF REQUIRED CERTIFICATES OF ACCEPTANCE

Selections made by Documentation Author indicate which Certificates of Acceptance must be submitted for the features to be recognized for compliance. These documents must be provided to the building inspector during construction and must be completed through an Acceptance Test Technician Certification Provider (ATTCP).

Building Component	Form/Title
Envelope	NRCA-ENV-02-F - NRFC label verification for fenestration
Mechanical	NRCA-MCH-02-A - Outdoor Air must be submitted for all newly installed HVAC units. Note: MCH-02-A can be performed in conjunction with MCH-07-A Supply Fan VFD Acceptance (if applicable) since testing activities overlap
Mechanical	NRCA-MCH-03-A - Constant Volume Single Zone HVAC
Mechanical	NRCA-MCH-04(a)-H - Air Distribution Duct Leakage - HERS Verification required

N. DECLARATION OF REQUIRED CERTIFICATES OF VERIFICATION

Selections made by Documentation Author indicate which Certificates of Verification must be submitted for the features to be recognized for compliance. These documents must be retained and provided to the building inspector during construction and can be found online

There are no Certificates of Verification applicable to this project

Documentation Author's Declaration Statement

1. I certify that this Certificate of Compliance documentation is accurate and complete.

Documentation Author Name: Craig Moya	Documentation Author Signature:
Company: Engineered Systems	Signature Date:
Address: PO Box 2186	CEA/HERS Certification Identification (if applicable):
City/State/Zip: Spring Valley, CA 91979	Phone: 619-825-7516

Responsible Person's Declaration statement

I certify the following under penalty of perjury, under the laws of the State of California:

1. The information provided on this Certificate of Compliance is true and correct.
2. I am eligible under Division 3 of the Business and Professions Code to accept responsibility for the building design or system design identified on this Certificate of Compliance (responsible designer)
3. The energy features and performance specifications, materials, components, and manufactured devices for the building design or system design identified on this Certificate of Compliance conform to the requirements of Title 24, Part 1 and Part 6 of the California Code of Regulations.
4. The building design features or system design features identified on this Certificate of Compliance are consistent with the information provided on other applicable compliance documents, worksheets, calculations, plans and specifications submitted to the enforcement agency for approval with this building permit application.
5. I understand that a registered copy of this Certificate of Compliance shall be made available with the building permit(s) issued for the building, and made available to the enforcement agency for all applicable inspections, and I will take the necessary steps to accomplish this requirement.
6. I understand that a registered copy of this Certificate of Compliance is required to be included with the documentation the builder provides to the building owner at occupancy, and I will take the necessary steps to accomplish these requirements.

Responsible Designer Name: Joseph Holasek	Responsible Designer Signature:	
Company: NOAA Group		
Address: 4990 N. Harbor Dr.	Date Signed: 2023-07-26	
City/State/Zip: San Diego, CA 92106	License #: C19126	
Phone: 619-297-8066	Title: Architect	Scope:
Responsible Designer Name: William Toliver	Responsible Designer Signature:	
Company: Engineered Systems		
Address: PO Box 2186	Date Signed: 2023-07-26	
City/State/Zip: Spring Valley, CA 91979	License #: M29653	
Phone: 619-825-7516	Title: Mechanical Engineer	Scope:

NOAA group architects
4990 N Harbor Drive, Ste 201
San Diego, CA 92106
tel: 619-297-8066
web: www.noaginc.com

DO NOT SCALE DRAWINGS.
ANY DISCREPANCIES TO BE REVIEWED WITH THE ARCHITECT.

SAN DIEGO FAMILY DERMATOLOGY
222 W. MADISON AVE.
EL CAJON, CA 92020

REVISION SCHEDULE

NO	DATE	ISSUE
1	7/24/2023	1ST CITY REVISION

Project No: 23011
Project Start Date: Issue Date
Drawn: C. Moya
Checked: W. Toliver
Revision:
Sheet Name:

ENERGY CODE FORMS

Scale: NONE
Sheet No:

EN-102

7/26/2023

STATE OF CALIFORNIA
Domestic Water Heating System
CALIFORNIA ENERGY COMMISSION

CERTIFICATE OF COMPLIANCE			NRCC-PLB-E
Project Name:	San Diego Family Dermatology	Report Page:	(Page 3 of 6)
Project Address:	222 W. Madison Ave.	Date Prepared:	7/26/2023

G. DOMESTIC HOT WATER DISTRIBUTION SYSTEM

This table is used to demonstrate compliance for nonresidential occupancies with distribution requirements in 120.3 and 140.5. For multifamily and hotel/motel occupancies, compliance is demonstrated with requirements 110.3(c), 160.4, 170.2(d).

Mandatory Pipe Insulation All Occupancies

13	☐	For systems serving dwelling units, pipe insulation must meet the minimum insulation requirements in Table 160.4-A (see blow) except: • Piping that penetrates framing members shall not be required to have pipe insulation for the distance of the framing penetration. Piping that penetrates metal framing shall use grommets, plugs, wrapping or other insulating material to assure that no contact is made with the metal framing. Insulation shall abut securely against all framing members • Piping installed in interior or exterior walls shall not be required to have pipe insulation if all of the requirements are met for compliance with Quality Insulation Installation (QII) as specified in the Reference Residential Appendix RA3.5. • Piping surrounded with a minimum of 1 inch of wall insulation, 2 inches of crawlspace insulation, or 4 inches of attic insulation, shall not be required to have pipe insulation.
14	☒	For systems serving nonresidential spaces, pipe insulation for the following applications is specified to comply with Table 120.3-A (see below) per 120.3: • Recirculating system piping, including supply and return piping of the water heater • The first 8 ft of hot and cold outlet piping, including between storage tank and heat trap, for a nonrecirculating storage system • Pipes that are externally heated
15	☐	Insulation shall be protected from damage, including that due to sunlight, moisture, equipment maintenance, and wind. Insulation exposed to weather shall be installed with a cover suitable for outdoor service per 120.3(b) / 160.4(f). Pipe insulation buried below grade must be installed in a water proof and non-crushable casing or sleeve.

TABLE 120.3-A / 160.4-A PIPE INSULATION THICKNESS

Fluid Temperature Range (°F)	Conductivity Range (Btu-in per hour per ft² per °F)	Insulation Mean Rating Temp (°F)	Nominal Pipe Diameter (in)			
			< 1	1 to < 1.5	1.5 to < 4	1.5 to < 4 Multifamily & Hotel/Motel
			Minimum Insulation Required			
105-140	0.22 - 0.28	100	1.0 in or R-7.7	1.5 in or R-12.5	1.5 in or R-11	2.0 in or R-16

Registration Number:
CA Building Energy Efficiency Standards - 2022 Nonresidential Compliance
Generated Date/Time:
Report Version: 2022.0.000
Schema Version: rev 20220101
Documentation Software: EnergyPro
Compliance ID: EnergyPro-3219-0723-0030
Report Generated: 2023-07-26 16:52:30

STATE OF CALIFORNIA
Domestic Water Heating System
CALIFORNIA ENERGY COMMISSION

CERTIFICATE OF COMPLIANCE			NRCC-PLB-E
Project Name:	San Diego Family Dermatology	Report Page:	(Page 2 of 6)
Project Address:	222 W. Madison Ave.	Date Prepared:	7/26/2023

E. ADDITIONAL REMARKS

This table includes remarks made by the permit applicant to the Authority Having Jurisdiction.

F. DOMESTIC HOT WATER EQUIPMENT

This table is used to demonstrate compliance with mandatory equipment requirements in 110.1 and 110.3. Compliance with prescriptive requirements in 140.5(c) / 170.2(d) must also be demonstrated and with 141.0 / 180.1/ 180.2 for addition and alteration scopes.

Equipment Schedule: Water Heating Efficiency and Standby Loss

03	04			05		06		
System Name	Rheem PROE36 S2 RH95	Exception to 140.5(c)/ 170.2(d)3		☐	Gas Service Water Heating System >= 1MMBtu/h[1]	Capacity-weighted Average Efficiency %		
07	08	09	10		11	12	13	14	15
Name or Item Tag	Equipment Type	Volume (gal)	Rated Input Capacity (Btu/h)	Max GPM/ First Hour Rating (FHR)	Rated Efficiency	Minimum Efficiency Required	Efficiency Unit	Designed Standby Loss	Maximum Standby Loss
Rheem PROE36 S2 RH95	Consumer Rated Electric Storage	33	15,388	18 <= FHR <51	0.92	0.85	UEF		

[1] FOOTNOTE: In systems >= 1MMBtu/h with multiple units, gas water heaters with input capacity > 100,000 Btu/h may meet 90% Et requirements via an input capacity-weighted average.

Water Heating Equipment All Occupancies

	Yes	No	Not Applicable	Requirement
18	☐	☐	☒	Unfired storage tank insulation shall have Internal + External >=R-16 OR External >=R-3.5. Label required per 110.3(c)3
19	☐	☐	☒	New state buildings 60% of energy for service water heating from site solar energy or recovered energy per 110.3(c)5
20	☐	☐	☒	Isolation valves for instantaneous water heater with input rating >6.8 kBTUH or 2 kW has been specified per 110.3(c)6
21	☐	☐	☒	School buildings < 25,000 ft² and < 4 stories must install a heat pump water heating system per 140.5(a)1. Water heating systems serving an individual bathroom space may be an instantaneous electric water heater.

Registration Number:
CA Building Energy Efficiency Standards - 2022 Nonresidential Compliance
Generated Date/Time:
Report Version: 2022.0.000
Schema Version: rev 20220101
Documentation Software: EnergyPro
Compliance ID: EnergyPro-3219-0723-0030
Report Generated: 2023-07-26 16:52:30

STATE OF CALIFORNIA
Domestic Water Heating System
CALIFORNIA ENERGY COMMISSION

CERTIFICATE OF COMPLIANCE			NRCC-PLB-E
Project Name:	San Diego Family Dermatology	Report Page:	(Page 1 of 6)
Project Address:	222 W. Madison Ave.	Date Prepared:	7/26/2023

This document is used to demonstrate compliance for nonresidential occupancies with requirements in 110.1, 110.3, 120.3, and 140.5, and with requirements in 141.0 for additions and alterations, for domestic water heating scopes using the prescriptive path. For high-rise residential and hotel/motel occupancies compliance is demonstrated with requirements in 110.1, 110.3, 160.4 and 170.2(d), and with requirements 180.1 for additions and 180.2 for alterations.

A. GENERAL INFORMATION

01	Project Location (city)	El Cajon	02	Climate Zone	10
03	Occupancy Types Within Project (select all that apply):				

• Healthcare Facility • Office • Support Areas • All Other Occupancies

B. PROJECT SCOPE

This table includes domestic water heating systems that are within the scope of the permit application and are demonstrating compliance using the prescriptive paths outlined in 140./ 170.2(d) and 141.0(d)/ 180.1, or 141.0(b)2N / 180.2 for additions or alterations. Solar water heating systems are documented on the NRCC-SAB compliance document. Combined hydronic water heating systems are documented on the NRCC-MCH compliance document.

01	02	03		
My project consists of (check all that apply):	System Type[1,2]	System Components		
☒ New system (DHW system being installed for the first time in newly constructed building)	Individual System (serving nonresidential spaces)	☒ Equipment	☒ Distribution	☒ Controls
☐ System Alteration (equipment, distribution or controls)		☐ Equipment	☐ Distribution	☐ Controls

[1] FOOTNOTES: Point of use water heaters, or other non-central systems used to serve nonresidential spaces, are considered individual systems.
[2] Dwelling units refers to hotel/motel guest rooms and units in a multifamily residential occupancy.
[3] DHW systems serving 2 or more dwelling units are considered "Central Systems" for multifamily occupancies

C. COMPLIANCE RESULTS

Table C will indicate if the project data input into the compliance document is compliant with water heating requirements. If this table says "DOES NOT COMPLY" or "COMPLIES with Exceptional Conditions" refer to Table D. or the table indicated as not compliant for guidance.

01	02	03	04
Domestic Hot Water Equipment	Distribution Systems	Controls	Compliance Results
Table F	Table G	Table H	
Yes	Yes	Yes	COMPLIES

D. EXCEPTIONAL CONDITIONS

This table is auto-filled with uneditable comments because of selections made or data entered in tables throughout the form.

Registration Number:
CA Building Energy Efficiency Standards - 2022 Nonresidential Compliance
Generated Date/Time:
Report Version: 2022.0.000
Schema Version: rev 20220101
Documentation Software: EnergyPro
Compliance ID: EnergyPro-3219-0723-0030
Report Generated: 2023-07-26 16:52:30

STATE OF CALIFORNIA
Domestic Water Heating System
CALIFORNIA ENERGY COMMISSION

CERTIFICATE OF COMPLIANCE			NRCC-PLB-E
Project Name:	San Diego Family Dermatology	Report Page:	(Page 4 of 6)
Project Address:	222 W. Madison Ave.	Date Prepared:	7/26/2023

H. DOMESTIC HOT WATER CONTROLS

This table is used to demonstrate compliance with control requirements in 110.3 for all occupancies. For multifamily residential and hotel/motel occupancies, compliance is also demonstrated with requirements in 160.4(e) / 170.2(d).

	Yes	No	Not Applicable	Requirement
01	☒	☐	☐	Construction documents require manufacturer certification that service water-heating systems are equipped with automatic temperature controls capable of adjusting temperature settings per 110.3(a).
02	☐	☐	☒	Systems with capacity > 167,000 BTUH equipped with outlet temperature controls per 110.3(c)1 unless covered by California Plumbing Code 613.0.
03	☐	☐	☒	Controls for circulating pumps or electrical heat trace systems are capable of automatically turning off the system per §110.3(c)2 unless systems serves healthcare facility.
04	☐	☐	☒	For recirculation systems serving multiple dwelling units, design includes automatic pump controls per 170.2(d) or 180.1(b)3 for additions.
05	☐	☐	☒	For recirculation systems serving individual dwelling units, design includes manual on/off controls as specified in Reference Appendix RA4.4.9 per 170.2(d).
06	☐	☐	☒	Combustion air positive shut-off shall be provided per 160.4(3).on all newly installed commercial boilers as follows: • Boilers with input capacity >= 2.5 MMBtu/h, in which the boiler is designed to operate with a nonpositive vent static pressure • Boilers where one stack serves two or more boilers with a total combined input capacity per stack of 2.5 MMBtu/h.
07	☐	☐	☒	Boiler combustion air fans with motor >= 10 hp shall meet one of the following • The fan motor shall be driven by a variable speed drive OR • The fan motor shall include controls that limit the fan motor demand to <=30% of the total design wattage at 50% of the design air volume.
08	☐	☐	☒	Newly installed boilers with an input capacity (d:gte/) 5MMBtu/h and a steady state full-load combustion efficiency < 90% shall maintain excess (stack-gas) oxygen concentrations <= 5% by volume on a dry basis over firing rates of 20-100%. Combustion air volume shall be controlled with respect to firing rate or flue gas oxygen concentration. Use of a common gas and combustion air control linkage or jack shaft is prohibited.

I. DECLARATION OF REQUIRED CERTIFICATES OF INSTALLATION

Form/Title
NRCI-PLB-E - Must be submitted for all buildings

Registration Number:
CA Building Energy Efficiency Standards - 2022 Nonresidential Compliance
Generated Date/Time:
Report Version: 2022.0.000
Schema Version: rev 20220101
Documentation Software: EnergyPro
Compliance ID: EnergyPro-3219-0723-0030
Report Generated: 2023-07-26 16:52:30

STATE OF CALIFORNIA
Domestic Water Heating System
CALIFORNIA ENERGY COMMISSION

CERTIFICATE OF COMPLIANCE			NRCC-PLB-E
Project Name:	San Diego Family Dermatology	Report Page:	(Page 5 of 6)
Project Address:	222 W. Madison Ave.	Date Prepared:	7/26/2023

J. DECLARATION OF REQUIRED CERTIFICATES OF ACCEPTANCE

There are no forms required for this project.

K. DECLARATION OF REQUIRED CERTIFICATES OF VERIFICATION

There are no forms required for this project.

Registration Number:
CA Building Energy Efficiency Standards - 2022 Nonresidential Compliance
Generated Date/Time:
Report Version: 2022.0.000
Schema Version: rev 20220101
Documentation Software: EnergyPro
Compliance ID: EnergyPro-3219-0723-0030
Report Generated: 2023-07-26 16:52:30

STATE OF CALIFORNIA
Domestic Water Heating System
CALIFORNIA ENERGY COMMISSION

CERTIFICATE OF COMPLIANCE			NRCC-PLB-E
Project Name:	San Diego Family Dermatology	Report Page:	(Page 6 of 6)
Project Address:	222 W. Madison Ave.	Date Prepared:	7/26/2023

DOCUMENTATION AUTHOR'S DECLARATION STATEMENT

I certify that this Certificate of Compliance documentation is accurate and complete.

Documentation Author Name: Craig Moya	Documentation Author Signature:
Company: Engineered Systems	Signature Date: 2023-07-26
Address: PO Box 2186	CEA/ HERS Certification Identification (if applicable):
City/State/Zip: Spring Valley CA 91979	Phone: 619-825-7516

RESPONSIBLE PERSON'S DECLARATION STATEMENT

I certify the following under penalty of perjury, under the laws of the State of California:

1. The information provided on this Certificate of Compliance is true and correct.
2. I am eligible under Division 3 of the Business and Professions Code to accept responsibility for the building design or system design identified on this Certificate of Compliance (responsible designer)
3. The energy features and performance specifications, materials, components, and manufactured devices for the building design or system design identified on this Certificate of Compliance conform to the requirements of Title 24, Part 1 and Part 6 of the California Code of Regulations.
4. The building design features or system design features identified on this Certificate of Compliance are consistent with the information provided on other applicable compliance documents, worksheets, calculations, plans and specifications submitted to the enforcement agency for approval with this building permit application.
5. I will ensure that a completed signed copy of this Certificate of Compliance shall be made available with the building permit(s) issued for the building, and made available to the enforcement agency for all applicable inspections. I understand that a completed signed copy of this Certificate of Compliance is required to be included with the documentation the builder provides to the building owner at occupancy.

Responsible Designer Name: William Toliver	Responsible Designer Signature:
Company: Engineered Systems	Date Signed: 2023-07-26
Address: PO Box 2186	License: M29653
City/State/Zip: Spring Valley CA 91979	Phone: 619-825-7516

Registration Number:
CA Building Energy Efficiency Standards - 2022 Nonresidential Compliance
Generated Date/Time:
Report Version: 2022.0.000
Schema Version: rev 20220101
Documentation Software: EnergyPro
Compliance ID: EnergyPro-3219-0723-0030
Report Generated: 2023-07-26 16:52:30

NDAA group architects
4990 N Harbor Drive, Ste 201
San Diego, CA 92106
tel: 619-297-8066
web: www.ngagInc.com

DO NOT SCALE DRAWINGS.
ANY DISCREPANCIES TO BE REVIEWED WITH THE ARCHITECT.

SAN DIEGO FAMILY DERMATOLOGY
222 W. MADISON AVE.
EL CAJON, CA 92020

REVISION SCHEDULE		
NO	DATE	ISSUE
1	7/24/2023	1ST CITY REVISION

Project No: 23011
Project Start Date: Issue Date
Drawn: C. Moya
Checked: W. Toliver
Revision:
Sheet Name:

ENERGY CODE FORMS

Scale: NONE
Sheet No:

EN-103

7/26/2023

PLUMBING GENERAL NOTES

1. PLUMBING CONTRACTOR SHALL FURNISH ALL EQUIPMENT, MATERIALS, LABOR, ETC., WHETHER SHOWN ON THESE PLANS OR NOT, NECESSARY TO PROVIDE A COMPLETE, WORKABLE, CODE-APPROVED PLUMBING SYSTEM.
2. ALL WORK SHALL BE PERFORMED W/THE LATEST INDUSTRY ACCEPTED PRACTICES, CPC 2019 EDITION & ANY LOCAL ORDINANCES.
3. ALL WORK SHALL BE DONE IN ACCORDANCE WITH THESE PLANS AND SPECIFICATIONS.
4. PLUMBING CONTRACTOR TO COORDINATE ALL LINES & VENTS WITH ALL MECHANICAL EQUIPMENT. EACH PLUMBING VENT SHALL TERMINATE NOT LESS THAN 10 FT. FROM OR AT LEAST 3 FT. ABOVE ANY OPENING, AIR INTAKE OR VENT SHAFT.
5. WHERE PIPE LINES ENTER A WALL, CEILING OR FLOOR, THE OPENING AROUND THE LINE SHALL BE TIGHTLY SEALED.
6. SLOPE ALL HORIZONTAL WASTE & VENT LINES A MINIMUM OF 1/4" PER FOOT. SLOPE CONDENSATE DRAIN LINES A MINIMUM OF 1/8" PER FOOT.
7. ALL REQUIRED CLEANOUTS SHALL BE INSTALLED PER SECTIONS 707 & 719 OF PLUMBING CODE. CLEANOUTS ARE REQUIRED TO BE INSTALLED ABOVE (NOT BELOW) ALL URINALS PER CPC 707.4.
8. PLUMBING FIXTURES & FITTINGS SHALL COMPLY WITH ALL REQUIREMENTS IN SECTION 5.303 IN THE 2019 CALIFORNIA GREEN BUILDING CODE.
9. WATER CLOSETS SHALL USE A MAXIMUM ON 1.28 GPF. LAV FAUCETS SHALL HAVE A MAX. FLOW RATE OF 0.5 GPM AT 60 PSI & 0.2 GAL. PER CYCLE.
10. PER CPC 906.1, ABS/PVC VENT TERMINATIONS UP THRU ROOF EXPOSED TO SUNLIGHT ARE REQUIRED TO BE PROTECTED BY WATER BASED SYNTHETIC LATEX PAINTS.
11. INSULATE ALL EXPOSED HOT WATER & WASTE PIPING UNDER LAVATORIES & ACCESSIBLE SINKS WITH "HANDYSHIELD" OR APPROVED EQUAL.

PLUMBING SYMBOL LEGEND

SYMBOL	ABBREV.	DESCRIPTION
— — — —	W	WASTE PIPING BELOW FLOOR OR GRADE
————	W	WASTE PIPING ABOVE FLOOR
— —XW— —	XW	EXISTING WASTE PIPING BELOW GRADE
– – – – – – –	V	VENT
——— · ———	CW	COLD WATER ABOVE GRADE
— - —— - —	CW	COLD WATER BELOW GRADE
— – – —— – – —	HW	HOT WATER
——— ·· ———	TW	TEMPERED (105°F) WATER
——CD——	CD	CONDENSATE DRAIN
——PCD——	PCD	PUMPED CONDENSATE DRAIN
——G——	G	NATURAL GAS (7" W.C.)
– – –XG– – –	XG	EXISTING NATURAL GAS
	S.O.V.	SHUT-OFF VALVE
	CK.V.	CHECK VALVE
Ø	C.C.O.	CLEANOUT AT GRADE
Ø	F.C.O.	FLOOR CLEANOUT
	W.C.O.	WALL CLEANOUT
	V.T.R.	VENT THRU ROOF
	I.E.	INVERT ELEVATION
	A.F.F.	ABOVE FINISHED FLOOR

PLUMBING FIXTURE SCHEDULE

MARK	FIXTURE	DESCRIPTION	MINIMUM CONNECTION SIZE					REMARKS	QTY.	F.U. EACH		F.U. TOTAL	
			TRAP	W	V	CW	HW			W	CW	W	CW
WC 1	ADA WATER CLOSET	KOHLER K-3999-0, FLOOR MOUNT, FLUSH TANK, K-4636 SEAT	INT.	4"	2"	1/2"		1.28 GPF, ELONGATED, 16.5" RIM HEIGHT, 1/4-TURN S/S STOP W/BRAID.	3	4	2.5	12	7.5
U 1	URINAL	KOHLER K-5452-ET-0, WALL MOUNT SLOAN ROYAL 186-0.125-DBP VALVE	INT.	2"	1-1/2"	3/4"		0.125 GPF, WASHDOWN	1	2	4	2	4
L 1	LAVATORY	KOHLER K-2007, WALL MTD., VIT. CH. CHICAGO 802-V665ABCP FAUCET K-8998-CP ADJUSTABLE P-TRAP	1-1/2"	2"	1-1/2"	1/2"	1/2" TW	21"x18", PUSH HANDLES, METERED SELF-CLOSE, 0.2 GAL./CYCLE, 1/4-TURN S/S ANGLE STOPS W/BRAIDED LINES	3	1	1	3	3
SK 1	EXAM ROOM SINK	JUST SL-ADA-2119-A-GR, 18 GA. S/S CHICAGO 845-317ABCP FAUCET J-ADA-35 FS DRAIN, JT-150 P-TRAP	1-1/2"	2"	1-1/2"	1/2"	1/2" TW	21"x19"x5.5", WRIST BLADE HANDLES, 110°F TEMP. LIMIT STOP, 1/4-TURN S/S ANGLE STOPS W/BRAIDED S/S LINES	5	3	1	15	5
SK 2	BREAK ROOM SINK	JUST SL-ADA-2125-A-GR, 18 GA. S/S CHICAGO 116-101AB-1 INFRA. FAUCET GUARDIAN 65022 EYEWASH, J-35 DN.	1-1/2"	2"	1-1/2"	1/2"	1/2" TW	21"x25"x5.5", SINGLE HOLE FAUCET W/O AERATOR, 121-F MIXING VLV., 1/4-TURN S/S ANGLE STOPS W/BRAID. S/S LINES	2	3	2	6	4
SK 3	HISTOTECH ROOM SINK	JUST SL-ADA-1815-A-GR, 18 GA. S/S CHICAGO 1100-E35-317ABCP FAUCET J-ADA-35 FS DRAIN, JT-150 P-TRAP	1-1/2"	2"	1-1/2"	1/2"	1/2" TW	18"x15"x5.5", WRIST BLADE HANDLES, 110°F TEMP. LIMIT STOP, 1/4-TURN S/S ANGLE STOPS W/BRAIDED S/S LINES	1	3	2	3	2
SK 4	PHOTO ROOM SINK	AS SELECTED BY OWNER - -	1-1/2"	2"	1-1/2"	1/2"	1/2" TW	- - -	1	3	2	3	2
MS 1	MOP SINK	FIAT MSB-2424, MOLDED STONE CHICAGO 897-CP FAUCET	2"	2"	2"	1/2"	1/2"	24"x24", VACUUM BREAKER C.P. SUPPLIES W/STOPS, P-TRAP	1	3	2	3	2
DF 1	DRINKING FOUNTAIN	HAWS 1119-1920HO ADA DUAL WALL MOUNT, MOTION ACT. BOTTLE FILLER 6700.4 WALL MOUNTING PLATE				1/2"		18 GA., 304 SATIN FINISH STAINLESS C.P. BRASS BUBBLERS, 1 GPM FILLER FLOW	1	1	1	1	1
FD 1	FLOOR DRAIN	MIFAB F1000, CAST IRON BODY NICKEL-BRONZE GRATE	2"	2"	1-1/2"			- -	3	2		6	
RS 1	RECIRC. STATION	POWERS LFPSDBOB, 1" OUTLET, 30 GPM AT 10 PSI PRESSURE DROP				3/4"	3/4"	CIRC. PUMP, THERMOMETER, BALL VALVE, AQUA SENTRY 2 ALARM	1				
WH 1	WATER HEATER	RHEEM PROE36 S2 RH95, 33 GAL. (2) NON-SIMULT. 4.5 kW, 208V, 1 PH				3/4"	3/4"	23.2 GPH AT 80°F RISE, 0.92 UEF EXPANSION TANK, P&T RELIEF VALVE	1				
								TOTAL		54		30.5	

phone 619.825.7516
PO Box 2186
Spring Valley, CA 91979
project number 23011
ENGINEERED SYSTEMS
Consulting Engineers
engsysmail@gmail.com

CW PIPE SIZING TABLE

PIPE SIZE	MAX. F.U.	MAX. GPM	VELOCITY
1/2"	4	4	7.6 FPS
3/4"	13	11	8.0 FPS
1"	28	19	8.0 FPS
1-1/4"	50	29	8.0 FPS

TW PIPE SIZING TABLE

PIPE SIZE	MAX. F.U.	MAX. GPM	VELOCITY
1/2"	3.5	3.5	5.0 FPS
3/4"	7	7	5.0 FPS
1"	16	13	5.0 FPS

DOMESTIC WATER CALCULATION

MINIMUM AVAILABLE PRESSURE AT ALLEY	110 P.S.I.
PRESSURE REDUCING VALVE OUTLET PRESSURE	70 P.S.I.
HORIZONTAL DISTANCE, PRV TO FURTHEST FIXTURE	200 FT.
TOTAL DEVELOPED LENGTH, INCLUDING FITTINGS	267 FT.

STATIC PRESSURE LOSS
20 FT. X 0.43 P.S.I. / FT. 8.6 P.S.I.
MINIMUM REQ'D. PRESSURE AT FIXTURE 20.0 P.S.I.
TOTAL PRESSURE LOSS 28.6 P.S.I.
AVAILABLE PRESSURE 41.3 P.S.I.

41.3 P.S.I. X 100 / 267 FT. TOTAL DEVEL. LENGTH = 15.5 P.S.I. / 100 FT.

COLD WATER MAXIMUM VELOCITY = 8 FEET PER SECOND
HOT WATER MAXIMUM VELOCITY = 5 FEET PER SECOND

COLD WATER FIXTURE UNITS = 50 = 29 GPM

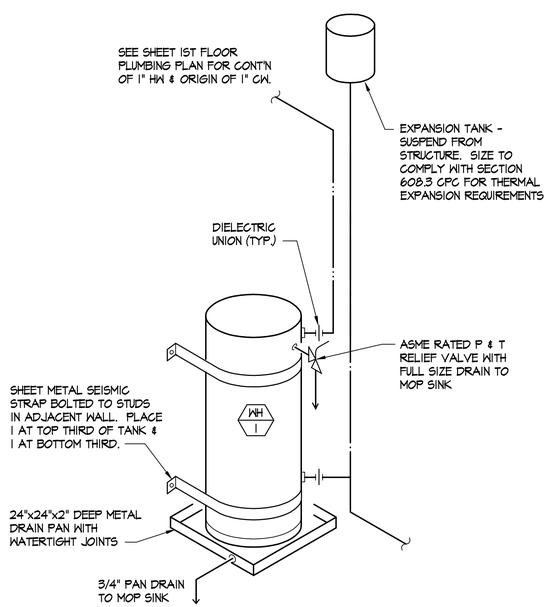

1 WATER HEATER DETAIL
P-101 | P-100 NO SCALE

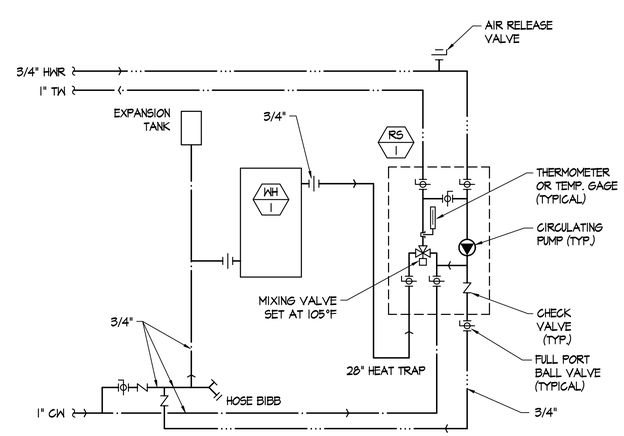

2 HOT WATER PIPING DIAGRAM
P-101 | P-100 NO SCALE

MATERIAL LIST

SANITARY SOIL, WASTE AND VENT SYSTEMS:
SERVICE WEIGHT NO-HUB CAST IRON PIPE & FITTINGS WITH STAINLESS STEEL COUPLINGS. SCHEDULE 40 ABS PIPE & FITTINGS MAY BE USED BELOW SLAB, IF ALLOWED BY LOCAL AUTHORITIES.

WATER PIPING ABOVE SLAB:
TYPE "L" HARD DRAWN COPPER TUBING WITH WROUGHT COPPER FITTINGS. USE 95/5 SOLDER.

WATER PIPING BELOW GRADE OUTSIDE BUILDING:
SCHEDULE 80 PVC WITH PVC FITTINGS.

CONDENSATE DRAINS:
SCHEDULE 40 PVC WITH PVC FITTINGS.

NATURAL GAS PIPING:
SCHEDULE 40 BLACK STEEL WITH MALLEABLE IRON FITTINGS.

INSULATION:
ALL HOT WATER PIPING SHALL BE INSULATED WITH FIBERGLASS PIPE INSULATION WITH A SEALED VAPOR BARRIER, OWENS-CORNING ASJ-SSL OR APPROVED EQUAL. AIR CONDITIONING CONDENSATE DRAIN PIPING SHALL BE INSULATED WITH JOHNS-MANVILLE "AEROTUBE" CELLULAR PLASTIC FOAM PIPE INSULATION.
INSULATION THICKNESS SHALL BE AS FOLLOWS:
1/2" PIPE - 1/2" THICK INSULATION
3/4" PIPE - 1" THICK INSULATION
1" TO 1-1/2" PIPE - 1-1/2" THICK INSULATION

CLEANOUTS:
INSTALL AS SHOWN ON PLANS PER SECTIONS 406 & 1107 OF THE U.P.C. AS MANUFACTURED BY J.R. SMITH, ZURN OR JOSAM AS FOLLOWS:
A. FINISHED ROOM FLOORS: J.R. SMITH 4163 W/NICKEL-BRONZE TOP AND GASKETED WATERTIGHT COVER.
B. WALLS: J.R. SMITH 4532 W/BRONZE PLUG AND CHROME PLATED COVER.

NDAA group
architects
4990 N Harbor Drive, Ste 201
San Diego, CA 92106
tel: 619-297-8066
web: www.nnaainc.com

REGISTERED PROFESSIONAL ENGINEER
WILLIAM L. TOLIVER
NO. 28603
Exp. 12/31/2023
MECHANICAL
STATE OF CALIFORNIA

DO NOT SCALE DRAWINGS.
ANY DISCREPANCIES TO BE REVIEWED WITH THE ARCHITECT.

SAN DIEGO FAMILY DERMATOLOGY
222 W. MADISON AVE.
EL CAJON, CA 92020

REVISION SCHEDULE

NO	DATE	ISSUE
1	7/24/2023	1ST CITY REVISION

Project No:	23011
Project Start Date:	Issue Date
Drawn:	C. Moya
Checked:	W. Toliver
Revision:	
Sheet Name:	PLUMBING FIXTURE SCHEDULE
Scale:	NONE
Sheet No:	P-100

7/26/2023

KEY NOTES

1. EXISTING 4" WASTE TO SEWER MAIN AT STREET TO REMAIN.
2. EXISTING NATURAL GAS SERVICE & 1-1/4" CW FROM EXISTING 3/4" WATER METER TO REMAIN.
3. EXISTING GAS METER & REGULATOR TO REMAIN. CLOSE VALVE IN RISER SERVING METER.
4. CAP EXISTING 1-1/2" GAS LINE ABOVE CEILING.
5. CONNECT 1-1/4" x 1-1/4" x 1" TEE TO EXIST. 1-1/4" CW ABOVE CEILING.
6. CONNECT 2" WASTE TO EXISTING 4" WASTE BELOW FLOOR. VERIFY EXACT SIZE, LOCATION & ELEVATION OF EXISTING.
7. DROP 1/2" TW & CW IN WALL TO LAVATORY.
8. DROP 1/2" CW IN WALL TO WATER CLOSET.
9. RUN 2" VENT UP THRU ROOF. FLASH & SEAL WEATHER-TIGHT.
10. CONNECT 4" WASTE TO EXISTING 4" WASTE BELOW FLOOR. VERIFY EXACT SIZE, LOCATION & ELEVATION OF EXISTING.
11. CONNECT 3/4" CONDENSATE DRAIN TO HEAT PUMP WITH VENTED TRAP PER MANUF. RECOMMENDATIONS. DROP THRU ROOF TO ABOVE CEILING. FLASH & SEAL PENETRATION. SLOPE 1/8" PER FT., MINIMUM.
12. DROP 1/2" TW & CW IN WALL TO SINK.
13. DROP 1/2" CW IN WALL. STUB OUT 1/2" CW TO EACH WATER CLOSET.
14. SET IN DRAIN PAN ON SHELF ABOVE MOP SINK. STRAP TO WALL. SEE DETAIL 1, SHEET P-100.
15. DROP 3/4" HW & CW IN WALL. STUB OUT TO WATER HEATER. SEE DETAIL & HOT WATER PIPING DIAGRAM, SHEET P-100.
16. DROP 3/4" HWR IN WALL TO RECIRC. STATION. SEE WATER PIPING DIAGRAM.
17. DROP 1" CW IN WALL TO MIXING VALVE AT RS-1. RUN 1" TW FROM VALVE UP IN WALL TO ABOVE CEILING. SEE HOT WATER PIPING DIAGRAM, SHT. P-100.
18. MOUNT TO WALL PER MANUF. RECOMMENDATIONS.
19. DROP 3/4" CONDENSATE DRAIN IN WALL. STUB OUT TO TAILPIECE FITTING AT LAV.
20. HEAT PUMP ON ROOF. SEE MECHANICAL ROOF PLAN, SHEET M-100.
21. RUN 3" VENT UP THRU ROOF. FLASH & SEAL WEATHER-TIGHT.

phone 619.825.7516
PO Box 2186
Spring Valley, CA
91979
project number 23011

ENGINEERED SYSTEMS
Consulting Engineers
engsysmail@gmail.com

NDAA group
architects
4990 N Harbor Drive, Ste 201
San Diego, CA 92106
tel: 619-297-8066
web: www.ndaainc.com

REGISTERED PROFESSIONAL ENGINEER
WILLIAM L. TOLIVER
No. 29603
Exp. 12/31/2023
MECHANICAL
STATE OF CALIFORNIA

DO NOT SCALE DRAWINGS.
ANY DISCREPANCIES TO BE REVIEWED WITH THE ARCHITECT.

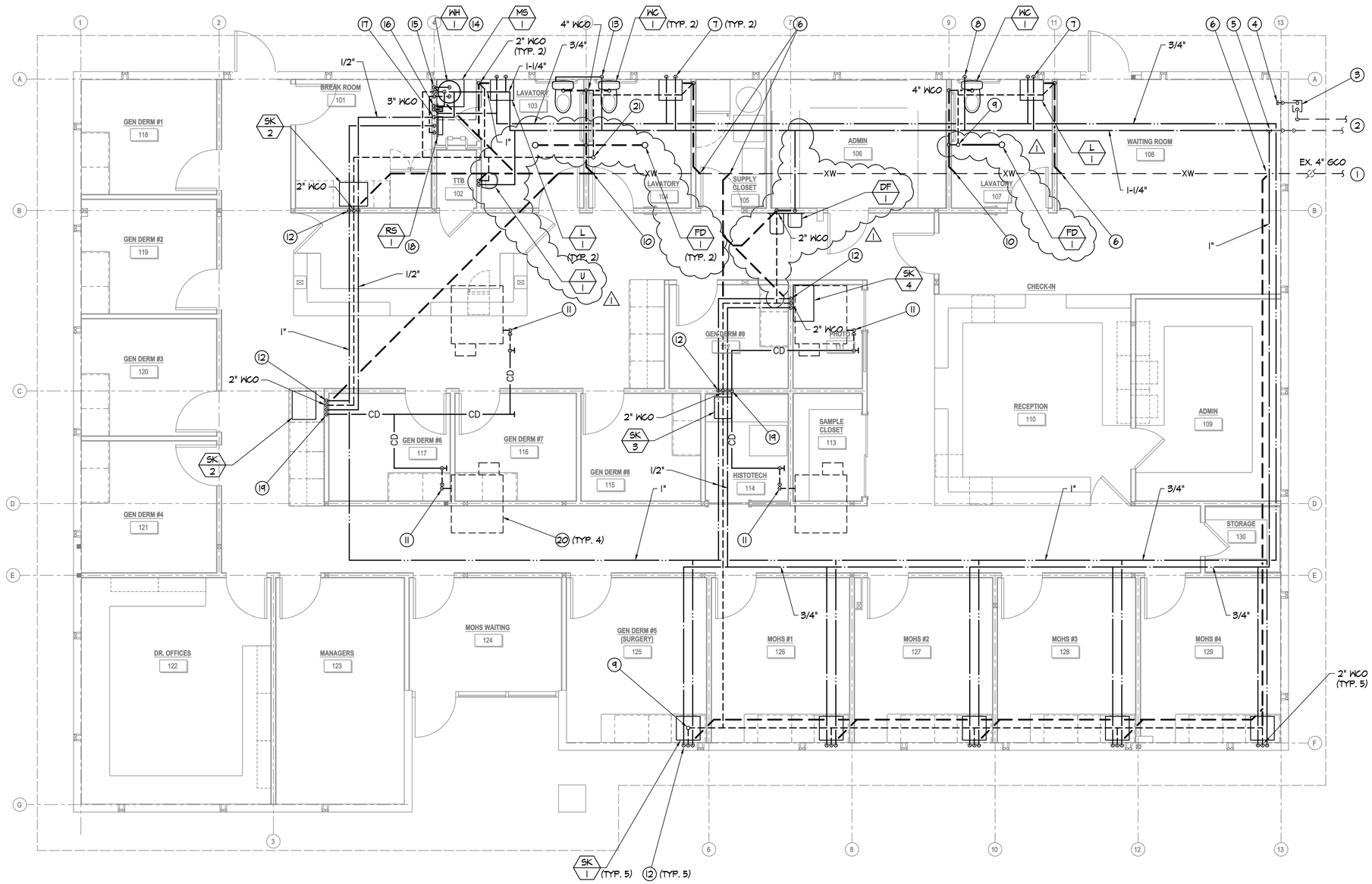

SAN DIEGO FAMILY DERMATOLOGY

222 W. MADISON AVE.
EL CAJON, CA 92020

REVISION SCHEDULE		
NO	DATE	ISSUE
1	7/24/2023	1ST CITY REVISION

Project No:	23011
Project Start Date:	Issue Date
Drawn:	C. Moya
Checked:	W. Toliver
Revision:	
Sheet Name:	

PLUMBING PLAN

Scale:	1/4" = 1'-0"
Sheet No:	

P-101

7/26/2023

phone 619.825.7516
PO Box 2186
Spring Valley, CA
91979
project number 23011
ENGINEERED SYSTEMS
Consulting Engineers
engsysmail@gmail.com

NDAA group
architects
4990 N Harbor Drive, Ste 201
San Diego, CA 92106
tel: 619-297-8066
web: www.ndaainc.com

REGISTERED PROFESSIONAL ENGINEER
WILLIAM L. TOLIVER
No. 29653
Exp. 12/31/2023
MECHANICAL
STATE OF CALIFORNIA

DO NOT SCALE DRAWINGS.
ANY DISCREPANCIES TO BE REVIEWED WITH THE ARCHITECT.

KEY NOTES

1. EXISTING 4" WASTE TO SEWER MAIN AT STREET TO REMAIN.
2. CONNECT 2" WASTE TO EXISTING 4" WASTE BELOW FLOOR. VERIFY EXACT SIZE, LOCATION & ELEVATION OF EXISTING.
3. CONNECT 4" WASTE TO EXISTING 4" WASTE BELOW FLOOR. VERIFY EXACT SIZE, LOCATION & ELEVATION OF EXISTING.

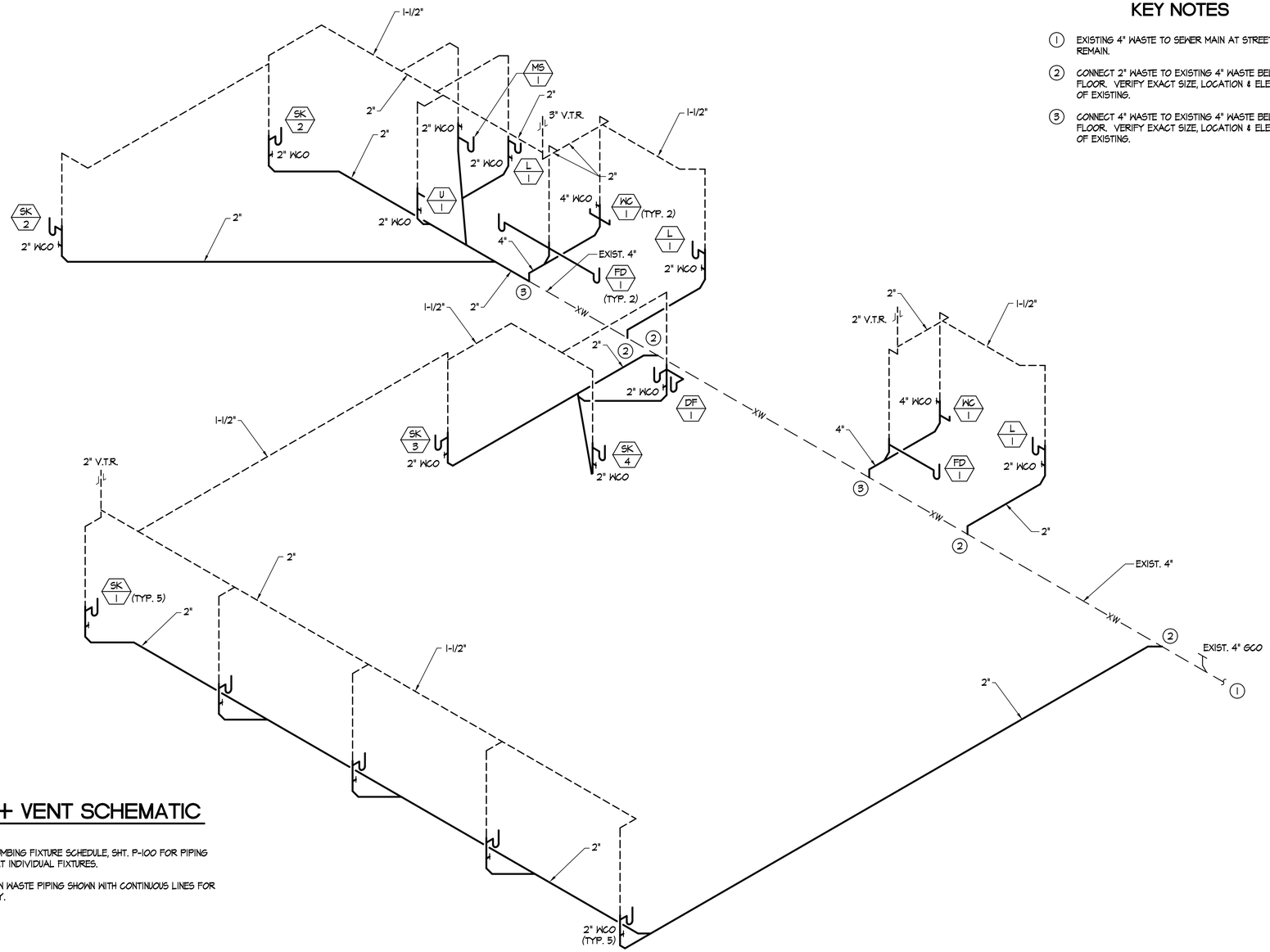

WASTE + VENT SCHEMATIC

NO SCALE

NOTES: 1. SEE PLUMBING FIXTURE SCHEDULE, SHT. P-100 FOR PIPING SIZES AT INDIVIDUAL FIXTURES.

2. ALL NEW WASTE PIPING SHOWN WITH CONTINUOUS LINES FOR CLARITY.

SAN DIEGO FAMILY DERMATOLOGY

222 W. MADISON AVE.
EL CAJON, CA 92020

REVISION SCHEDULE		
NO	DATE	ISSUE
1	7/24/2023	1ST CITY REVISION

Project No:	23011
Project Start Date:	Issue Date
Drawn:	C. Moya
Checked:	W. Toliver
Revision:	
Sheet Name:	WASTE & VENT SCHEMATIC
Scale:	NONE
Sheet No:	P-200

7/26/2023

SECURITY LEGEND

Symbol	Description
A	ALARM CONTACT
CR	CARD READER
KP	KEYPAD
GB	GLASS BREAK
MS	MOTION SENSOR
ES	ELECTRIC DOOR STRIKE
DC	DOOR CONTACT
DR	REMOTE DOOR RELEASE
EL	ELECTRONIC LOCK
VD	VIBRATION DETECTOR
DA	DOOR BREACH ALARM
PB	PANIC BUTTON / DURESS ALARM
REX	REQUEST TO EXIT
EHO	ELECTRONIC HOLD OPEN
EPH	ELECTRONIC PANIC HARDWARE
EML	ELECTRONIC MAGNETIC LOCK
	FIXED POSITION VIDEO CAMERA
PTZ	PAN, TILT, ZOOM VIDEO CAMERA

CONTROL LEGEND

Symbol	Description
XX	D = DIMMING SWITCH K = KEYED SWITCH P = PILOT LIGHT SWITCH R = MOMENTARY CONTACT SWITCH T = TIMER SWITCH 3 = THREE WAY SWITCH
	FLUSH MOUNTED SINGLE POLE STANDARD TOGGLE SWITCH MOUNTED AT +48" AFF TO TOP OF BOX U.O.N. LETTERING INDICATES QUANTITY OF SWITCHES AND DEVICES TO BE CONTROLLED.
	SURFACE MOUNTED SPST SWITCH MOUNTED AT +48" AFF TO TOP OF BOX U.O.N
OC XX	U = ULTRA SONIC OCCUPANCY SENSOR DT = DUAL TECHNOLOGY OCCUPANCY SENSOR
OC	FLUSH INFRARED WALL OCCUPANCY SENSOR SINGLE BUTTON MOUNTED AT +48" AFF TO TOP OF BOX U.O.N
OC ab	FLUSH INFRARED WALL OCCUPANCY SENSOR DUAL BUTTON MOUNTED AT +48" AFF TO TOP OF BOX U.O.N
OC	SURFACE INFRARED WALL OCCUPANCY SENSOR SINGLE BUTTON MOUNTED AT +48" AFF TO TOP OF BOX U.O.N
OC ab	SURFACE INFRARED WALL OCCUPANCY SENSOR DUAL BUTTON MOUNTED AT +48" AFF TO TOP OF BOX U.O.N
OC	CEILING MOUNTED INFRARED OCCUPANCY SENSOR
DL	CEILING MOUNTED DAY LIGHT SENSOR
O	FLUSH MOUNTED OVERRIDE SWITCH STATION MOUNTED AT +48" AFF TO TOP OF BOX U.O.N. BUTTON CONFIGURATION AS NOTED PER FLOOR PLAN
O	SURFACE MOUNTED OVERRIDE SWITCH STATION MOUNTED AT +48" AFF TO TOP OF BOX U.O.N. BUTTON CONFIGURATION AS NOTED PER FLOOR PLAN
PC	PHOTOCELL MOUNTED AND ORIENTATED AS NOTED ON FLOOR PLAN

WIRING LEGEND

Symbol	Description
	BRANCH CIRCUIT RACEWAY TO BE DEMOLISH
	BRANCH CIRCUIT RACEWAY CONCEALED IN WALL OR CEILING
	BRANCH CIRCUIT RACEWAY CONCEALED IN FLOOR OR UNDERGROUND
	RACEWAY EXPOSED
	RACEWAY TURNED UP
	RACEWAY TURNED DOWN
	RACEWAY CAPPED AND STUBBED.PROVIDE PERMANENT GROUND MARKER FOR UNDERGROUND INSTALLATIONS
L1-1	BRANCH CIRCUIT RACEWAY HOME RUN BACK TO ELECTRICAL EQUIPMENT AS NOTED
	BRANCH CIRCUIT RACEWAY WITH 3#12, 1#12N, 1#12GND, 3/4"C, MAXIMUM THREE BRANCH CIRCUITS PER HOME RUN, U.O.N.
#10	BRANCH CIRCUIT RACEWAY WITH 3#10, 1#10N, 1#10GND, 3/4"C, MAXIMUM THREE BRANCH CIRCUITS PER HOME RUN, U.O.N.
	POINT OF CONNECTION TO EQUIPMENT
	CABLE TRAY
WMX	SURFACE MOUNTED WIRE MOLD RACEWAY SYSTEM. X = 1, 2 OR 3 CHANNEL RACEWAY

SIGNAL LEGEND

Symbol	Description
	FLUSH MOUNTED TELECOM OUTLET MOUNTED AT +15" AFF TO BOTTOM OF BOX U.O.N. PROVIDE 1"C. TO ACCESSIBLE CEILING SPACE WITH PULL STRING, U.O.N.
	SURFACE MOUNTED TELECOM OUTLET MOUNTED AT +15" AFF TO BOTTOM OF BOX U.O.N. PROVIDE 1"C. TO ACCESSIBLE CEILING SPACE WITH PULL STRING, U.O.N.
W	FLUSH MOUNTED WALL PHONE OUTLET MOUNTED AT +44" AFF TO TOP OF BOX U.O.N
TV	FLUSH MOUNTED TELEVISION OUTLET MOUNTED AT +15" AFF TO BOTTOM OF BOX U.O.N
	FLUSH FLOOR BOX WITH TELECOM OUTLET
	FIRE RATED POKE THRU WITH TELECOM OUTLET
WAP	WIRELESS ACCESS POINT
	CEILING MOUNTED TELECOM OUTLET
	PUSH BUTTON
B	BUZZER
B	BELL
S	WALL MOUNTED SPEAKER
S	CEILING MOUNTED SPEAKER

POWER LEGEND

Symbol	Description
XX	GFCI = GROUND FAULT CIRCUIT INTERRUPTER IG = ISOLATED GROUND S = SURGE SUPPRESSOR H = HORIZONTAL MOUNTED AC = MOUNT ABOVE COUNTER PER ARCHITECT ELEVATION USB = PROVIDED WITH INTREGRAL USB PORTS RC = RECEPTACLE CONTROLLED PER TITLE 24 2022 SECTION 130.5(d) C = CLOCK TYPE HALF SHADED WIRING INDICATES CONTROLLED RECEPTACLE PER TITLE 24 SECTION 130.5(d)
	FLUSH MOUNTED SINGLE RECEPTACLE MOUNTED AT +15" AFF TO BOTTOM OF BOX U.O.N
	SURFACE MOUNTED SINGLE RECEPTACLE MOUNTED AT +15" AFF TO BOTTOM OF BOX U.O.N
	FLUSH MOUNTED HALF HOT DUPLEX RECEPTACLE MOUNTED AT +15" AFF TO BOTTOM OF BOX U.O.N
	FLUSH MOUNTED DUPLEX RECEPTACLE MOUNTED AT +15" AFF TO BOTTOM OF BOX U.O.N
	FLUSH MOUNTED DUPLEX RECEPTACLE MOUNTING HEIGHT TO BOTTOM OF BOX PER ARCHITECT ELEVATION
	FLUSH MOUNTED QUAD RECEPTACLE MOUNTED AT +15" AFF TO BOTTOM OF BOX U.O.N
	FLUSH MOUNTED QUAD RECEPTACLE MOUNTING HEIGHT TO BOTTOM OF BOX PER ARCHITECT ELEVATION
	SURFACED MOUNTED DUPLEX RECEPTACLE MOUNTED AT +15" AFF TO BOTTOM OF BOX U.O.N
	SURFACED MOUNTED DUPLEX RECEPTACLE MOUNTED AT COUNTER LEVEL PER ARCHITECT ELEVATION
	SURFACE MOUNTED QUAD RECEPTACLE MOUNTED AT +15" AFF TO BOTTOM OF BOX U.O.N
	SURFACE MOUNTED QUAD RECEPTACLE MOUNTING TO BOTTOM OF BOX PER ARCHITECT ELEVATION
XX-XXX	SURFACE MOUNTED SPECIAL NEMA CONFIGURATION RECEPTACLE MOUNTED AT +15" AFF TO BOTTOM OF BOX U.O.N
XX-XXX	FLUSH MOUNTED SPECIAL NEMA CONFIGURATION RECEPTACLE MOUNTED AT +15" AFF TO BOTTOM OF BOX U.O.N
XX-XXX	CEILING MOUNTED SPECIAL NEMA CONFIGURATION RECEPTACLE
XX-XXX	FLOOR MOUNTED SPECIAL NEMA CONFIGURATION RECEPTACLE
	CEILING MOUNTED DUPLEX RECEPTACLE
	CEILING MOUNTED QUAD RECEPTACLE
	FLUSH FLOOR BOX WITH DUPLEX RECEPTACLE
	FLUSH FLOOR BOX WITH QUAD RECEPTACLE
	FLUSH FLOOR BOX WITH COMBINATION DUPLEX RECEPTACLE AND DATA OUTLET
	FLUSH FLOOR BOX WITH COMBINATION QUAD RECEPTACLE AND DATA OUTLET
	FIRE RATED POKE THRU WITH DUPLEX RECEPTACLE
	FIRE RATED POKE THRU WITH QUAD RECEPTACLE
	FIRE RATED POKE THRU WITH DUPLEX RECEPTACLE AND DATA OUTLET
	FIRE RATED POKE THRU WITH QUAD RECEPTACLE AND DATA OUTLET
RC	RECEPTACLE POWER PACK MOUNTED IN ACCESSIBLE CEILING SPACE FOR AUTOMATIC CONTROL OF RECEPTACLE DEVICE
J	FLUSH MOUNTED JUNCTION BOX MOUNTED AT +15" AFF TO BOTTOM OF BOX U.O.N
J	SURFACE MOUNTED JUNCTION BOX MOUNTED AT +15" AFF TO BOTTOM OF BOX U.O.N
J	FLUSH FLOOR MOUNTED JUNCTION BOX
J	CEILING MOUNTED JUNCTION BOX

EQUIPMENT LEGEND

Symbol	Description
F1 / HL1-13 / (R1)	LIGHT FIXTURE DESIGNATION LIGHTING BRANCH CIRCUIT RELAY DESIGNATION IN LIGHTING CONTROL PANEL
AHU 1	MECHANICAL EQUIPMENT TAG
$^M	MOTOR RATED SWITCH
$^SFD	SMOKE FIRE DAMPER
	MOTOR
	HEAVY DUTY NON-FUSED DISCONNECT
F	HEAVY DUTY FUSED DISCONNECT
	MOTOR STARTER, HOA, AUX CONTACTS, CPT, PILOT LIGHTS
	COMBINATION MOTOR STARTER, HOA, AUX CONTACTS, CPT, PILOT LIGHTS, WITH FUSED DISCONNECT SWITCH
VFD	VARIABLE FREQUENCY DRIVE. CONFIRM INTEGRAL DISCONNECTING MEANS WITH MECHANICAL
	FLUSH MOUNTED PANEL BOARD OR ELECTRICAL CABINET
	SURFACE MOUNTED PANEL BOARD OR ELECTRICAL CABINET
	DISTRIBUTION SWITCHBOARD OR PANEL BOARD
T	TRANSFORMER
EPO	EMERGENCY POWER OFF BUTTON

SINGLE LINE LEGEND

Symbol	Description
100AF / 100AT / 3 / LSIG	DRAWOUT CIRCUIT BREAKER AMP FRAME AMP TRIP POLE CONFIGURATION ELECTRONIC TRIP FUNCTIONS
100AF / 100AT / 3 / LSIG	CIRCUIT BREAKER AMP FRAME AMP TRIP POLE CONFIGURATION ELECTRONIC TRIP FUNCTIONS
100AS / 100AF / 3	FUSED SWITCH AMP SWITCH AMP FUSE POLE CONFIGURATION
100AF / 100AT / 3 / LSIG	ENCLOSED CIRCUIT BREAKER AMP FRAME AMP TRIP POLE CONFIGURATION ELECTRONIC TRIP FUNCTIONS
	TRANSFORMER
	FUSE
	GROUNDING ELECTRODE
M	ELECTRONIC METERING UNIT
	CURRENT TRANSFORMER
	POTENTIAL TRANSFORMER
	NORMALLY OPEN CONTACT
	NORMALLY CLOSED CONTACT
C	COIL
ST	SHUNT TRIP
SS	SOLID STATE
TVSS	TRANSIENT VOLTAGE SURGE SUPPRESSION
XXXX	FEEDER TAG
	AUTOMATIC TRANSFER SWITCH
	PACKAGE ENGINE GENERATOR
PANEL HL1	PANEL BOARD
	STRINGER INVERTER
	PHOTOVOLTAIC PANEL (PV PANEL)

ABBREVIATIONS AND DESCRIPTIONS

Abbr.	Description	Abbr.	Description
A / AMP	AMPERE	KW	KILOWATT
AC	ALTERNATING CURRENT	KWH	KILOWATT HOUR
A/C	AIR CONDITIONS	LBS	POUNDS
ABV	ABOVE	LF	LINEAR FEET
ADA	AMERICAN WITH DISABILITIES ACT	LTG / LTS	LIGHTING
AF	AMPERE FRAME, AMPERE FUSE	LV	LOW VOLTAGE
AFF / A.F.F.	ABOVE FINISH FLOOR	M	METER
AFG, A.F.G.	ABOVE FINISH GRADE	MAX	MAXIMUM
AIC / A.I.C.	AMPERE INTERRUPTING CAPACITY	MCA	MINIMUM CIRCUIT AMPERES
AL	ALUMINUM	MCB	MAIN CIRCUIT BREAKER
AS	AMPERE SWITCH	MCC	MOTOR CONTROL CENTER
AT	AMPERE TRIP	MDF	MAIN DISTRIBUTION FRAME
ATS	AUTOMATIC TRANSFER SWITCH	MECH	MECHANICAL
AVG	AVERAGE	MFR	MANUFACTURER
AWG	AMERICAN WIRE GAUGE	MH	MANHOLE
BKR	BREAKER	MIN	MINIMUM
BLDG	BUILDING	MLO	MAIN LUGS ONLY
BR	BRANCH	MOCP	MAXIMUM OVERCURRENT CIRCUIT PROTECTION
C	CONDUIT	MTD	MOUNTED
CATV	CABLE TELEVISION	MTG	MOUNTING
CCTV	CLOSED CIRCUIT TELEVISION	MV	MERCURY VAPOR
CB	CIRCUIT BREAKER	N / NEUT	NEUTRAL
CBC	CALIFORNIA BUILDING CODE	NC	NORMALLY CLOSED
CEC	CALIFORNIA ELECTRIC CODE	NEC	NATIONAL ELECTRICAL CODE
CFC	CALIFORNIA FIRE CODE	NEMA	NATIONAL ELECTRICAL MFR ASSOCIATION
CIRC / CKT	CIRCUIT	NF	NON-FUSED
CL	CENTER LINE	NFPA	NATIONAL FIRE PROTECTION ASSOCIATION
CLG	CEILING	NIC	NOT IN CONTRACT
CO / C.O.	CONDUIT ONLY	NL	NIGHT LIGHT
CONN	CONNECTED	NO	NORMALLY OPEN
COMM	COMMUNICATIONS	NO. / #	NUMBER
CPT	CONTROL POWER TRANSFORMER	NTS	NOT TO SCALE
CSFM	CALIFORNIA STATE FIRE MARSHALL	OC	ON CENTER
CT	CONTROL TRANSFORMER	OFCI	OWNER FURNISH, CONTRACTOR INSTALLED
CTR	CENTER	P	POLE
CU	COPPER	PA	PUBLIC ADDRESS
(D)	DEMOLISH	PB	PULL BOX
DC	DIRECT CURRENT	PC	PHOTOCELL
DET	DETAIL	PDU	POWER DISTRIBUTION UNIT
DIA	DIAMETER	PF	POWER FACTOR
DIM	DIMENSION	PH / ø	PHASE
DISC	DISCONNECT	PNL	PANEL
DIST	DISTRIBUTION	PRIMARY	OVER 600 VOLTS
DP	DISTRIBUTION PANEL	PROVIDE	FURNISH, INSTALL AND/OR CONNECT
DWG	DRAWING	PT	POTENTIAL TRANSFORMER
(E)	EXISTING	PVC	POLYVINYL CHLORIDE
EA	EACH	PWR	POWER
EC	ELECTRICAL CONTRACTOR	QTY	QUANTITY
ED	EXTRA-DUTY	REC	RECESSED
EF	EXHAUST FAN	RECEPT	RECEPTACLE
EG	EQUIPMENT GROUND	REQD	REQUIRED
ELEC	ELECTRICAL	REQT(S)	REQUIREMENT(S)
EM	EMERGENCY	REFRIG	REFRIGERATOR
EMS	EMERGENCY MANAGEMENT CONTROL SYSTEM	RGS	RIGID GALVANIZED STEEL CONDUIT
EMT	ELECTRICAL METALLIC TUBING	RM	ROOM
ENT	ELECTRICAL NON-METALLIC TUBING	RMS	ROOT MEAN SQUARE
EOL	END OF LINE RESISTOR	SCC	SHORT CIRCUIT CURRENT
EP	EXPLOSION PROOF	SECONDARY	600 VOLTS AND LESS
EPO / E.P.O	EMERGENCY POWER OFF	SFD	SMOKE FIRE DAMPER
EQP	EQUIPMENT	SHT	SHEET
EXO	DISCONNECT SWITCH	SPEC	SPECIFICATIONS
FA	FIRE ALARM	SQ	SQUARE
FACP	FIRE ALARM CONTROL PANEL	STC	SIGNAL TERMINAL CABINET
FATC	FIRE ALARM TERMINAL CABINET	SW	SWITCH
FIN	FINISH	SWBD	SWITCHBOARD
FL	FLOOR	SWGR	METAL CLAD SWITCHGEAR
FLA	FULL LOAD AMPS	TC	TIMECLOCK
FT / '	FEET	TEL	TELEPHONE
G / GND	GROUND	TEL/DAT	TELEPHONE AND DATA
GALV	GALVANIZED	TEMP	TEMPERATURE OR TEMPORARY
GC	GENERAL CONTRACTOR	TV	TELEVISION
GFCI	GROUND FAULT CIRCUIT INTERRUPTER	TVSS	TRANSIENT VOLTAGE SURGE SUPPRESSION
GFP	GROUND FAULT PROTECTION	TYP	TYPICAL
GEC	GROUNDING ELECTRODE CONDUCTOR	UGPS	UNDERGROUND PULL SECTION
H / HGT	HEIGHT	UL	UNDERWRITERS LABORATORIES
HACR	HEATING AIR CONDITIONING REFRIGERATION	UON / U.O.N.	UNLESS OTHERWISE NOTED
HID	HIGH INTENSITY DISCHARGE	UPS	UNINTERRUPTIBLE POWER SUPPLY
HOA	HAND OFF AUTO	V	VOLTAGE
HP	HORSEPOWER	VA	VOLT AMPERES
HR	HOUR OR HOME RUN	VAV	VARIABLE AIR VOLUME
HVAC	HEATING, VENTILATING AND AIR CONDITIONING	VD	VOLTAGE DROP
HZ	HERTZ	VFD	VARIABLE FREQUENCY DRIVE
IC	INTERCOM	W	WATTAGE OR WIRE
IDF	INTERMEDIATE DISTRIBUTION FRAME	WAP	WIRELESS ACCESS POINT
IG	ISOLATED GROUND	WH	WATER HEATER
IMC	INTERMEDIATE METAL CONDUIT	WP	WEATHERPROOF
IN / "	INCHES	WR	WEATHER RESISTANT
IP	INTERNET PROTOCOL	WT	WEIGHT
JB / JBOX	JUNCTION BOX	X / (X)	EXISTING
KAIC	KILOAMPERE INTERRUPTING CAPACITY	XFMR	TRANSFORMER
KCMIL / MCM	THOUSAND CIRCULAR MILS	XL / (XL)	EXISTING TO BE RELOCATED
KS	KNEE SPACE	XN / (XN)	EXISTING NEW LOCATION
KV	KILOVOLT	XR / (XR)	EXISTING TO BE REMOVED
KVA	KILOVOLT AMPERE	%Z	PERCENTAGE IMPEDANCE

Sheet List Table

Sheet Number	Sheet Title
E001	COVER SHEET
E002	LIGHTING FIXTURE SCHEDULE
E003	TITLE 24 FORMS
E101	DEMOLITION PLAN
E201	LIGHTING PLAN
E301	POWER PLAN
E302	ROOF PLAN
E501	EMERGENCY EGRESS PLAN
E701	LIGHTING CONTROL DETAILS
E801	SINGLE LINE DIAGRAM

GENERAL PROJECT NOTES

1. CONTRACTOR TO OBTAIN PERMISSION FOR ACCESS TO THE SITE FROM THE OWNER OR DESIGNATED OWNER REPRESENTATIVE TO VISIT THE SITE INCLUDING ALL AREAS OF WORK PRIOR TO BID. CONTRACTOR TO BE FAMILIARIZED WITH EXISTING CONDITIONS, VERIFY SAID CONDITIONS, DIMENSIONS, AND ROUTINGS PRIOR TO START OF CONSTRUCTION. REPORT ANY DISCREPANCIES TO OWNER / ARCHITECT / ENGINEER WITHIN 48 HOURS OF DISCREPANCIES FOUND.
2. CONTRACTOR SHALL CONFIRM ACCURACY OF PANEL BOARD INFORMATION PRIOR TO START OF WORK. REPORT ANY DISCREPANCIES TO OWNER / ARCHITECT / ENGINEER WITHIN 48 HOURS OF DISCREPANCIES FOUND.
3. ALL WORK SHOWN IS NEW UNLESS OTHERWISE NOTED.
4. ALL AREAS OUTSIDE THE SCOPE OF WORK SHALL BE PROTECTED IN PLACE AND REMAIN INTACT, U.O.N.
5. CONTRACTOR TO COORDINATE WITH OWNER ANY SHUTDOWN OF ELECTRICAL EQUIPMENT WITH 7 DAYS NOTIFICATION. CONTRACTOR TO INCLUDE OFF HOURS IN PRICING FOR THIS WORK.
6. ALL ELECTRICAL MATERIAL AND EQUIPMENT SHALL BE NEW BEARING A UL LISTING OR ACCEPTABLE NRTL LISTING FROM THE LOCAL AREA JURISDICTION.
7. CONTRACTOR SHALL COMPLY WITH THE CURRENT VERSION OF THE NATIONAL ELECTRICAL CODE 2022, STATE, LOCAL CODES, ORDINANCES, AND REGULATIONS.
8. WORK SHALL BE PERFORMED IN A SAFE MANNER AND NOT DISTURB OR AFFECT EXISTING BUILDING UTILITIES, OCCUPANTS, OR FINISHES WITHOUT PRIOR NOTICE AND APPROVAL FROM OWNER.
9. ALL CONDUIT RUN SHALL BE FIELD COORDINATED, LOCATE CONDUITS CLEAR OF OTHER TRADES, DOOR ACCESS, OR OTHER OBSTRUCTIONS. COORDINATE CONDUIT RUNS WITH OTHER TRADES PRIOR TO COMMENCEMENT OF WORK.
10. RUN ALL CONDUITS CONCEALED IN CEILING SPACES, U.O.N. TO BE SURFACE MOUNTED. ALL CONDUIT PATHWAYS MUST MAINTAIN 6 INCHES CLEAR OF SOURCES OF HEAT, SUPPORT CONDUITS FROM STRUCTURE.
11. ALL BRANCH CIRCUITS TO BE PROVIDED WITH SEPARATE GREEN GROUND INSULATED CONDUCTOR.
12. ALL BRANCH CIRCUITS TO BE PROVIDED WITH SEPARATE WHITE NEUTRAL INSULATED CONDUCTOR. SHARED NEUTRAL IS ACCEPTABLE IF COMMON HANDLE TIE CIRCUIT BREAKER ARE UTILIZED TO SIMULTANEOUSLY DISCONNECT ALL UNGROUNDED CONDUCTORS PER NEC 210.4(B).
13. PROVIDE IDENTIFICATION TAGS FOR ALL WIRING, INSTALL TAGS AT END OF RUNS, INTERMEDIATE PULL BOXES, JUNCTION BOXES, CABINETS, ETC.
14. BRANCH CIRCUIT VOLTAGE DROP NOT TO EXCEED 3% FROM PANEL BOARD SOURCE.
15. LABEL ALL CIRCUIT BREAKERS IN ALL ELECTRICAL DISTRIBUTION PANELS AND SWITCHBOARDS. PROVIDE TYPE WRITTEN CIRCUIT DIRECTORY CARDS FOR ANY PANEL BOARD HAVING CIRCUIT MODIFICATIONS.
16. PROVIDE P-TOUCH LABELS ON ALL NEW, LIGHT FIXTURES, ELECTRICAL EQUIPMENT, OUTLETS COVERS, RACKS, PLUG MOLD, AND SWITCHES.
17. ALL CONDUITS PENETRATING ELECTRICAL/MECHANICAL SPACES OF RATED WALLS SHALL BE SEALED AND FIRE STOPPED.
18. ALL ELECTRICAL PENETRATIONS INTO COOLER OR FREEZER UNITS SHALL BE SEALED PER SECTION 300-7 OF THE NEC.
19. NO PIPING, DUCTS OR EQUIPMENT FOREIGN TO ELECTRICAL EQUIPMENT SHALL BE PERMITTED TO BE LOCATED WITHIN THE DEDICATED SPACE ABOVE THE ELECTRICAL EQUIPMENT PER NEC 110.26(E) (1).
20. THE ENGINEER OF RECORD TAKES NO EXCEPTION TO THE USE OF MC CABLE WHERE ALLOWED BY THE CEC 330 AND PROVIDE MC CABLE IS ACCEPTABLE WITH BUILDING OWNERSHIP.
21. CONTRACTOR SHALL REVIEW THE ARCHITECTURAL PLANS FOR NOTES OR DIRECTIVES THAT CONCERN ELECTRICAL INSTALLATIONS AND DETAILS.
22. CONDUIT/WIRING IS NOT PERMITTED TO BE INSTALLED ON THE ROOF OF A BUILDING AND WIRING ON THE EXTERIOR OF A BUILDING REQUIRES APPROVAL BY THE BUILDING OFFICIAL.

NOAA group architects
4990 N Harbor Drive, Ste 201
San Diego, CA 92106
tel: 619-297-8066
web: www.noaainc.com

REGISTERED PROFESSIONAL ENGINEER · E19124 · Exp. 06/30/24 · ELECTRICAL · STATE OF CALIFORNIA

RBCE JOB #2023-0048

DO NOT SCALE DRAWINGS.
ANY DISCREPANCIES TO BE REVIEWED WITH THE ARCHITECT.

SAN DIEGO FAMILY DERMATOLOGY
222 W. MADISON AVE.
EL CAJON, CA 92020

REVISION SCHEDULE

NO	DATE	ISSUE
1	7/24/2023	1ST CITY REVISION

Project No:	2023-0048
Project Start Date:	2023-04-11
Drawn:	TW/
Checked:	RB
Revision:	--
Sheet Name:	COVER SHEET
Scale:	AS SHOWN
Sheet No:	E001

COVER SHEET

RB Consulting Engineers, Inc.
DEVELOP.DESIGN.DELIVER
1044 PIONEER WAY, SUITE E
EL CAJON, CA 92020
TEL: 619.334.6020

E001

7/27/2023 3:25 PM

LUMINAIRE SCHEDULE

CALLOUT	SYMBOL	DESCRIPTION	LAMP	FIXTURE LUMENS	EGRESS LUMENS	COLOR TEMP	CRI	MANUFACTURER	MODEL	MOUNTING	NOTES	INPUT WATTS	VOLTS	DIMMING	QTY.
F1		2X4 EDGE-LIT FLAT PANEL, JOB RAM FILM, ISO CLASS 5-9, EXTRUDED ALUMINUM FRAME, MATTE WHITE FINISH	(1) 39W	4500	0	4000K	80	COLUMBIA	SRP24 MOD SERIES	RECESSED		39	120V 1P 2W	0-10V	52
F2		2X2 EDGE-LIT FLAT PANEL, JOB RAM FILM, ISO CLASS 5-9, EXTRUDED ALUMINUM FRAME, MATTE WHITE FINISH.	(1) 23W	2800	0	4000K	80	COLUMBIA	SRP22 MOD SERIES	RECESSED		23	120V 1P 2W	0-10V	23
F2E		2X2 EDGE-LIT FLAT PANEL, JOB RAM FILM, ISO CLASS 5-9, EXTRUDED ALUMINUM FRAME, MATTE WHITE FINISH.	(1) 23W	2800	1400	4000K	80	COLUMBIA	SRP22 MOD SERIES	RECESSED		23	120V 1P 2W	0-10V	9
F3		4" SHALLOW PLENUM ROUND DOWNLIGHT, WET LOCATION LENS.	(1) 12W	1000	0	3500K	80	PATHWAY LIGHTING	4SFK SERIES	RECESSED		12	120V 1P 2W	0-10V	2
X1		EDGE LIT LED EXIT SIGN, CLEAR ACRYLIC PANELS, FIELD ADJUSTABLE CHEVRON ARROWS, LETTERING AND CHEVRONS TO BE COLOR GREEN ON MIRROR OPTION, CONNECTED TO 90 MINUTE EMERGENCY INVERTER.	(1) 3.1W LED	0	0			PRECISE SERIES	LITHONIA	CEILING		3.1	120V 1P 2W	LED DRIVER	8
1 X2		WET LOCATION EMEGRENCY WALLS CONCE, WITH 90 MINUTE BATTERY PACK	(1) 2.8W LED	0	405	80 CRI	6350K	PG SERIES: PG-W	DUAL-LITE	WALL		2.8	120V 1P 2W	LED DRIVER	1

1. QUANTITY COLUMN SHOWN IS FOR REFERENCE ONLY. CONTRACTOR TO CONFIRM COUNTS PRIOR TO ORDER.
2. CONTRACTOR TO VERIFY DIMMING COMPATIBILTY OF ALL FIXTURE TYPES WITH OWNER SELECTED DIMMING CONTROLS.
3. CONTRACTOR TO PROVIDE ALL REMOTE POWER SUPPLIES AND MOUNTING ACCESSORIES REQUIRED TO INSTALL A COMPLETE AND OPERATIONAL SYSTEM.
4. VERIFY ALL MOUNTING HEIGHTS AND FIXTURE LENGTHS WITH ARCHITECTURAL ELEVATIONS PRIOR TO ORDERING.
5. ALL LINEAR FIXTURES TO BE SEAMLESS WITH FULLY ILLUMINATED SECTIONS AND MATCH PATTTERN PER ARCHITECTURAL PLANS.
6. BATTERY PACKS IN EMERGENCY LIGHT FIXTURES TO BE TITLE 20 COMPLIANT.

1 LIGHTING FIXTURE SCHEDULE
SCALE: NONE

NOAA group architects
4990 N Harbor Drive, Ste 201
San Diego, CA 92106

tel: 619-297-8066
web: www.noaainc.com

REGISTERED PROFESSIONAL ENGINEER
BRIAN W. BERTALOTTO
E19124
Exp. 06/30/24
ELECTRICAL
STATE OF CALIFORNIA

RBCE JOB #2023-0048

DO NOT SCALE DRAWINGS.
ANY DISCREPANCIES TO BE REVIEWED WITH THE ARCHITECT.

SAN DIEGO FAMILY DERMATOLOGY

222 W. MADISON AVE.
EL CAJON, CA 92020

REVISION SCHEDULE

NO	DATE	ISSUE
1	7/24/2023	1ST CITY REVISION

Project No: 2023-0048
Project Start Date: 2023-04-11
Drawn: TW/
Checked: RB
Revision: --
Sheet Name:

LIGHTING FIXTURE SCHEDULE

Scale: AS SHOWN
Sheet No:

E002

RB Consulting Engineers, Inc.
DEVELOP.DESIGN.DELIVER
1044 PIONEER WAY, SUITE E
EL CAJON, CA 92020
TEL: 619.334.6020

7/27/2023 3:25 PM

STATE OF CALIFORNIA
Indoor Lighting
CALIFORNIA ENERGY COMMISSION

CERTIFICATE OF COMPLIANCE			NRCC-LTI-E
Project Name:	SAN DEIGO FAMILY DERMATOLOGY	Report Page:	(Page 1 of 8)
Project Address:	222 WEST MADISON AVENUE	Date Prepared:	5/16/2023

This document is used to demonstrate compliance with requirements in 110.9, 110.12(c), 130.0, 130.1, 140.6 and 141.0(b)2 for indoor lighting scopes using the prescriptive path for nonresidential and hotel/motel occupancies. It is also used to document compliance with requirements in 160.5, 170.2(e) and 180.2(b)4 for indoor lighting scopes using the prescriptive path for multifamily occupancies. Multifamily includes dormitory and senior living facilities.

A. GENERAL INFORMATION

01	Project Location (city)	EL CAJON	04 Total Conditioned Floor Area (ft²)	4,104
02	Climate Zone	10	05 Total Unconditioned Floor Area (ft²)	0
03	Occupancy Types Within Project (select all that apply):		06 # of Stories (Habitable Above Grade)	1

● Healthcare Facility ● Office ● Support Areas ● Warehouse ● All Other Occupancies

B. PROJECT SCOPE

This table includes any lighting systems that are within the scope of the permit application and are demonstrating compliance using the prescriptive path outlined in 140.6 / 170.2(e) or 141.0(b)2 / 180.2(b)4 for alterations.

Scope of Work	Conditioned Spaces		Unconditioned Spaces	
01	02	03	04	05
My Project Consists of (check all that apply):	Calculation Method	Area (ft²)	Calculation Method	Area (ft²)
☐ New Lighting System				
☐ New Lighting System - Parking Garage				
☒ Altered Lighting System	Area Category Method	4104	Area Category Method	0
Total Area of Work (ft²)	4104		0	

Registration Number: | Generated Date/Time: | Documentation Software: EnergyPro
CA Building Energy Efficiency Standards - 2022 Nonresidential Compliance | Report Version: 2022.0.000 | Compliance ID: EnergyPro-9567-0523-0364
Schema Version: rev 20220101 | Report Generated: 2023-05-16 08:39:12

STATE OF CALIFORNIA
Indoor Lighting
CALIFORNIA ENERGY COMMISSION

CERTIFICATE OF COMPLIANCE			NRCC-LTI-E
Project Name:	SAN DEIGO FAMILY DERMATOLOGY	Report Page:	(Page 2 of 8)
Project Address:	222 WEST MADISON AVENUE	Date Prepared:	5/16/2023

C. COMPLIANCE RESULTS

If any cell on this table says "DOES NOT COMPLY" or "COMPLIES with Exceptional Conditions" refer to Table D. for guidance.

Lighting in conditioned and unconditioned spaces must not be combined for compliance per 140.6(b)1 / 170.2(e)	Allowed Lighting Power per 140.6(b) / 170.2(e) (Watts)						Adjusted Lighting Power per 140.6(a) / 170.2(e) (Watts)				Compliance Results
	01	02	03	04		05	06	07		08	09
	Complete Building 140.6(c)1	Area Category 140.6(c)2 / 170.2(e)4	Area Category Additional 140.6(c)2G / 170.2(e)4Av (+)	Tailored 140.6(c)3 / 170.2(e)4B (+)	=	**Total Allowed** (Watts)	≥ Total Designed (Watts)	Adjustments PAF Lighting Control Credits 140.6(a)2 / 170.2(e)3B (-)	=	**Total Adjusted** (Watts) *Includes Adjustments	**05 must be >= 08 140.6 / 170.2(e)**
	(See Table I)	(See Table I)	(See Table J)	(See Table K)			(See Table F)	(See Table P)			
Conditioned		3,088.9	0		=	3,089	≥ 2,647	0	=	2647	COMPLIES
Unconditioned					=		≥		=		
Controls Compliance (See Table H for Details)											COMPLIES
Rated Power Reduction Compliance (See Table Q for Details)											

D. EXCEPTIONAL CONDITIONS

This table is auto-filled with uneditable comments because of selections made or data entered in tables throughout the form.

E. ADDITIONAL REMARKS

This table includes remarks made by the permit applicant to the Authority Having Jurisdiction.

Registration Number: | Generated Date/Time: | Documentation Software: EnergyPro
CA Building Energy Efficiency Standards - 2022 Nonresidential Compliance | Report Version: 2022.0.000 | Compliance ID: EnergyPro-9567-0523-0364
Schema Version: rev 20220101 | Report Generated: 2023-05-16 08:39:12

STATE OF CALIFORNIA
Indoor Lighting
CALIFORNIA ENERGY COMMISSION

CERTIFICATE OF COMPLIANCE			NRCC-LTI-E
Project Name:	SAN DEIGO FAMILY DERMATOLOGY	Report Page:	(Page 3 of 8)
Project Address:	222 WEST MADISON AVENUE	Date Prepared:	5/16/2023

F. INDOOR LIGHTING FIXTURE SCHEDULE

This table includes all planned permanent and portable lighting other than dwelling unit/ hotel/ motel room lighting. Multifamily dwelling unit and hotel/motel room lighting is documented in Table T. If using Table T to document lighting in multifamily common use areas providing shared provisions for living, eating, cooking or sanitation, those luminaires are not included here.

Designed Wattage: Conditioned Spaces

01	02	03	04	05	06	07	08	09	10	
Name or Item Tag	Complete Luminaire Description	Modular (Track) Fixture	Small Aperture & Color Change[1]	Watts per luminaire[2]	How is Wattage determined	Total Number of Luminaires	Excluded per 140.6(a)3 / 170.2(e)2C	Design Watts	Field Inspector Pass	Fail
F1	F1 - 39W LED	No	NA	39	Mfr. Spec	49	No	1,911	☐	☐
F2	F2 - 23W LED	No	NA	23	Mfr. Spec	23	No	529	☐	☐
F2E	F2E - 23W LED	No	NA	23	Mfr. Spec	9	No	207	☐	☐
					Total Designed Watts: CONDITIONED SPACES			2,647		

[1]FOOTNOTE: Design Watts for small aperture and color changing luminaires which qualify per 140.6(a)4B / 170.2(e)2D is adjusted to be 75%/80% of their rated wattage. Table F automatically makes this adjustment, the permit applicant should enter full rated wattage in column 05.

[2]Authority Having Jurisdiction may ask for Luminaire cut sheets to confirm wattage used for compliance per 130.0(c) / 160.5(b). Wattage used must be the maximum rated for the luminaire, not the lamp.

G. MODULAR LIGHTING SYSTEMS

This section does not apply to this project.

H. INDOOR LIGHTING CONTROLS (Not including PAFs)

This table includes lighting controls for conditioned and unconditioned spaces.

Building Level Controls

01	02	03	
		Field Inspector	
Mandatory Demand Response 110.12(c)	Shut-off controls 130.1(c) / 160.5(b)4C	Pass	Fail
Required >= 4,000W subject to multilevel	Whole Building EMCS	☐	☐

Registration Number: | Generated Date/Time: | Documentation Software: EnergyPro
CA Building Energy Efficiency Standards - 2022 Nonresidential Compliance | Report Version: 2022.0.000 | Compliance ID: EnergyPro-9567-0523-0364
Schema Version: rev 20220101 | Report Generated: 2023-05-16 08:39:12

STATE OF CALIFORNIA
Indoor Lighting
CALIFORNIA ENERGY COMMISSION

CERTIFICATE OF COMPLIANCE			NRCC-LTI-E
Project Name:	SAN DEIGO FAMILY DERMATOLOGY	Report Page:	(Page 4 of 8)
Project Address:	222 WEST MADISON AVENUE	Date Prepared:	5/16/2023

H. INDOOR LIGHTING CONTROLS (Not including PAFs)

Area Level Controls

04	05	06	07	08	09	10	11	12	
Area Description	Complete Building or Area Category Primary Function Area	Manual Area Controls 130.1(a) / 160.5(b)4A	Multi-Level Controls 130.1(b) / 160.5(b)4B	Shut-Off Controls 130.1(c) // 160.5(b)4C	Primary/Skylit Daylighting 130.1(d) / 160.5(b)4D	Secondary Daylighting 130.1(d) / 160.5(b)4D	Interlocked Systems 140.6(a)1/ 170.2(e)2A	Field Inspector Pass	Fail
OFFICES	Office (<=250 square feet)	Readily Accessible	Dimmer	See Building Level	NA: Rm < 24sf Glazing	NA: Rm < 24sf Glazing	No	☐	☐
BREAK	Lounge	Readily Accessible	Dimmer	See Building Level	NA: Rm < 24sf Glazing	NA: Rm < 24sf Glazing	No	☐	☐
CORRIDOR	Corridor	Readily Accessible	Dimmer	See Building Level	NA: Rm < 24sf Glazing	NA: Rm < 24sf Glazing	No	☐	☐
MEDICAL EXAM/TREATMENT	Hospital - Exam/Treatment	Readily Accessible	Dimmer	See Building Level	NA: Rm < 24sf Glazing	NA: Rm < 24sf Glazing	No	☐	☐
RESTROOM	Restroom	Readily Accessible	Dimmer	See Building Level	NA: Rm < 24sf Glazing	NA: Rm < 24sf Glazing	No	☐	☐
RECEPTION	Main Entry Lobby	Readily Accessible	Dimmer	See Building Level	NA: Rm < 24sf Glazing	NA: Rm < 24sf Glazing	No	☐	☐
STORAGE	Commercial Industrial Storage Area	Readily Accessible	Dimmer	See Building Level	NA: Rm < 24sf Glazing	NA: Rm < 24sf Glazing	No	☐	☐
					13				
					Plan Sheet Showing Daylit Zones:				

I. LIGHTING POWER ALLOWANCE: COMPLETE BUILDING OR AREA CATEGORY METHODS

Each area complying using the Complete Building or Area Category Methods per 140.6(b) are included in this table. Column 06 indicates if additional lighting power allowances per 140.6(c) or adjustments per 140.6(a) are being used .

Conditioned Spaces

01	02	03	04	05	06

Registration Number: | Generated Date/Time: | Documentation Software: EnergyPro
CA Building Energy Efficiency Standards - 2022 Nonresidential Compliance | Report Version: 2022.0.000 | Compliance ID: EnergyPro-9567-0523-0364
Schema Version: rev 20220101 | Report Generated: 2023-05-16 08:39:12

STATE OF CALIFORNIA
Indoor Lighting
CALIFORNIA ENERGY COMMISSION

CERTIFICATE OF COMPLIANCE			NRCC-LTI-E
Project Name:	SAN DEIGO FAMILY DERMATOLOGY	Report Page:	(Page 5 of 8)
Project Address:	222 WEST MADISON AVENUE	Date Prepared:	5/16/2023

I. LIGHTING POWER ALLOWANCE: COMPLETE BUILDING OR AREA CATEGORY METHODS

Area Description	Complete Building or Area Category Primary Function Area	Allowed Density (W/ft²)	Area (ft²)	Allowed Wattage (Watts)	Additional Allowance / Adjustment Area Category	PAF
OFFICE (<250 SQ FT)	Office (<=250 square feet)	0.65	680	442	No	No
BREAK	Lounge	0.55	99	54.4	No	No
CORRIDOR/OPEN AREA	Corridor	0.4	882	352.8	No	No
MEDICAL EXAM/TREATMENT	Hospital - Exam/Treatment	1.15	1,259	1,447.8	No	No
RESTROOM	Restroom	0.65	269	174.8	No	No
RECEPTION/WAITING	Main Entry Lobby	0.7	837	585.9	No	No
STORAGE	Commercial Industrial Warehouse	0.4	78	31.2	No	No
		TOTALS:	4,104	3,088.9	See Tables J, or P for detail	

J. ADDITIONAL ALLOWANCE: AREA CATEGORY METHOD QUALIFYING LIGHTING SYSTEM

This section does not apply to this project.

K. TAILORED METHOD GENERAL LIGHTING POWER ALLOWANCE

This section does not apply to this project.

L. ADDITIONAL LIGHTING ALLOWANCE: TAILORED WALL DISPLAY

This section does not apply to this project.

M. ADDITIONAL LIGHTING ALLOWANCE: TAILORED FLOOR AND TASK LIGHTING

This section does not apply to this project.

N. ADDITIONAL LIGHTING ALLOWANCE: TAILORED DECORATIVE /SPECIAL EFFECTS

This section does not apply to this project.

Registration Number: | Generated Date/Time: | Documentation Software: EnergyPro
CA Building Energy Efficiency Standards - 2022 Nonresidential Compliance | Report Version: 2022.0.000 | Compliance ID: EnergyPro-9567-0523-0364
Schema Version: rev 20220101 | Report Generated: 2023-05-16 08:39:12

STATE OF CALIFORNIA
Indoor Lighting
CALIFORNIA ENERGY COMMISSION

CERTIFICATE OF COMPLIANCE			NRCC-LTI-E
Project Name:	SAN DEIGO FAMILY DERMATOLOGY	Report Page:	(Page 6 of 8)
Project Address:	222 WEST MADISON AVENUE	Date Prepared:	5/16/2023

O. ADDITIONAL LIGHTING ALLOWANCE: TAILORED VERY VALUABLE MERCHANDISE

This section does not apply to this project.

P. POWER ADJUSTMENT: LIGHTING CONTROL CREDIT (POWER ADJUSTMENT FACTOR (PAF))

This section does not apply to this project.

Q. RATED POWER REDUCTION COMPLIANCE FOR ONE-FOR-ONE ALTERATIONS

This section does not apply to this project.

R. 80% LIGHTING POWER FOR ALL ALTERATIONS - CONTROLS EXCEPTIONS

This section does not apply to this project.

S. DAYLIGHT DESIGN POWER ADJUSTMENT FACTOR (PAF)

This section does not apply to this project.

T. DWELLING UNIT LIGHTING

This section does not apply to this project.

U. DECLARATION OF REQUIRED CERTIFICATES OF INSTALLATION

Form/Title
NRCI-LTI-E - Must be submitted for all buildings

Registration Number: | Generated Date/Time: | Documentation Software: EnergyPro
CA Building Energy Efficiency Standards - 2022 Nonresidential Compliance | Report Version: 2022.0.000 | Compliance ID: EnergyPro-9567-0523-0364
Schema Version: rev 20220101 | Report Generated: 2023-05-16 08:39:12

STATE OF CALIFORNIA
Indoor Lighting
CALIFORNIA ENERGY COMMISSION

CERTIFICATE OF COMPLIANCE			NRCC-LTI-E
Project Name:	SAN DEIGO FAMILY DERMATOLOGY	Report Page:	(Page 7 of 8)
Project Address:	222 WEST MADISON AVENUE	Date Prepared:	5/16/2023

V. DECLARATION OF REQUIRED CERTIFICATES OF ACCEPTANCE

Form/Title	Systems/Spaces To Be Field Verified
NRCA-LTI-02-A - Must be submitted for occupancy sensors and automatic time switch controls.	Whole Building EMCS;
NRCA-LTI-04-A - Must be submitted for demand responsive lighting controls.	Whole Building Demand Response;

Registration Number: | Generated Date/Time: | Documentation Software: EnergyPro
CA Building Energy Efficiency Standards - 2022 Nonresidential Compliance | Report Version: 2022.0.000 | Compliance ID: EnergyPro-9567-0523-0364
Schema Version: rev 20220101 | Report Generated: 2023-05-16 08:39:12

STATE OF CALIFORNIA
Indoor Lighting
CALIFORNIA ENERGY COMMISSION

CERTIFICATE OF COMPLIANCE			NRCC-LTI-E
Project Name:	SAN DEIGO FAMILY DERMATOLOGY	Report Page:	(Page 8 of 8)
Project Address:	222 WEST MADISON AVENUE	Date Prepared:	5/16/2023

DOCUMENTATION AUTHOR'S DECLARATION STATEMENT

I certify that this Certificate of Compliance documentation is accurate and complete.

Documentation Author Name: RYAN BERTALAN	Documentation Author Signature: Ryan Bertalan
Company: RB Consulting Engineers, Inc.	Signature Date: 2023-05-16
Address: 1044 PIONEER WAY, STE. E	CEA/ HERS Certification Identification (if applicable): E19124
City/State/Zip: EL CAJON CA 92020	Phone: 619-334-6020

RESPONSIBLE PERSON'S DECLARATION STATEMENT

I certify the following under penalty of perjury, under the laws of the State of California:

1. The information provided on this Certificate of Compliance is true and correct.
2. I am eligible under Division 3 of the Business and Professions Code to accept responsibility for the building design or system design identified on this Certificate of Compliance (responsible designer)
3. The energy features and performance specifications, materials, components, and manufactured devices for the building design or system design identified on this Certificate of Compliance conform to the requirements of Title 24, Part 1 and Part 6 of the California Code of Regulations.
4. The building design features or system design features identified on this Certificate of Compliance are consistent with the information provided on other applicable compliance documents, worksheets, calculations, plans and specifications submitted to the enforcement agency for approval with this building permit application.
5. I will ensure that a completed signed copy of this Certificate of Compliance shall be made available with the building permit(s) issued for the building, and made available to the enforcement agency for all applicable inspections. I understand that a completed signed copy of this Certificate of Compliance is required to be included with the documentation the builder provides to the building owner at occupancy.

Responsible Designer Name: RYAN BERTALAN	Responsible Designer Signature: Ryan Bertalan
Company: RB CONSULTING ENGINEERS	Date Signed: 2023-05-16
Address: 1044 PIONEER WAY, SUITE E	License: E19124
City/State/Zip: EL CAJON CA 92020	Phone: 619-334-6020

Registration Number: | Generated Date/Time: | Documentation Software: EnergyPro
CA Building Energy Efficiency Standards - 2022 Nonresidential Compliance | Report Version: 2022.0.000 | Compliance ID: EnergyPro-9567-0523-0364
Schema Version: rev 20220101 | Report Generated: 2023-05-16 08:39:12

1 TITLE 24 FORMS
SCALE: NONE

NDAA group architects
4990 N Harbor Drive, Ste 201
San Diego, CA 92106
tel: 619-297-8066
web: www.nooainc.com

REGISTERED PROFESSIONAL ENGINEER RYAN W. BERTALAN E19124 Exp. 06/30/24 ELECTRICAL STATE OF CALIFORNIA

RBCE JOB #2023-0048

DO NOT SCALE DRAWINGS.
ANY DISCREPANCIES TO BE REVIEWED WITH THE ARCHITECT.

SAN DIEGO FAMILY DERMATOLOGY
222 W. MADISON AVE.
EL CAJON, CA 92020

REVISION SCHEDULE		
NO	DATE	ISSUE
1	7/24/2023	1ST CITY REVISION

Project No: 2023-0048
Project Start Date: 2023-04-11
Drawn: TW/
Checked: RB
Revision: --
Sheet Name:

TITLE 24 FORMS

RB Consulting Engineers, Inc.
DEVELOP.DESIGN.DELIVER
1044 PIONEER WAY, SUITE E
EL CAJON, CA 92020
TEL: 619.334.6020

Scale: AS SHOWN
Sheet No:

E003

7/27/2023 3:25 PM

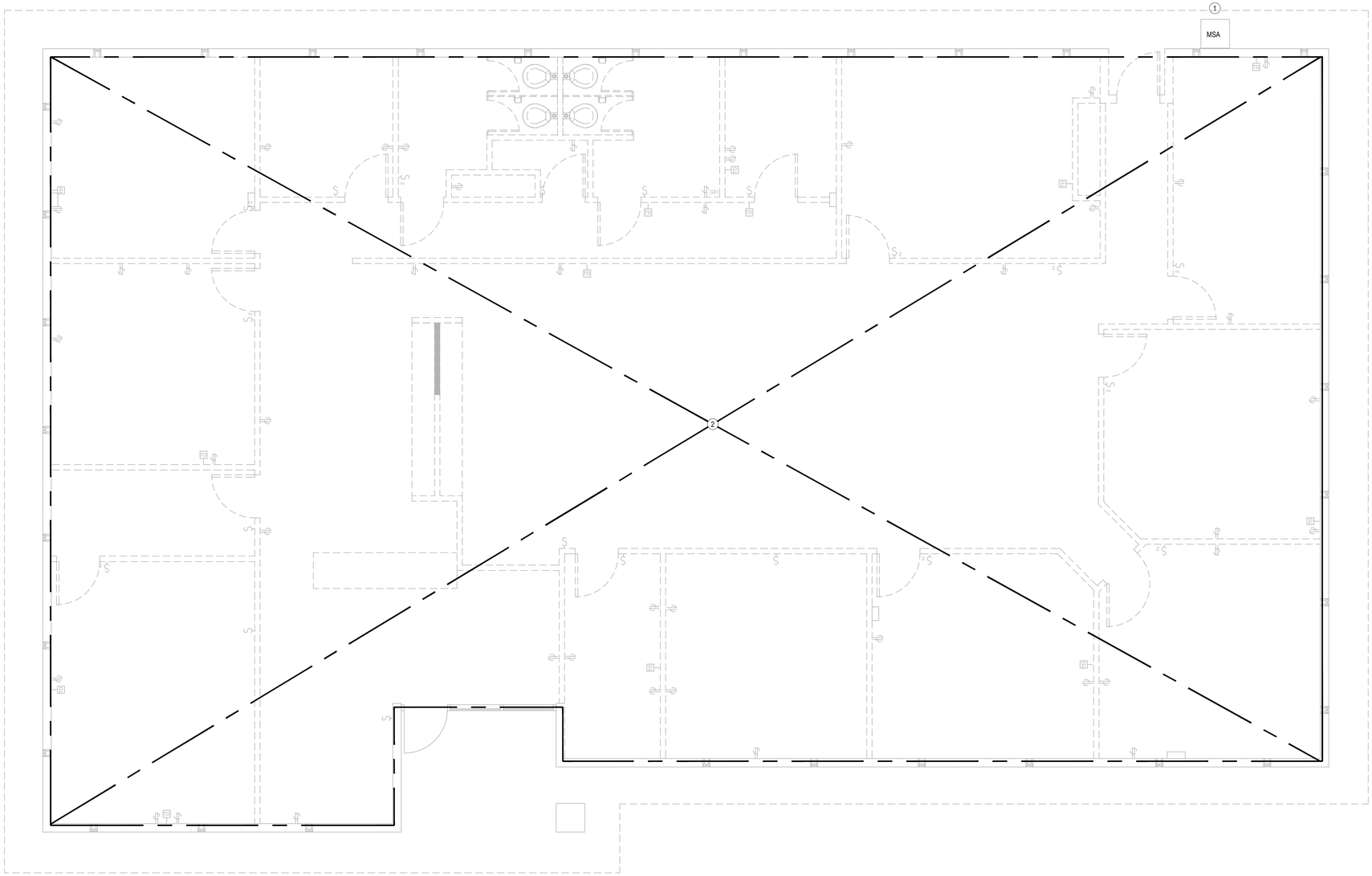

1 DEMOLITION PLAN
SCALE: 1/4" = 1'-0"

NORTH

GENERAL NOTES

1. ALL ELECTRICAL DEVICES ARE EXISTING TO BE DEMOLISHED, U.O.N.
2. DEMOLISH CONDUIT AND CONDUCTORS BACK TO SOURCE PANEL OR NEAREST EXISTING TO REMAIN JUNCTION BOX SERVING OTHER NOT IN SCOPE AREAS.
3. CONTRACTOR TO FIELD VERIFY BRANCH CIRCUITRY PRIOR TO COMMENCEMENT OF WORK.
4. CONTRACTOR TO MAINTAIN CIRCUITRY CONTINUITY TO EXISTING SPACE OUTSIDE THIS SCOPE OF WORK.
5. SEE ARCHITECTURAL SHEETS FOR ADDITIONAL DEMOLITION REQUIREMENTS.
6. ELECTRICAL CONTRACTOR TO MAKE EXISTING ELECTRICAL SYSTEM SAFE FOR DEMO CONTRACTOR. ELECTRICAL CONTRACTOR TO IDENTIFY CONDUIT SYSTEMS THAT ARE TO REMAIN AND CAREFULLY WALK WITH DEMO CONTRACTOR EXPLAINING WHAT NEEDS TO STAY. IT IS THE DEMO CONTRACTOR AND GENERAL CONTRACTORS RESPONSIBILITY TO SET THIS MEETING UP AND MAKE SURE THAT THE COMMUNICATION ON WHAT STAYS IS CRYSTAL CLEAR. ITEMS THAT STAY (FEEDERS TO PANELS ETC) SHOULD BE CLEARLY MARKED ON SITE WITH RED PAINT. ANYTHING MARKED RED SHALL NOT BE DEMOED OR REMOVED.

KEYNOTES

1. APPROXIMATE LOCATION OF EXISTING PANEL.
2. AREA OF DEMOLITION. REMOVE ALL WIRING DEVICES, LIGHT FIXTURES BACK TO SOURCE PANEL BOARD.

NOAA group architects
4990 N Harbor Drive, Ste 201
San Diego, CA 92106
tel: 619-297-8066
web: www.noaainc.com

REGISTERED PROFESSIONAL ENGINEER
BRYAN W. BERTALAN
E19124
Exp. 06/30/24
ELECTRICAL
STATE OF CALIFORNIA

RBCE JOB #2023-0048

DO NOT SCALE DRAWINGS.
ANY DISCREPANCIES TO BE REVIEWED WITH THE ARCHITECT.

SAN DIEGO FAMILY DERMATOLOGY
222 W. MADISON AVE.
EL CAJON, CA 92020

REVISION SCHEDULE

NO	DATE	ISSUE
1	7/24/2023	1ST CITY REVISION

Project No:	2023-0048
Project Start Date:	2023-04-11
Drawn:	TW/
Checked:	RB
Revision:	--

Sheet Name:

DEMOLITION PLAN

RB Consulting Engineers, Inc.
DEVELOP.DESIGN.DELIVER
1044 PIONEER WAY, SUITE E
EL CAJON, CA 92020
TEL: 619.334.6020

Scale: AS SHOWN
Sheet No:

E101

7/27/2023 3:26 PM

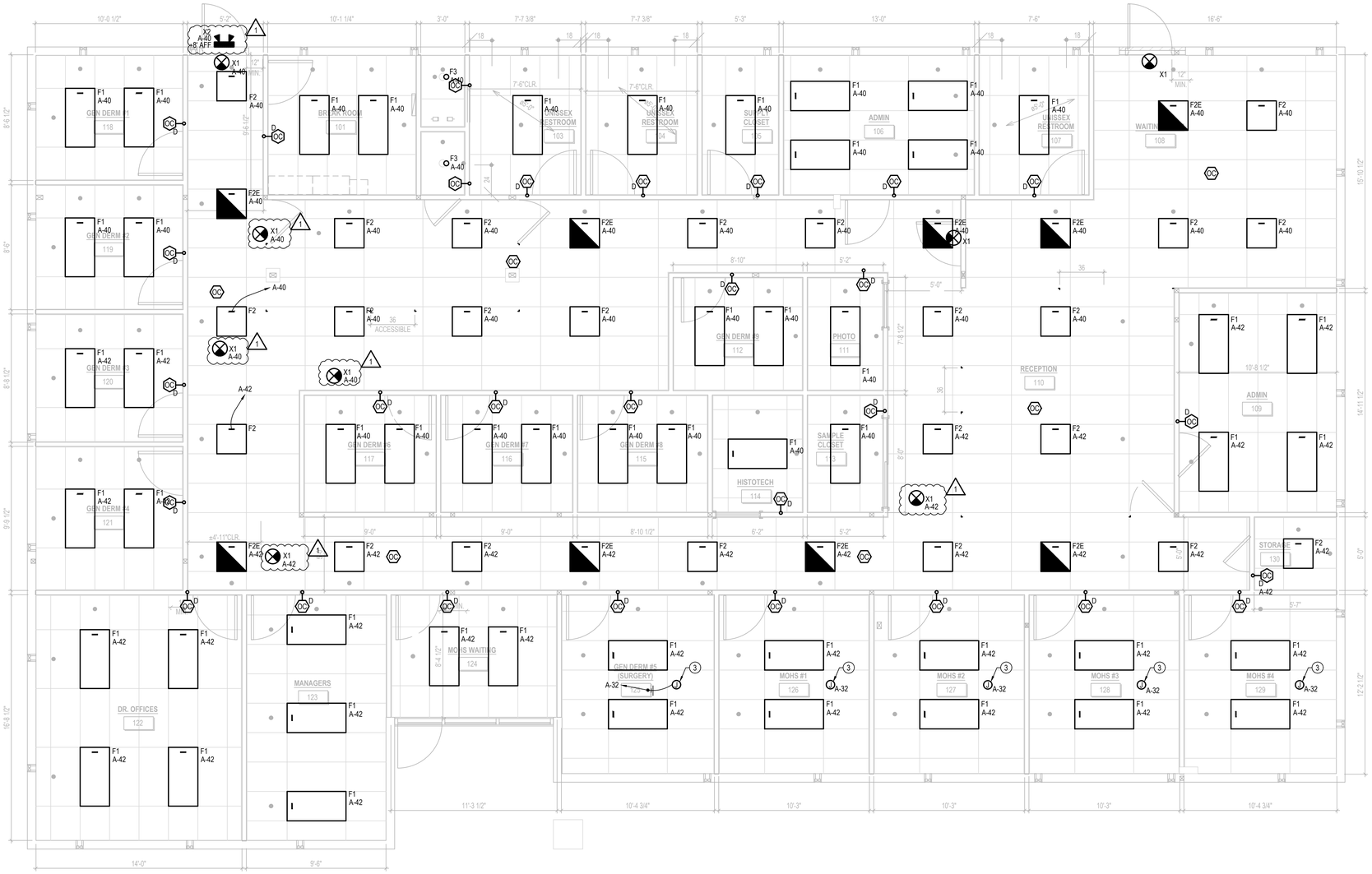

GENERAL NOTES

1. CONTRACTOR TO MAINTAIN CIRCUITRY CONTINUITY TO EXISTING SPACE OUTSIDE THIS SCOPE OF WORK.
2. SEE SHEET E501 FOR EGRESS PHOTOMETRIC CALCULATIONS.
3. SEE SHEET E701 FOR WIRING DIAGRAM OF ROOM CONTROLS FOR LIGHT FIXTURES.
3. SEE SHEET E702 FOR LIGHTING CONTROL DETAILS.
4. SEE ARCHITECTURAL DRAWINGS FOR DETAIL MOUNTING OF LIGHT FIXTURES.
5. SEE ARCHITECTURAL DRAWINGS FOR PENDANT MOUNTING HEIGHT OF LIGHT FIXTURES.
6. SEE ARCHITECTURAL SHEETS FOR ADDITIONAL REQUIREMENTS.
7. SEE ARCHITECTURAL DRAWINGS FOR PENDANT MOUNTING HEIGHT OF LIGHT FIXTURES. AREA CONSISTS OF HIGH CEILINGS.
8. PROVIDE DUAL-TECHNOLOGY CEILING MOUNTED OCCUPANCY SENSOR FOR RESTROOM AREAS.
9. DO NOT SWITCH EXIT SIGNS UNITS OR LIGHT FIXTURES LABELED "NL" (ON CONTINUOUSLY).
10. LIGHTING CONTROL DEVICES MOUNTED IN OPEN CEILING SPACE TO BE MOUNTED BOTTOM OF DEVICE AT SAME ELEVATION OF ADJACENT LIGHT FIXTURES.
11. EMERGENCY CIRCUIT NOT SHOWN ON PLANS FOR CLARITY. CONNECT EMERGENCY FIXTURES SHOWN SHADE AND EXIT SIGNS TO EMERGENCY CIRCUIT LOCATED IN THIS AREA. ROUTE AND EXTEND ALL CONDUIT AND CONDUCTORS AS REQUIRED
12. ALL PERIMETER ROOMS DO NOT EXCEED 119 INPUT WATTS OF LIGHTING IN THE PRIMARY AND SECONDARY SIDE LIT ZONE AND THEREFORE DOES NOT REQUIRE DAYLIGHT HARVESTING PER EXCEPTION 1 TO SECTION 130.1(d)2.
13. EXIT SIGN FIXTURES MOUNTED IN OPEN CEILING SPACE TO BE PENDANT MOUNTED BOTTOM OF DEVICE AT SAME ELEVATION OF ADJACENT LIGHT FIXTURES.
14. COORDINATE PENDANT MOUNTING HEIGHT OF LIGHT FIXTURES IN OPEN CEILING AREAS WITH ARCHITECT PRIOR TO ROUGH IN.
15. EXISTING EXTERIOR LIGHTING TO REMAIN AND BE UNDER EXISTING TIMECLOCK CONTROL.

KEYNOTES

1. APPROXIMATE LOCATION OF NEW PANEL.
2. APPROXIMATE LOCATION OF EXISTING PANEL BOARD.
3. PROVIDE JUNCTION BOX FOR CEILING MOUNTED CONNECTION EXAM LIGHT. COORDINATE EXACT PLACEMENT OF JBOX WITH ARCHITECT PRIOR TOR ROUGH IN.

NOAA group architects
4990 N Harbor Drive, Ste 201
San Diego, CA 92106
tel: 619-297-8066
web: www.noaainc.com

REGISTERED PROFESSIONAL ENGINEER
BRIAN W. BERTALAN
E19124
Exp. 06/30/24
ELECTRICAL
STATE OF CALIFORNIA

RBCE JOB #2023-0048

DO NOT SCALE DRAWINGS.
ANY DISCREPANCIES TO BE REVIEWED WITH THE ARCHITECT.

SAN DIEGO FAMILY DERMATOLOGY

222 W. MADISON AVE.
EL CAJON, CA 92020

REVISION SCHEDULE

NO	DATE	ISSUE
1	7/24/2023	1ST CITY REVISION

Project No:	2023-0048
Project Start Date:	2023-04-11
Drawn:	TW/
Checked:	RB
Revision:	--

Sheet Name:

LIGHTING PLAN

Scale: AS SHOWN

Sheet No:

E201

7/27/2023 3:26 PM

1 LIGHTING PLAN
SCALE: 1/4" = 1'-0"

NORTH

RB Consulting Engineers, Inc.
DEVELOP.DESIGN.DELIVER
1044 PIONEER WAY, SUITE E
EL CAJON, CA 92020
TEL: 619.334.6020

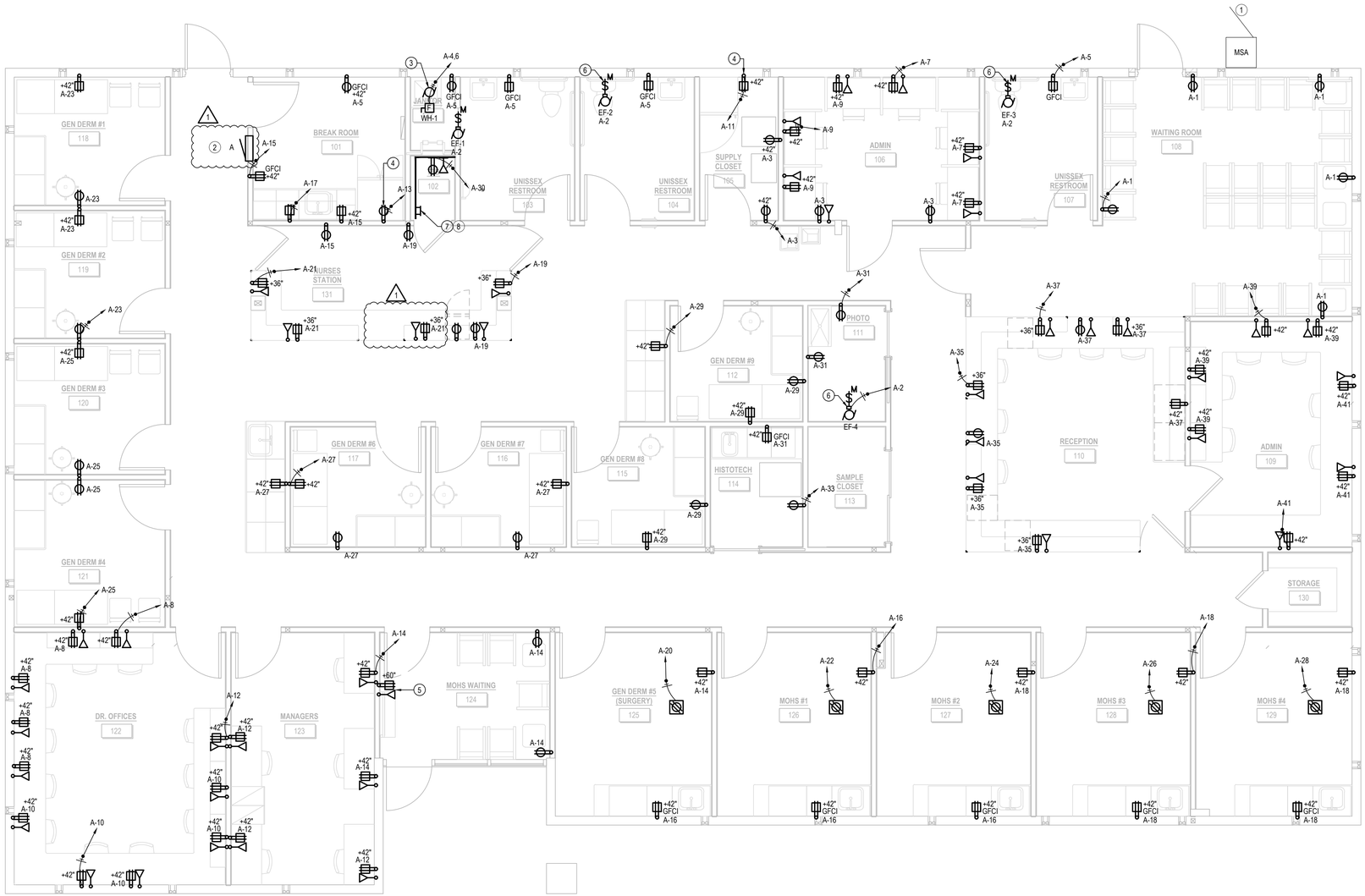

1 POWER PLAN
SCALE: 1/4" = 1'-0"

NORTH

GENERAL NOTES

1. SEE SHEET E801 FOR SINGLE LINE DIAGRAM, CONDUIT, AND CONDUCTOR SIZING.
2. SEE ARCHITECTURAL DRAWINGS FOR ADDITIONAL INFORMATION.
3. SEE ARCHITECTURAL SHEETS FOR ADDITIONAL REQUIREMENTS.
4. SEE MECHANICAL AND PLUMBING DRAWINGS FOR ADDITIONAL INFORMATION.
5. PROVIDE RING AND STRING FROM DATA DEVICE LOCATION TO ACCESSIBLE CEILING SPACE.
6. PROVIDE #10 NEUTRAL CONDUCTOR SERVING MODULAR FURNITURE SYSTEMS.
7. PROVIDE #10 NEUTRAL CONDUCTOR SERVING MODULAR FURNITURE EQUIPMENT CONNECTIONS.
8. CONTRACTOR TO FIELD VERIFY EXISTING POWER BRANCH CIRCUIT TO REMAIN PRIOR TO COMMENCEMENT OF NEW WORK.
9. CONTRACTOR TO PROVIDE P-TOUCH LABELS ON ALL TENANT WIRING DEVICES INCLUDING PANEL NAME AND CIRCUIT DESIGNATION.
10. CONTRACTOR TO MAINTAIN CIRCUITRY CONTINUITY TO EXISTING SPACE OUTSIDE THIS SCOPE OF WORK.
11. COORDINATE WITH TENANT IT PERSONNEL FOR DEVICE LOCATIONS PRIOR TO ROUGH IN.
12. COORDINATE NEMA CONFIGURATION OF SPECIAL PURPOSE WIRING DEVICES.
13. CONFIRM HEIGHT OF ALL OUTLETS WITH ARCHITECTURAL ELEVATION DRAWINGS PRIOR TO ROUGH-IN.
14. CONFIRM OUTLET LOCATIONS WITH FURNITURE VENDOR AND FINAL LOCATIONS OF FURNITURE PRIOR TO ROUGH-IN.
15. DATA DEVICE LOCATIONS TO BE MOUNTED ADJACENT TO POWER WIRE DEVICE AT SAME ELEVATION, U.O.N.
16. TELE/DATA DEVICES TO BE MOUNTED ADJACENT TO POWER WIRING DEVICE, U.O.N.
17. ALL WIRING DEVICES 15 TO 20 AMPERE INSTALLED IN KITCHENS OR WITHIN 6' OF SINK OUTSIDE EDGES SHALL HAVE GROUND FAULT CIRCUIT INTERRUPTER PROTECTION (GFCI) PER CEC 210.8(B).
18. IF NEW OR REPLACED RECEPTACLES OCCUR, NEW RECEPTACLES TO BE GFCI PROTECTED IN CHILD CARE AREAS. ADDITIONALLY, RECEPTACLES TO BE TAMPER-PROOF CONSTRUCTION.
19. PROVIDE INSULATED COPPER EQUIPMENT GROUNDING CONDUCTOR IN ALL RACEWAYS THAT SERVE WIRING DEVICES IN PATIENT CARE AREAS. BOND EQUIPMENT GROUNDING CONDUCTOR TO RECEPTACLE GROUND TERMINAL AND PROVIDE BONDING JUMPER TO METAL DEVICE JUNCTION BOX.
20. PVC IS NOT ALLOWED IN ANY PATIENT CARE AREAS (CONDUITS MUST BE CONSIDERED A GROUNDING PATHWAY.
21. WIRING IN PATIENT CARE AREAS SHALL COMPLY WITH CEC 517.3(A) AND (B).
22. HCF MC CABLE IS REQUIRED IN PATIENT CARE AREAS.

KEYNOTES

1. APPROXIMATE LOCATION OF EXISTING ELECTRICAL EQUIPMENT.
2. APPROXIMATE LOCATION OF NEW PANEL BOARD.
3. PROVIDE LOCKABLE TYPE CIRCUIT BREAKER FOR WATER HEATER CIRCUIT.
4. PROVIDE GFCI BREAKER FOR REFRIGERATOR BRANCH CIRCUIT.
5. PROVIDE RECESSED DUAL-GANG OUTLET FOR TV. VERIFY HEIGHT WITH ARCHITECT PRIOR TO ROUGH-IN.
6. PROVIDE 20 AMP, NEMA 1, MOTORIZE SWITCH.
7. PROVIDE 4'x8'x3/4" FIRE RESISTANT PLYWOOD TELEPHONE BACKBOARD WITH FIRE SEAL FACING OUTWARD . PROVIDE TELECOMMUNICATIONS GROUND BAR WITH #6 COPPER BONDING CONDUCTORS FROM BUILDING GROUNDING ELECTRODE SYSTEM TO GROUND BAR. PLYWOOD SHALL BE PRESSURE TREATED AND PAINTED WITH NON-CONDUCTIVE GRAY PAINT.
8. RELOCATE EXISTING TIMECLOCK. COORDINATE EXACT PLACEMENT WITH ARCHITECT PRIOR TO ROUGH IN.

NDAA group architects
4990 N Harbor Drive, Ste 201
San Diego, CA 92106
tel: 619-297-8066
web: www.noaainc.com

REGISTERED PROFESSIONAL ENGINEER
BRIAN W. BETTAGLIA
E19124
Exp. 06/30/24
ELECTRICAL
STATE OF CALIFORNIA

RBCE JOB #2023-0048

DO NOT SCALE DRAWINGS.
ANY DISCREPANCIES TO BE REVIEWED WITH THE ARCHITECT.

SAN DIEGO FAMILY DERMATOLOGY

222 W. MADISON AVE.
EL CAJON, CA 92020

REVISION SCHEDULE		
NO	DATE	ISSUE
1	7/24/2023	1ST CITY REVISION

Project No:	2023-0048
Project Start Date:	2023-04-11
Drawn:	TW/
Checked:	RB
Revision:	--

Sheet Name:

POWER PLAN

RB Consulting Engineers, Inc.
DEVELOP.DESIGN.DELIVER
1044 PIONEER WAY, SUITE E
EL CAJON, CA 92020
TEL: 619.334.6020

Scale: AS SHOWN

Sheet No:

E301

7/27/2023 3:26 PM

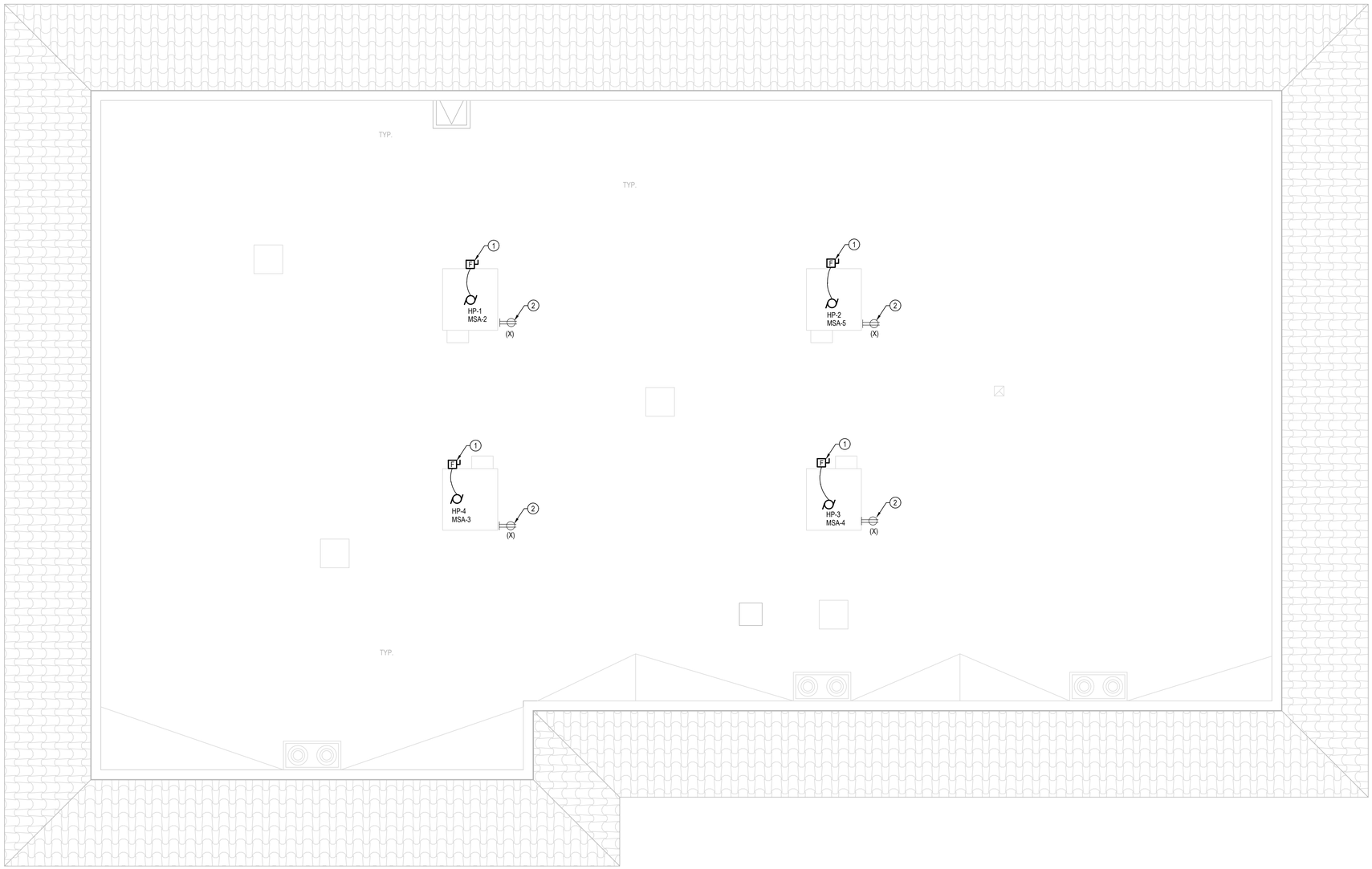

1 ROOF PLAN
SCALE: 1/4" = 1'-0"

NORTH

GENERAL NOTES

1. SEE ARCHITECTURAL DRAWINGS FOR ADDITIONAL REQUIREMENTS.
2. SEE MECHANICAL AND PLUMBING DRAWINGS FOR ADDITIONAL REQUIREMENTS.
3. PROVIDE CONVENIENCE OUTLETS WITHIN 25' OF ALL MECHANICAL EQUIPMENT.
4. PROVIDE FLEXIBLE SEAL TYPE CONDUIT FOR CONNECTION TO ALL HVAC EQUIPMENT.
5. ALL EXTERIOR ELECTRICAL DEVICES TO BE NEMA 3R WEATHERPROOF.

KEYNOTES

1. PROVIDE 60 AMP, 250V, 1-PHASE, HEAVY DUTY, NEMA 3R, FUSED DISCONNECT SWITCH. COORDINATE FUSE TYPE AND SIZE WITH EQUIPMENT NAMEPLATE PRIOR TO ROUGH IN. REUSE EXISTING CONDUIT AND WIRE TO NEW DISCONNECT.
2. EXISTING ROOFTOP OUTLETS FOR MECHANICAL CONVENIENCE.

NOAA group architects
4990 N Harbor Drive, Ste 201
San Diego, CA 92106

tel: 619-297-8066
web: www.noaainc.com

REGISTERED PROFESSIONAL ENGINEER
BRYAN W. BERTALAN
E19124
Exp. 06/30/24
ELECTRICAL
STATE OF CALIFORNIA

RBCE JOB #2023-0048

DO NOT SCALE DRAWINGS.
ANY DISCREPANCIES TO BE REVIEWED WITH THE ARCHITECT.

SAN DIEGO FAMILY DERMATOLOGY

222 W. MADISON AVE.
EL CAJON, CA 92020

REVISION SCHEDULE

NO	DATE	ISSUE
1	7/24/2023	1ST CITY REVISION

Project No:	2023-0048
Project Start Date:	2023-04-11
Drawn:	TW/
Checked:	RB
Revision:	--

Sheet Name:

ROOF PLAN

RB Consulting Engineers, Inc.
DEVELOP.DESIGN.DELIVER
1044 PIONEER WAY, SUITE E
EL CAJON, CA 92020
TEL: 619.334.6020

Scale: AS SHOWN

Sheet No:

E302

7/27/2023 3:26 PM

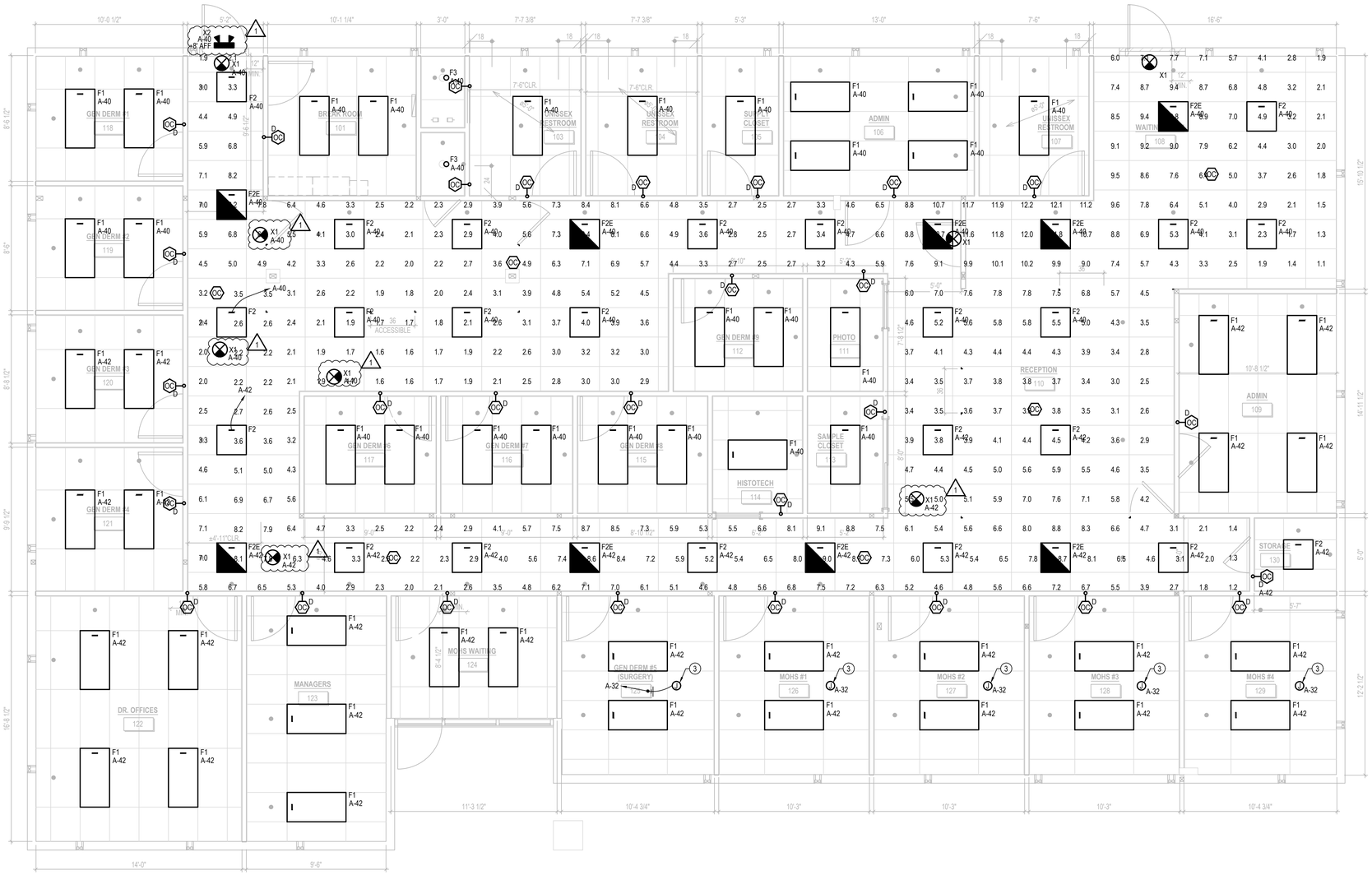

1 EMERGENCY EGRESS PLAN
SCALE: 1/4" = 1'-0"

NORTH

GENERAL EGRESS NOTES

1. VALUE SHOWN FOR EGRESS POINT BY POINT ARE IN FOOT-CANDLE MEASUREMENTS.
2. DO NOT SWITCH EXIT SIGNS UNITS (ON CONTINUOUSLY).
3. THE MEANS OF EGRESS SHALL BE ILLUMINATED AT ALL TIMES BUILDING SPACE IS SERVED, IN ACCORDANCE WITH CA. BUILDING CODE, SECTION 1008.
4. MEANS OF EGRESS ILLUMINATION LEVEL SHALL BE NOT LESS THAN 1-FOOT CANDLE AT THE WALKING SURFACE AND EQUIPPED WITH MINIMUM 90 MINUTE BATTERY BACKUP WHERE REQUIRED.
5. ADDITIONAL ILLUMINATION EXIT SIGNS MAY BE REQUIRED BY FIRE DEPARTMENT TO ADEQUATELY INDICATE PATH OF EGRESS.

EGRESS PHOTOMETRIC SCHEDULE

AVERAGE FOOT-CANDLES	4.95
MAXIMUM FOOT-CANDLES	12.2
MINIMUM FOOT-CANDLES	1.1
MINIMUM TO MAXIMUM FC RATIO	0.09
MAXIMUM TO MINIMUM FC RATIO	11.57
AVERAGE TO MINIMUM FC RATIO	4.71

NOAA group architects
4990 N Harbor Drive, Ste 201
San Diego, CA 92106

tel: 619-297-8066
web: www.noaainc.com

REGISTERED PROFESSIONAL ENGINEER
ARVIN W. BERTALAN
E19124
Exp. 06/30/24
ELECTRICAL
STATE OF CALIFORNIA

RBCE JOB #2023-0048

DO NOT SCALE DRAWINGS.
ANY DISCREPANCIES TO BE REVIEWED WITH THE ARCHITECT.

SAN DIEGO FAMILY DERMATOLOGY

222 W. MADISON AVE.
EL CAJON, CA 92020

REVISION SCHEDULE

NO	DATE	ISSUE
1	7/24/2023	1ST CITY REVISION

Project No:	2023-0048
Project Start Date:	2023-04-11
Drawn:	TW/
Checked:	RB
Revision:	--
Sheet Name:	

EMERGENCY EGRESS PLAN

RB
Consulting Engineers, Inc.
DEVELOP.DESIGN.DELIVER
1044 PIONEER WAY, SUITE E
EL CAJON, CA 92020
TEL: 619.334.6020

Scale: AS SHOWN
Sheet No:

E501

7/27/2023 3:26 PM

GENERAL NOTES

1. ALL LIGHTING CONTROL PRODUCT ARE SPECIFIED AROUND ACUITY BRANDS CONTROLS, U.O.N. OR EQUAL CONTROL MANUFACTURERS ARE AVAILABLE. CONTRACTOR TO PROVIDE ALL COMPONENTS NECESSARY FOR A COMPLETE AND OPERATIONAL SYSTEM.
2. SEE LIGHTING FLOOR PLAN FOR FIXTURE TYPES, CONTROL DEVICE LOCATIONS, AND ADDITIONAL REQUIREMENTS.

PRODUCT LEGEND

PRODUCT NUMBER	DESCRIPTION
NWSX PDT LV DX WH	1 CHANNEL ON/OFF TOGGLE, DIMMING, WITH INTEGRAL DUAL TECHNOLOGY OCCUPANCY SENSOR
NPODM DX WH	1 CHANNEL ON/OFF TOGGLE, RAISE/LOWER DIMMING
NPODM 2P DX WH	2 CHANNEL ON/OFF TOGGLE, RAISE/LOWER DIMMING
NPODM 4P DX WH	4 CHANNEL ON/OFF TOGGLE, RAISE/LOWER DIMMING
NPOD GFX WH	SCENE CONTROLLER WITH 16 CHANNEL DIMMING CONTROL
NCM ADCX DZ	AUTOMATIC DIMMING CONTROL PHOTOCELL - CEILING MOUNT, LOW VOLTAGE DUAL ZONE (NO WIRES)
NCM 10	STANDARD RANGE 360 DEGREE SENSOR-CEILING MOUNT, LOW VOLTAGE, PIR OCCUPANCY SENSOR
NCM PDT 10	STANDARD RANGE 360 DEGREE SENSOR-CEILING MOUNT, LOW VOLTAGE, DUAL TECHNOLOGY (PDT)
NPP16 PL T24	16 AMP RELAY PACK FOR PLUG LOAD CONTROL; CHASE NIPPLE MOUNTING
NPP16 D	16 AMP RELAY PACK FOR 0-10V DIMMING CONTROL; CHASE NIPPLE MOUNTING
NPP16 D ER	16 AMP RELAY PACK FOR 0-10V DIMMING CONTROL WITH UL 924 EM SHUNT; CHASE NIPPLE MOUNTING
NSP5 PCD 2W	120/277V, 5 AMP RELAY PACK FOR 2 WIRE INCANDESCENT DIMMING CONTROL
NSP5 PCD ELV 120	120/277V, 5 AMP RELAY PACK FOR ELECTRONIC LOW VOLT DIMMING CONTROL
NSP5 PCD MLV	120/277V, 5 AMP RELAY PACK FOR MAGNETIC LOW VOLTAGE DIMMING CONTROL

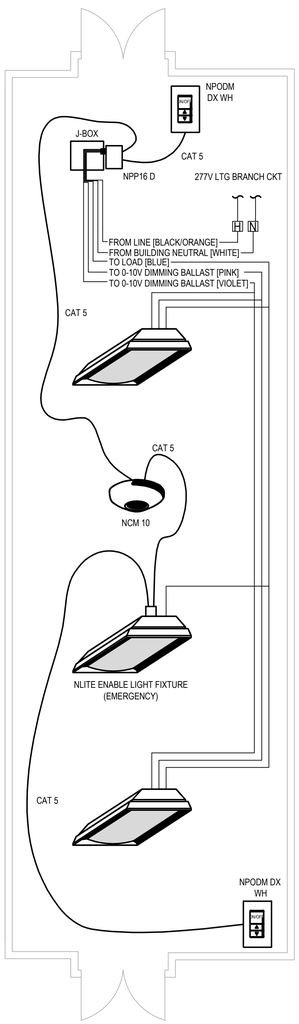

HALLWAY DIAGRAM

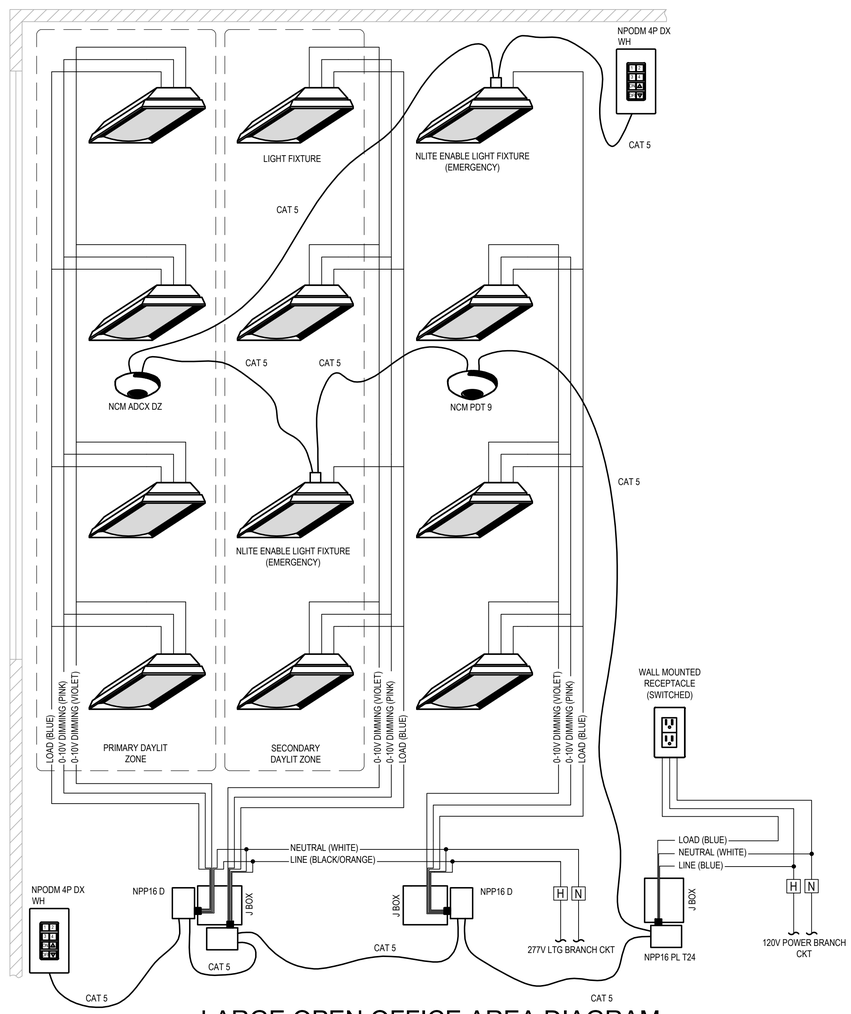

LARGE OPEN OFFICE AREA DIAGRAM

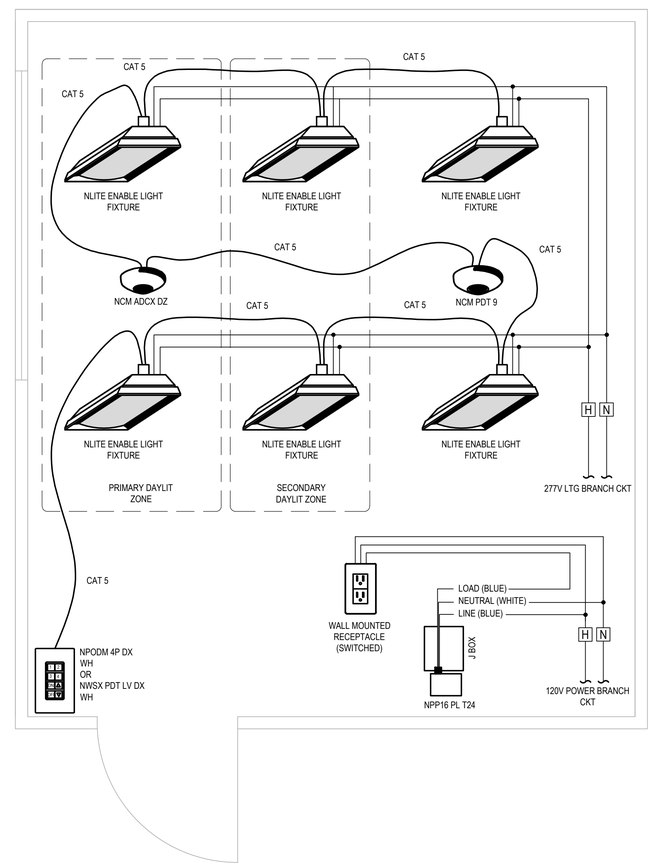

PRIVATE OFFICES / CONFERENCE ROOMS / SUPPORT SPACES

NDAA group architects
4990 N Harbor Drive, Ste 201
San Diego, CA 92106
tel: 619-297-8066
web: www.ngaainc.com

REGISTERED PROFESSIONAL ENGINEER
BRIAN W. BERTALAN
E19124
Exp. 06/30/24
ELECTRICAL
STATE OF CALIFORNIA

RBCE JOB #2023-0048

DO NOT SCALE DRAWINGS.
ANY DISCREPANCIES TO BE REVIEWED WITH THE ARCHITECT.

SAN DIEGO FAMILY DERMATOLOGY

222 W. MADISON AVE.
EL CAJON, CA 92020

REVISION SCHEDULE

NO	DATE	ISSUE
1	7/24/2023	1ST CITY REVISION

Project No:	2023-0048
Project Start Date:	2023-04-11
Drawn:	TW/
Checked:	RB
Revision:	--

Sheet Name:

LIGHTING CONTROL DETAILS

Scale: AS SHOWN

Sheet No:

E701

RB Consulting Engineers, Inc.
DEVELOP.DESIGN.DELIVER
1044 PIONEER WAY, SUITE E
EL CAJON, CA 92020
TEL: 619.334.6020

7/27/2023 3:26 PM

GENERAL NOTES

1. ALL ELECTRICAL FEEDER CONDUIT AND CONDUCTORS ARE EXISTING TO REMAIN., U.O.N.
2. ALL 600V AND LESS ELECTRICAL CONDUCTORS ARE NEW, THWN-2/THHN INSULATION, AND COPPER MATERIAL.
3. INTERIOR RACEWAY TO BE EMT WITH SET-SCREW FITTINGS. EXTERIOR RACEWAY TO BE EMT WITH RAIN-TIGHT COMPRESSION FITTINGS.
4. CONTRACTOR TO FIELD VERIFY BRANCH CIRCUITRY PRIOR TO COMMENCEMENT OF WORK.
5. RE-LABEL SWITCHBOARD BREAKER SPACES TO REFLECT UPDATED UNITS.

KEYNOTES

1. EXISTING SDG&E METER.
2. EXISTING CONNECTION TO EXISTING BUILDING NEAREST COLD WATER PIPE AND/OR BUILDING STEEL FOR COMMON GROUNDING SYSTEM.
3. REVISED LOAD TO EXISTING PANEL PER TENANT IMPROVEMENT.
4. EXISTING BREAKER WITH EXISTING LOAD TO REMAIN.
5. UTILIZE EXISTING CIRCUIT BREAKER FOR NEW TENANT IMPROVEMENT LOAD.
6. NEW PANEL IN EXISTING LOCATION.
7. REMOVE ALL WIRING DEVICES, FROM AC-5 BACK TO SOURCE PANEL BOARD. MAKE BREAKER SPARE.
8. FUSE DISCONNECT DOWN TO 30A, PER MANUFACTURER NAMEPLATE.
9. EXISTING BREAKER MAKE SPARE.

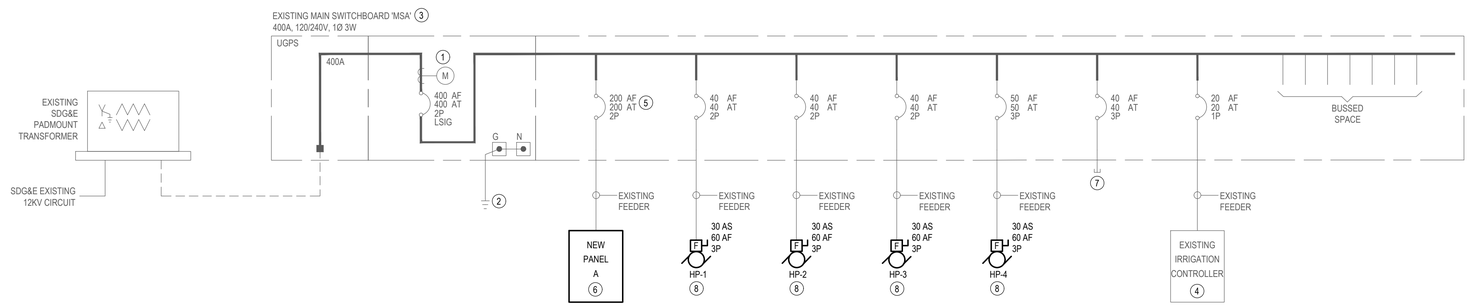

MSA

ROOM		VOLTS 240/120V 2P 3W	AIC 65,000
MOUNTING FLOOR		BUS AMPS 400	MAIN BKR 400
FED FROM UTILITY		NEUTRAL 100%	LUGS STANDARD
NOTE			

CKT #	BREAKER TRIP/POLES	CIRCUIT DESCRIPTION	KVA LOAD A	KVA LOAD B	FEEDER RACEWAY AND CONDUCTORS
1	200/2	PANEL A	21.1	18.4	2"C,2#3/0,#3/0N,#6G
2	40/2	HP-1	3	3	1/2"C,2#8,#10G
3	40/2	HP-4	3	3	1/2"C,2#8,#10G
4	40/2	HP-3	3	3	1/2"C,2#8,#10G
5	50/2	HP-2	4.03	4.03	3/4"C,2#6,#10G
9 6	40/2	SPARE	0	0	-
7	20/2	IRRIGATION	0.09	0.09	1/2"C,2#12,#12N,#12G
		TOTAL CONNECTED KVA BY PHASE	34.2	31.5	

	CONN KVA	CALC KVA			CONN KVA	CALC KVA	
LIGHTING	5.29	6.61	(125%)	MOTORS	26.2	26.2	(100%)
LARGEST MOTOR	8.06	2.02	(25%)	RECEPTACLES	26.2	18.1	(50%>10)
				NONCONTINUOUS	8	8	(100%)
				TOTAL LOAD		61	
				BALANCED LOAD		254 A	

FAULT CURRENT SCHEDULE

DEVICE	FAULT	AIC RATING	L-N VOLTS	UTILITY FAULT	FED FROM DEVICE	FED FROM FAULT	FEEDER SIZE	FEEDER X / 1000'	FEEDER R / 1000'	FEEDER LENGTH	TOTAL MOTOR FAULT	DIRECTLY CONNECTED MOTOR LOAD KVA	DIRECTLY CONNECTED MOTOR LOAD FAULT
A	16,336	22,000	120V	16,318	MSA	65,000	#3/0	0.042	0.077	69'	18	0.144	2

PANEL: A

ROOM		VOLTS 240/120V 2P 3W	AIC 22,000
MOUNTING FLUSH		BUS AMPS 200	MAIN BKR 200
FED FROM MSA		NEUTRAL 100%	LUGS STANDARD
NOTE			

CKT #	CKT BKR	LOAD KVA	CIRCUIT DESCRIPTION		CKT #	CKT BKR	LOAD KVA	CIRCUIT DESCRIPTION
1	20/1	0.9	WAITING REC	a	2	20/1	0.144	EF-1, EF-2, EF-3, EF-4
3	20/1	0.72	GENERAL REC	b	4	20/2	4.5	WH-1
5	20/1	0.9	BACK WALL GFCI REC	a	6	|		
7	20/1	0.54	ADMIN REC	b	8	20/1	0.9	DR OFFICE REC
9	20/1	0.54	ADMIN REC	a	10	20/1	0.9	DR OFFICE REC
11	20/1	1.2	SUPPLY FRIDGE	b	12	20/1	0.72	MANAGER REC
13	20/1	1.2	BREAK FRIDGE	a	14	20/1	0.9	MOHS REC
15	20/1	0.54	BREAK REC	b	16	20/1	0.72	MOHS #1,2 REC
17	20/1	1.1	BREAK MICROWAVE	a	18	20/1	0.9	MOHS #3,4 REC
19	20/1	0.54	NURSE STATION REC	b	20	20/1	1.4	GEN EXAM CHAIR
21	20/1	0.54	NURSE STATION REC	a	22	20/1	1.4	MOHS #1 EXAM CHAIR
23	20/1	0.72	GEN DERM #1,2 REC	b	24	20/1	1.4	MOHS #2 EXAM CHAIR
25	20/1	0.72	GEN DERM #3,4 REC	a	26	20/1	1.4	MOHS #3 EXAM CHAIR
27	20/1	0.9	GEN DERM #6,7 REC	b	28	20/1	1.4	MOHS #4 EXAM CHAIR
29	20/1	0.9	GEN DERM #8,9 REC	a	30	20/1	1	DED IT
31	20/1	0.54	PHOTO/HISTOTECH REC	b	32	20/1	0	SPARE
33	20/1	1.32	CRYOSTAT	a	34	20/1	0	SPARE
35	20/1	0.72	RECEPTION REC	b	36	20/1	1	EXT LTS
37	20/1	0.72	RECEPTION REC	a	38	20/1	1.5	EX LTG
39	20/1	0.72	ADMIN REC	b	40	20/1	1.44	LTG
41	20/1	0.54	ADMIN REC	a	42	20/1	1.35	LTG

	CONN KVA	CALC KVA			CONN KVA	CALC KVA	
LIGHTING	5.29	6.61	(125%)	MOTORS	0.144	0.144	(100%)
LARGEST MOTOR	0.05	0.013	(25%)	RECEPTACLES	26.1	18	(50%>10)
				NONCONTINUOUS	8	8	(100%)
				TOTAL LOAD		32.8	
				BALANCED LOAD		137 A	
				PHASE A		107%	
				PHASE B		93%	

NOAA group architects
4990 N Harbor Drive, Ste 201
San Diego, CA 92106
tel: 619-297-8066
web: www.noaainc.com

REGISTERED PROFESSIONAL ENGINEER
BRIAN W. BERTALAN
E19124
Exp. 06/30/24
ELECTRICAL
STATE OF CALIFORNIA

RBCE JOB #2023-0048

DO NOT SCALE DRAWINGS.
ANY DISCREPANCIES TO BE REVIEWED WITH THE ARCHITECT.

SAN DIEGO FAMILY DERMATOLOGY

222 W. MADISON AVE.
EL CAJON, CA 92020

REVISION SCHEDULE		
NO	DATE	ISSUE
1	7/24/2023	1ST CITY REVISION

Project No: 2023-0048
Project Start Date: 2023-04-11
Drawn: TW/
Checked: RB
Revision: --
Sheet Name:

SINGLE LINE DIAGRAM

Scale: AS SHOWN
Sheet No:

E801

RB Consulting Engineers, Inc.
DEVELOP.DESIGN.DELIVER
1044 PIONEER WAY, SUITE E
EL CAJON, CA 92020
TEL: 619.334.6020

7/27/2023 3:26 PM