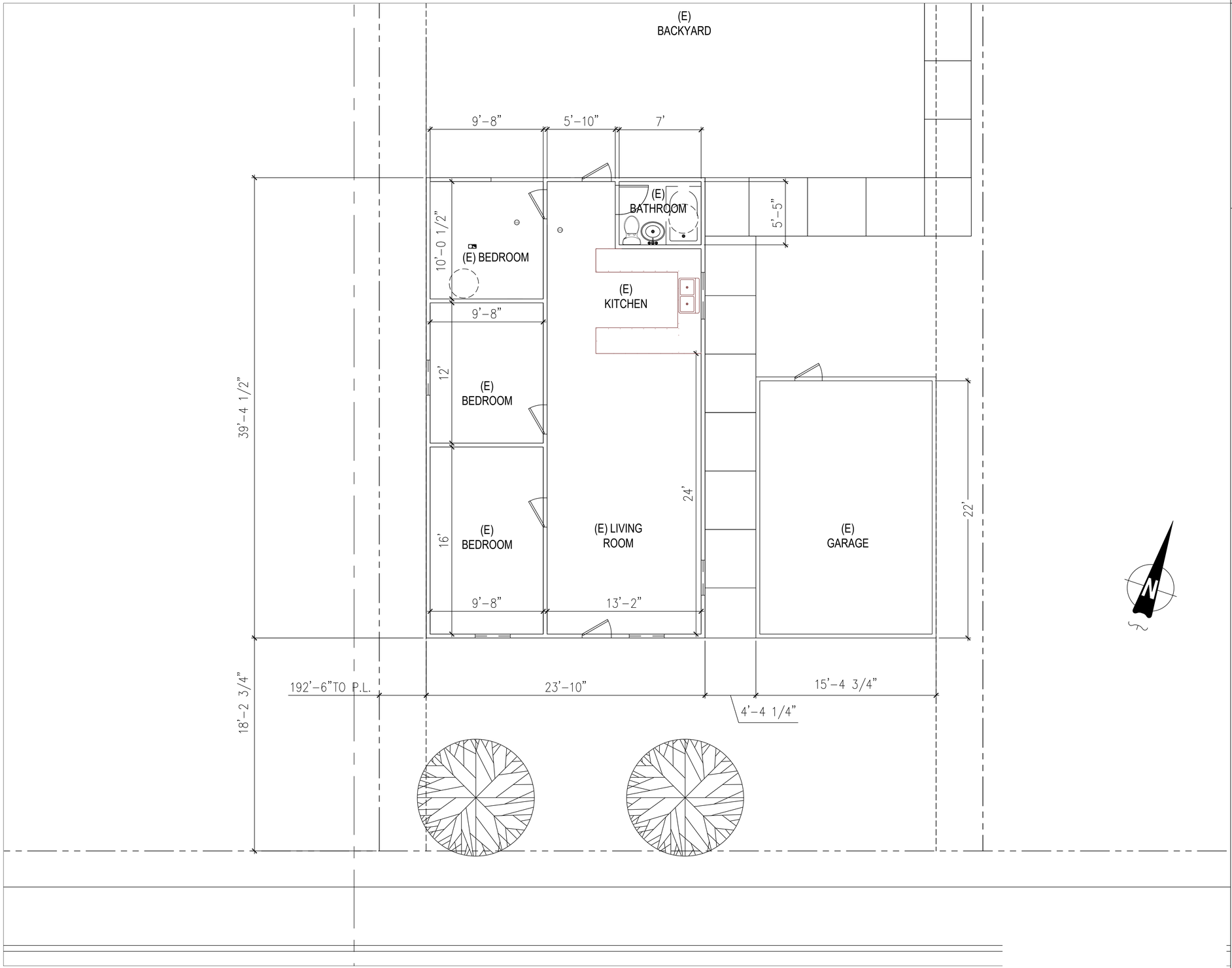

EXISTING FLOOR PLAN
1/4" = 1'-0"

FLOOR PLAN NOTES

1. EXTERIOR WALLS WITHIN 3 FEET OF PROPERTY LINE (SPRINKLERS) OR 5 FEET OF PROPERTY LINE (WITHOUT SPRINKLERS) REQUIRE 1-HOUR FIRE RATING FOR EXPOSURE TO BOTH SIDES

2. PROJECTIONS:
   - PROHIBITED WITHIN 2 FEET OF PROPERTY LINE
   - 1-HOUR FIRE RATING ON THE UNDERSIDE WITHIN 3FT OF PROPERTY LINE (SPRINKLERS)
   - 1-HOUR FIRE RATING ON THE UNDERSIDE WITHIN 5FT OF PROPERTY LINE (WITHOUT SPRINKLERS)

3. OPENINGS:
   - PROHIBITED WITHIN 3FT OF PROPERTY LINE
   - MAXIMUM 25% OF WALL AREA WITHIN 5 FEET OF PROPERTY LINE (WITHOUT SPRINKLERS)

4. PENETRATIONS:
   - 1-HOUR FIRE-RATED PENETRATIONS OF WALLS WITHIN 3FT OF PROPERTY LINE (SPRINKLERS)
   - 1-HOUR FIRE-RATED PENETRATIONS OF WALLS WITHIN 5FT OF PROPERTY LINE (WITHOUT SPRINKLERS)

5. CONCRETE LANDING WITH MIN 36" DEPTH AND A MAXIMUM OF 1-1/2" LOWER THAN TOP OF DOOR THRESHOLD

AZTEC DRAFTING & DESIGN
9119 JAMACHA RD, SUITE 115
SPRING VALLEY, CA 91977
CELL: 619-414-8506

DRAWINGS PROVIDED BY:
AZTEC DRAFTING & DESIGN
DESIGNER: LEONEL SOLIS
EMAIL: LEONEL@GMAIL.COM

JUAN MANUEL DIARTE
DETACH ADDITIONAL DWELLING UNIT
1523 E 14th St. NATIONAL CITY CA 91950
APN: 557-342-09-00
UTILITY: SDG&E
AJH: NATIONAL CITY

EXISTING FLOOR PLAN

REVISION		
0	-	02/14/22

PROJECT NO.
P013
SHEET NO.
A-1

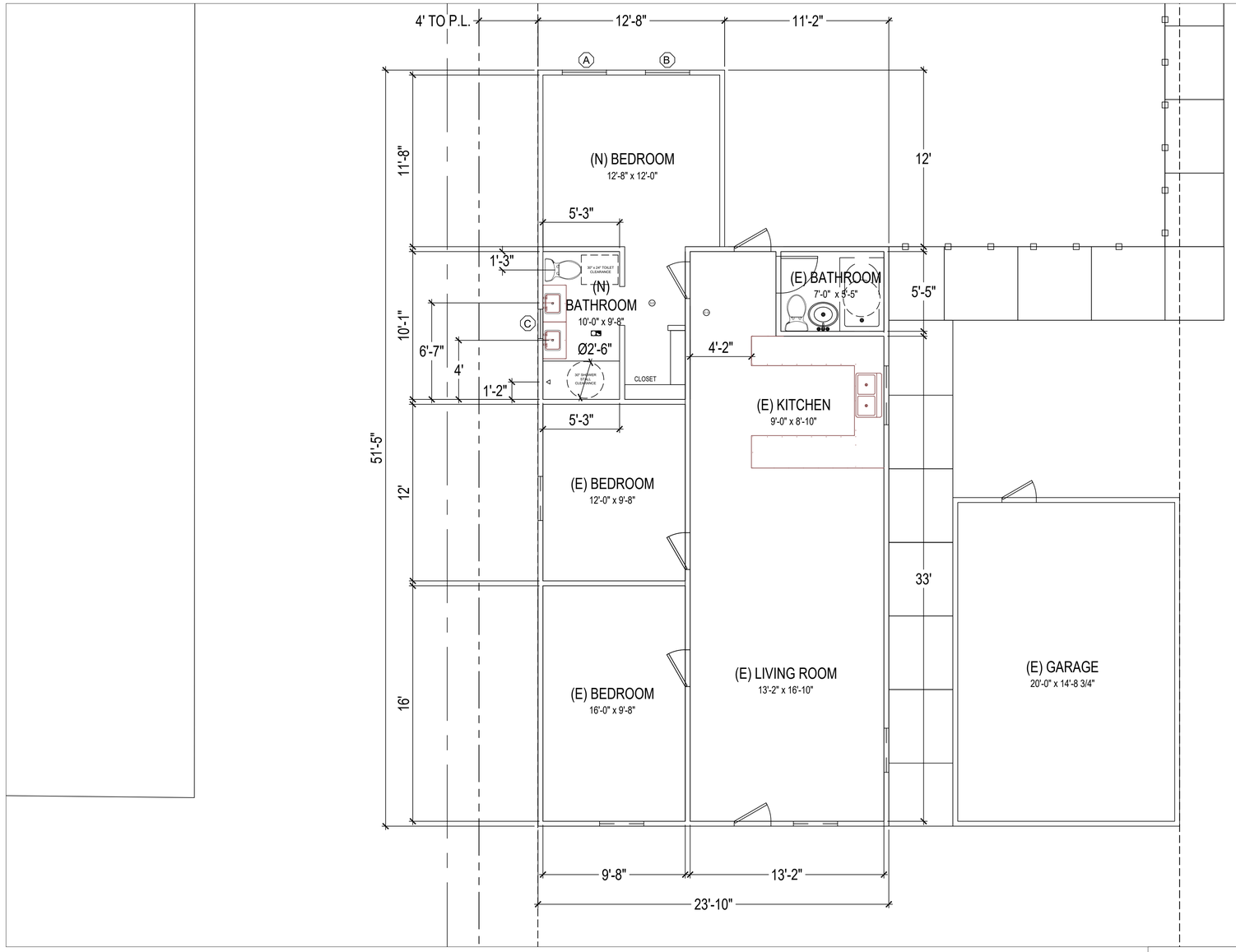

NEW ADDITION FLOOR PLAN
1/4" = 1'-0"

FLOOR PLAN NOTES

1. EXTERIOR WALLS WITHIN 3 FEET OF PROPERTY LINE (SPRINKLERS) OR 5 FEET OF PROPERTY LINE (WITHOUT SPRINKLERS) REQUIRE 1-HOUR FIRE RATING FOR EXPOSURE TO BOTH SIDES
2. PROJECTIONS:
   - PROHIBITED WITHIN 2 FEET OF PROPERTY LINE
   - 1-HOUR FIRE RATING ON THE UNDERSIDE WITHIN 3FT OF PROPERTY LINE (SPRINKLERS)
   - 1-HOUR FIRE RATING ON THE UNDERSIDE WITHIN 5FT OF PROPERTY LINE (WITHOUT SPRINKLERS)
3. OPENINGS:
   - PROHIBITED WITHIN 3FT OF PROPERTY LINE
   - MAXIMUM 25% OF WALL AREA WITHIN 5 FEET OF PROPERTY LINE (WITHOUT SPRINKLERS)
4. PENETRATIONS:
   - 1-HOUR FIRE-RATED PENETRATIONS OF WALLS WITHIN 3FT OF PROPERTY LINE (SPRINKLERS)
   - 1-HOUR FIRE-RATED PENETRATIONS OF WALLS WITHIN 5FT OF PROPERTY LINE (WITHOUT SPRINKLERS)
5. CONCRETE LANDING WITH MIN 36" DEPTH AND A MAXIMUM OF 1-1/2" LOWER THAN TOP OF DOOR THRESHOLD

PLUMBING NOTES

1. MIN. ¼" PER FOOT SLOPE FOR WASTE PIPES PER SECTION 708 CPC
2. BUILDING DRAIN AND VENT PIPING MATERIALS SHALL COMPLY WITH SECTIONS 701.0 AND 903.0 OF THE CALIFORNIA PLUMBING CODE.
3. ALL SANITARY SYSTEM MATERIALS SHALL BE LISTED BY AN APPROVED LISTING AGENCY.
4. EACH VENT SHALL RISE VERTICALLY TO A POINT NOT LESS THAN SIX(6) INCHES ABOVE THE FLOOD LEVEL RIM OF THE FIXTURE SERVED BEFORE OFFSETTING HORIZONTALLY OR BEFORE BEING CONNECTED TO ANY OTHER VENT.
5. ALL DRAINAGE WASTE AND VENT PIPE SHALL COMPLY WITH TABLE 703.2 CPC.
6. SHOWER AND TUB-SHOWER COMBINATIONS SHALL BE PROVIDED WITH MIXING VALVES PER SECTION 408.3 CPC.
7. TOILETS SHALL BE ULTRA-LOW FLUSH TYPE (1.28 G.P.F. MAX.)
8. EACH SHOWERHEAD SHALL NOT EXCEED A WATER FLOW OF 1.8 GPM.
9. KITCHEN SINK FAUCET SHALL NOT EXCEED A WATER FLOW 1.8 GPM.
10. EACH LAVATORY FAUCET SHALL NOT EXCEED A WATER FLOW OF 1.2 GPM.
11. ALL SANITARY SYSTEM MATERIALS SHALL BE LISTED BY AN APPROVED LISTING AGENCY.
12. COPPER PIPING FOR ALL POTABLE WATER SYSTEMS.

SHOWER PLAN NOTES

1. MIN. ¼" PER FOOT SLOPE FOR WASTE PIPES PER SECTION 708 CPC
2. BUILDING DRAIN AND VENT PIPING MATERIALS SHALL COMPLY WITH SECTIONS 701.0 AND 903.0 OF THE CALIFORNIA PLUMBING CODE.
3. ALL SANITARY SYSTEM MATERIALS SHALL BE LISTED BY AN APPROVED LISTING AGENCY.
4. EACH VENT SHALL RISE VERTICALLY TO A POINT NOT LESS THAN SIX(6) INCHES ABOVE THE FLOOD LEVEL RIM OF THE FIXTURE SERVED BEFORE OFFSETTING HORIZONTALLY OR BEFORE BEING CONNECTED TO ANY OTHER VENT.
5. ALL DRAINAGE WASTE AND VENT PIPE SHALL COMPLY WITH TABLE 703.2 CPC.
6. SHOWER AND TUB-SHOWER COMBINATIONS SHALL BE PROVIDED WITH MIXING VALVES PER SECTION 408.3 CPC.
7. TOILETS SHALL BE ULTRA-LOW FLUSH TYPE (1.28 G.P.F. MAX.)
8. EACH SHOWERHEAD SHALL NOT EXCEED A WATER FLOW OF 1.8 GPM.
9. KITCHEN SINK FAUCET SHALL NOT EXCEED A WATER FLOW 1.8 GPM.
10. EACH LAVATORY FAUCET SHALL NOT EXCEED A WATER FLOW OF 1.2 GPM.
11. ALL SANITARY SYSTEM MATERIALS SHALL BE LISTED BY AN APPROVED LISTING AGENCY.
12. COPPER PIPING FOR ALL POTABLE WATER SYSTEMS.

WINDOW SCHEDULE

MARK	DIMENSION	TYPE	TEMPERED	U-factor	SHGC
A	6'-0" x 4'-0"	SLIDING		0.3000	0.2300
B	3'-0" x 3'-0"	SLIDING		1.3000	0.2300
C	2'-0" x 2'-0"	SLIDING		2.3000	0.2300

EXTERIOR WINDOWS, EXTERIOR GLAZED DOORS, GLAZED OPENINGS WITHIN EXTERIOR DOORS, GLAZED OPENINGS WITHIN EXTERIOR GARAGE DOORS, AND EXTERIOR STRUCTURAL GLASS VENEER SHALL COMPLY WITH ONE OF THE FOLLOWING: (SELECT ONE)

A. MULTI-PANE GLAZING WITH A MINIMUM OF ONE TEMPERED PANE MEETING THE REQUIREMENTS OF SECTION 2406 SAFETY GLAZING, AND WHERE ANY GLAZING FRAMES MADE OF VINYL MATERIALS SHALL HAVE WELDED CORNERS, METAL REINFORCEMENT IN INTERLOCK AREA, AND BE CERTIFIED TO AAMA/WDMA/CSA 101/I.S.2/A40
B. MINIMUM 20-MIN FIRE-RESISTANCE-RATED.
C. MEET PERFORMANCE REQUIREMENTS OF SFM STANDARD 12-7A-2

ELECTRICAL LEGEND

DUPLEX OUTLET	HIGH EFFICACY RECESSED LIGHT
WALL SWITCH	GARBAGE DISPOSAL
GARBAGE DISPOSAL SWITCH	
VACANCY SENSOR	
4" DIA DRYER VENT	
SMOKE DETECTOR	FAN & LIGHT COMBO
CARBON MONOXIDE ALARM	
EXHAUST FAN AND LIGHT COMBINATION	
HIGH EFFICACY LIGHT FIXTURE	

AZTEC DRAFTING & DESIGN
9119 JAMACHA RD, SUITE 115
SPRING VALLEY, CA 91977
CELL: 619-414-8506

DRAWINGS PROVIDED BY:
AZTEC DRAFTING & DESIGN
DESIGNER: LEONEL SOLIS
EMAIL: LEONEL@GMAIL.COM

JUAN MANUEL DIARTE
DETACH ADDITIONAL DWELLING UNIT
1523 E 14th St. NATIONAL CITY CA 91950
APN: 557-342-09-00
UTILITY: SDG&E
AJH: NATIONAL CITY

NEW ADDITION FLOOR PLAN

REVISION		
0	-	02/14/22

PROJECT NO.
P013
SHEET NO.
A-2

NOTE:
1. AS A CONDITION OF APPROVAL FOR THE ADU A DEED RESTRICTION SHALL BE RECORDED WITH THE COUNTY, WHICH SHALL RUN WITH THE LAND, AND INCLUDE LANGUAGE IN CONFORMANCE WITH SECTION 18.30.380.G.8 OF THE NCMC.

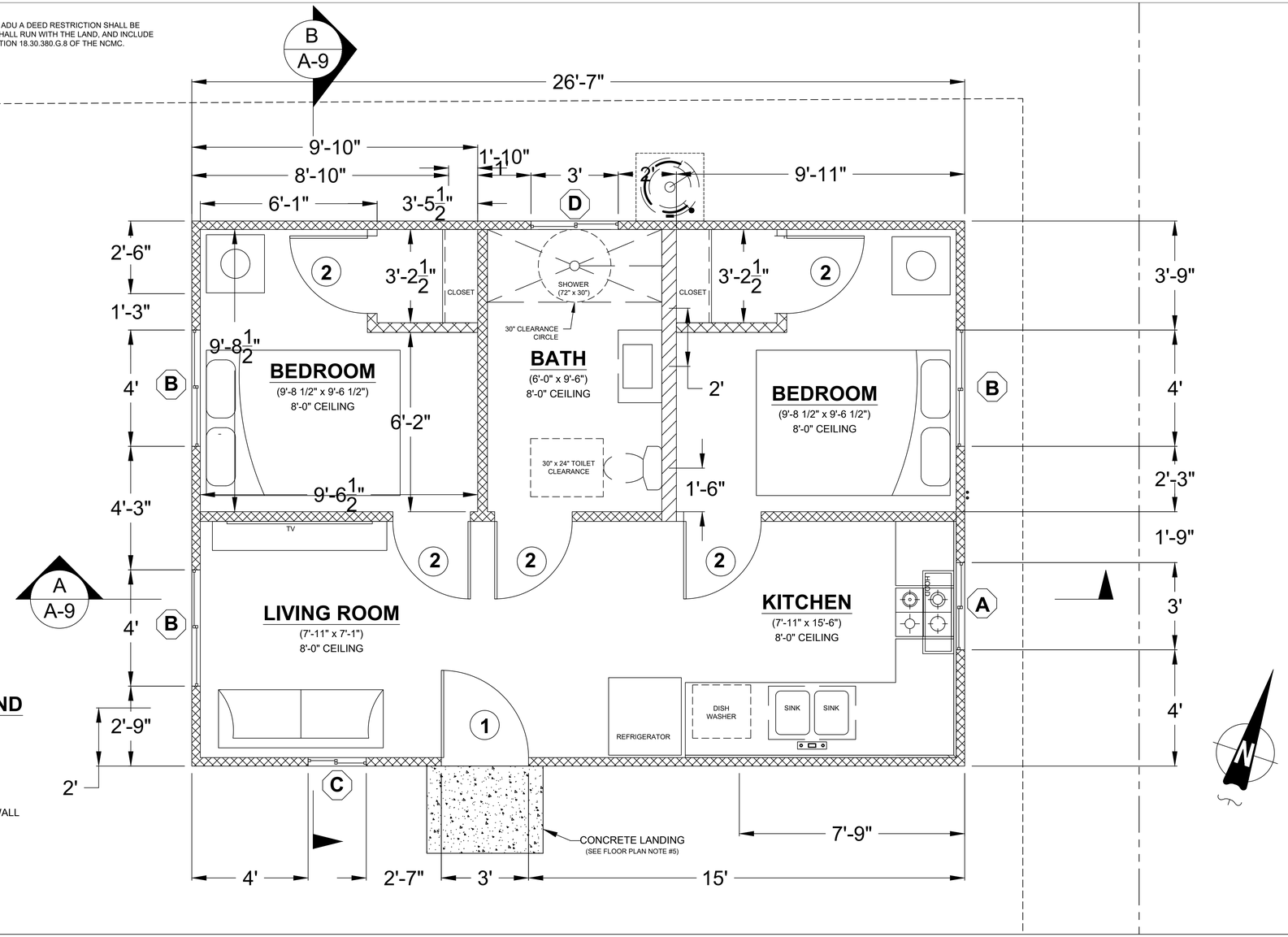

WALL LEGEND

- 2x6 WALL
- 2x4 WALL
- 2x4 PONY WALL

FLOOR PLAN
1/2" = 1'-0"

FLOOR PLAN NOTES

1. EXTERIOR WALLS WITHIN 3 FEET OF PROPERTY LINE (SPRINKLERS) OR 5 FEET OF PROPERTY LINE (WITHOUT SPRINKLERS) REQUIRE 1-HOUR FIRE RATING FOR EXPOSURE TO BOTH SIDES

2. PROJECTIONS:
   - PROHIBITED WITHIN 2 FEET OF PROPERTY LINE
   - 1-HOUR FIRE RATING ON THE UNDERSIDE WITHIN 3FT OF PROPERTY LINE (SPRINKLERS)
   - 1-HOUR FIRE RATING ON THE UNDERSIDE WITHIN 5FT OF PROPERTY LINE (WITHOUT SPRINKLERS)

3. OPENINGS:
   - PROHIBITED WITHIN 3FT OF PROPERTY LINE
   - MAXIMUM 25% OF WALL AREA WITHIN 5 FEET OF PROPERTY LINE (WITHOUT SPRINKLERS)

4. PENETRATIONS:
   - 1-HOUR FIRE-RATED PENETRATIONS OF WALLS WITHIN 3FT OF PROPERTY LINE (SPRINKLERS)
   - 1-HOUR FIRE-RATED PENETRATIONS OF WALLS WITHIN 5FT OF PROPERTY LINE (WITHOUT SPRINKLERS)

5. CONCRETE LANDING WITH MIN 36" DEPTH AND A MAXIMUM OF 1-1/2" LOWER THAN TOP OF DOOR THRESHOLD

OPTIONAL ROLL-IN SHOWER PLAN NOTES

1. SHOWER COMPARTMENT SEAT
   - MUST BE FOLDING TYPE, NOT TO EXCEED MORE THAN 6 INCHES FROM MOUNTING WALL WHEN FOLDED
   - LOCATED WITHIN 27 INCHES OF SHOWER CONTROLS
   - MOUNTED MINIMUM 17 INCHES AND MAXIMUM 19 INCHES ABOVE BATHROOM FINISHED FLOOR.
   - SEAT INSTALLED ON SIDE WALL ADJACENT TO CONTROLS AND EXTENDING FROM BACK WALL TO POINT WITHIN 3 INCHES OF SHOWER COMPARTMENT ENTRY
   - STRUCTURAL ADEQUACY OF MOUNTING HARDWARE AND FASTENERS TO ACCOMMODATE 250 POUND POINT LOAD APPLIED AT ANY POINT ON THE GRAB BAR, FASTENER, MOUNTING DEVICE, OR SUPPORTING STRUCTURE

2. SHOWER GRAB BARS
   - MOUNTED MINIMUM 33 INCHES AND MAXIMUM 36 INCHES ABOVE SHOWER FLOOR
   - NOT EXTENDING OVER SHOWER SEAT
   - IF CROSS SECTION IS CIRCULAR, MINIMUM 1-1/4" AND MAXIMUM 2" OUTSIDE DIAMETER
   - IF CROSS SECTION IS NON-CIRCULAR, MINIMUM 4" AND MAXIMUM 4.8" PERIMETER AND MAXIMUM 2-1/4" CROSS SECTION DIMENSION
   - GRAB BARS MOUNTED ADJACENT TO A WALL, 1-1/2" ABSOLUTE SPACE BETWEEN WALL AND GRAB BAR
   - MINIMUM 1-1/2" SPACE BETWEEN GRAB BAR AND PROJECTING OBJECTS BELOW AND AT ENDS
   - MINIMUM 12 INCH SPACE BETWEEN GRAB BAR AND PROJECTING OBJECTS ABOVE
   - SURFACE MATERIAL OF ANY WALLS OR OBJECTS ADJACENT TO GRAB BARS MUST BE FREE OF SHARP OR ABRASIVE ELEMENTS AND HAVE ROUNDED EDGES.
   - STRUCTURAL ADEQUACY OF MOUNTING HARDWARE AND FASTENERS TO ACCOMMODATE 250 POUND POINT LOAD APPLIED AT ANY POINT ON THE GRAB BAR, FASTENER, MOUNTING DEVICE, OR SUPPORTING STRUCTURE
   - WALL REINFORCEMENT TO BE PROVIDED AT LOCATION OF GRAB BARS (E.G. BLOCKING)

3. OPERABLE PARTS OF SHOWER CONTROLS AND FAUCETS:
   - INSTALLED ON BACK WALL OF SHOWER COMPARTMENT ADJACENT TO SEAT WALL.
   - LOCATED MINIMUM 19 INCHES AND MAXIMUM 27 INCHES FROM SEAT WALL
   - LOCATED ABOVE GRAB BAR BUT NO HIGHER THAN 48 INCHES ABOVE SHOWER FLOOR
   - CENTERLINE AT MINIMUM 39 INCHES AND MAXIMUM 41 INCHES ABOVE SHOWER FLOOR
   - SINGLE-LEVER DESIGN
   - OPERABLE WITH MAXIMUM 5 POUNDS OF FORCE
   - OPERABLE WITH ONE HAND AND WITHOUT TIGHT GRASPING, PINCHING, OR TWISTING OF WRIST

4. SPRAYER UNIT AND ASSOCIATED OPERABLE PARTS SHALL BE PROVIDED PER THE FOLLOWING:
   - OPERABLE PARTS, INCLUDING HANDLE, TO BE INSTALLED ON BACK WALL OF SHOWER COMPARTMENT MINIMUM 19 INCHES AND MAXIMUM 27 INCHES FROM SEAT WALL
   - OPERABLE PARTS LOCATED ABOVE GRAB BAR BUT NO HIGHER THAN 48 INCHES ABOVE SHOWER FLOOR, MEASURED TO TOP OF MOUNTING BRACKET
   - MINIMUM 59 INCH LONG HOSE
   - CAPABLE FOR USE AS FIXED SHOWER HEAD AND HAND HELD SHOWER
   - ON/OFF CONTROL WITH NON-POSITIVE SHUT OFF
   - ADJUSTABLE -HEIGHT SHOWER HEADS ON VERTICAL BAR SHALL NOT OBSTRUCT USE OF BATHTUB GRAB BARS

5. WHERE SOAP DISHES ARE PROVIDED, MAXIMUM 40 INCHES ABOVE SHOWER FLOOR AND WITHIN REACH LIMITS FROM THE SHOWER SEAT

6. MAXIMUM 2.1% SLOPE IN ALL DIRECTIONS OF ROLL-IN SHOWER FLOORS

7. MAXIMUM $\frac{1}{2}$" HIGH THRESHOLDS WITH MAXIMUM 50% BEVELED SLOPE AT ROLL-IN SHOWERS

8. WHERE DRAINS ARE PROVIDED AT ROLL-IN SHOWERS, MAXIMUM $\frac{1}{2}$" GRATE OPENINGS FLUSH WITH SHOWER FLOOR SURFACE

WINDOW SCHEDULE

MARK	DIMENSION	TYPE	TEMPERED	NOTES
A	3'-0" x 4'-0"	SLIDING		
B	4'-0" x 4'-0"	SLIDING		
C	2'-0" x 3'-0"	SLIDING	Y	
D	3'-0" x 2'-0"	SLIDING	Y	

EXTERIOR WINDOWS, EXTERIOR GLAZED DOORS, GLAZED OPENINGS WITHIN EXTERIOR DOORS, GLAZED OPENINGS WITHIN EXTERIOR GARAGE DOORS, AND EXTERIOR STRUCTURAL GLASS VENEER SHALL COMPLY WITH ONE OF THE FOLLOWING: (SELECT ONE)

A. MULTI-PANE GLAZING WITH A MINIMUM OF ONE TEMPERED PANE MEETING THE REQUIREMENTS OF SECTION 2406 SAFETY GLAZING, AND WHERE ANY GLAZING FRAMES MADE OF VINYL MATERIALS SHALL HAVE WELDED CORNERS, METAL REINFORCEMENT IN INTERLOCK AREA, AND BE CERTIFIED TO AAMA/WDMA/CSA 101/I.S.2/A40
B. MINIMUM 20-MIN FIRE-RESISTANCE-RATED.
C. MEET PERFORMANCE REQUIREMENTS OF SFM STANDARD 12-7A-2

DOOR SCHEDULE

MARK	DIMENSION	TYPE	TEMPERED	NOTES
1	3'-0" x 6'-8"	SWINGING		1-3/8" SOLID CORE
2	2'-8" x 6'-8"	SWINGING		
3	8'-0" x 6'-8"	SLIDING		6FT CLOSET

EXTERIOR DOORS SHALL COMPLY WITH ONE OF THE FOLLOWING: (SELECT ONE)

A. EXTERIOR SURFACE OR CLADDING OF NON-COMBUSTIBLE OR IGNITION-RESISTANT MATERIAL
B. SOLID CORE WOOD COMPLYING WITH THE FOLLOWING:
   - STILES AND RAILS MINIMUM 1-3/8 INCHES THICK
   - RAISED PANELS MINIMUM 1-1/4 INCHES THICK
     EXCEPTION: EXTERIOR PERIMETER OF RAISED PANEL MAY TAPER TO A TONGUE MINIMUM 3/8 INCHES THICK
C. MINIMUM 20-MIN FIRE RATED WHEN TESTED PER NFPA 252
D. MEET PERFORMANCE REQUIREMENTS OF SFM STANDARD 12-7A-1

AZTEC DRAFTING & DESIGN
9119 JAMACHA RD, SUITE 115
SPRING VALLEY, CA 91977
CELL: 619-414-8506

DRAWINGS PROVIDED BY:
AZTEC DRAFTING & DESIGN
DESIGNER: LEONEL SOLIS
EMAIL: LEONEL@GMAIL.COM

JUAN MANUEL DIARTE
DETACH ADDITIONAL DWELLING UNIT
1523 E 14th St. NATIONAL CITY CA 91950
APN: 557-342-09-00
UTILITY: SDG&E
AJH: NATIONAL CITY

ADU FLOOR PLAN

REVISION		
0	-	02/14/22

PROJECT NO.
P013
SHEET NO.
A-3

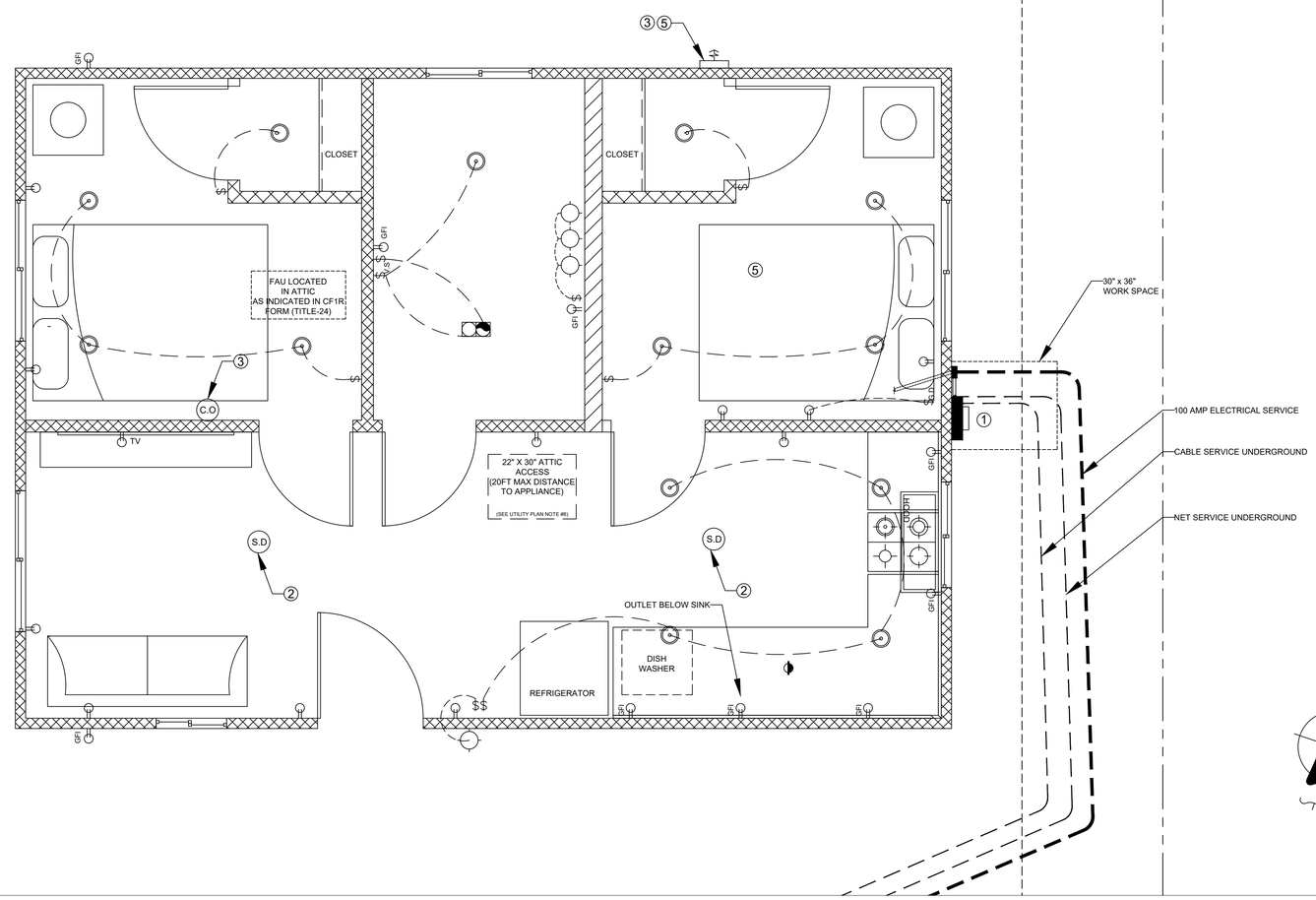

WALL LEGEND

- 2x6 WALL
- 2x4 WALL
- 2x4 PONY WALL

ELECTRICAL PLAN
1/2" = 1'-0"

ELECTRICAL LEGEND

	DUPLEX OUTLET		HIGH EFFICACY RECESSED LIGHT
$	WALL SWITCH		GARBAGE DISPOSAL
$G.D	GARBAGE DISPOSAL SWITCH		
$V.S	VACANCY SENSOR		
	4" DIA DRYER VENT		
S.D	SMOKE DETECTOR		FAN & LIGHT COMBO
C.O	CARBON MONOXIDE ALARM		
	EXHAUST FAN AND LIGHT COMBINATION		
	HIGH EFFICACY LIGHT FIXTURE		

ELECTRICAL NOTES

1. KITCHENS REQUIRE EXHAUST FANS WITH A MINIMUM 100 CFM DUCTED TO THE EXTERIOR. DETAIL COMPLIANCE BY INCLUDING A COMPLYING EXHAUST FAN OR A DUCTED RANGE HOOD TO THE EXTERIOR.
2. 3"X3"X0.229" PLATE WASHERS SHALL BE USED ON EACH SILL PLATE ANCHOR BOLT
3. FOR STANDARD CUT WASHERS PLACED BETWEEN PLATE WASHER AND NUT, HOLE IN PLATE WASHER MAY BE DIAGONALLY SLOTTED WITH MAXIMUM 3/16" LARGER WIDTH THAN BOLT DIAMETER AND MAXIMUM 1-3/4" SLOT LENGTH
4. PROVIDE A MINIMUM OF TWO ANCHOR BOLTS PER SILL PLATE WITH ONE BOLT LOCATED MAXIMUM 12" AND MINIMUM 7 BOLT DIAMETERS FROM EACH END OF EACH SECTION.
5. BOLTS LOCATED IN THE MIDDLE THIRD OF THE SILL PLATE WIDTH
6. FASTENERS FOR PRESSURE-PRESERVATIVE TREATED AND FIRE RETARDANT TREATED WOOD SHALL BE HOT-DIPPED ZINC COATED GALVANIZED, STAINLESS STEEL OR COPPER
7. NO LPG PIPING ASSEMBLIES ALLOWED IN OR BENEATH SLABS WITHIN THE STRUCTURE
8. ELECTRICAL RECEPTACLES SHALL BE LISTED TAMPER-RESISTANT. (CEC 406.12)
9. AT LEAST ONE 120 VOLT, 20-AMP BRANCH SHALL BE PROVIDED TO SUPPLY BATHROOM RECEPTACLE OUTLETS.
10. ARC FAULT CIRCUIT INTERRUPTER PROTECTION FOR ALL OUTLETS.

UTILITY PLAN NOTES

1. LOCAL EXHAUST FANS TO EXTERIOR TO PROVIDE MINIMUM 50 CFM INTERMITTENT OR 20 CFM CONTINUOUS VENTILATION.
2. SMOKE DETECTORS TO BE INTERCONNECTED PER CRC R314.4 AND HARD-WIRED WITH BATTERY BACK-UP PER CRC R314.6
3. CARBON MONOXIDE ALARMS TO BE INTERCONNECTED PER CRC R315.7 AND HARD-WIRED WITH BATTERY BACK-UP PER CRC R315.5
4. 4" Ø DRYER VENT WITH MAXIMUM 14 FOOT COMBINED HORIZONTAL AND VERTICAL LENGTH WITH TWO 90 DEGREE ELBOWS.
5. A MECHANICAL EXHAUST VENTILATION SYSTEM, SUPPLY VENTILATION SYSTEM, OR COMBINATION THEREOF SHALL BE INSTALLED FOR EACH DWELLING UNIT TO PROVIDE WHOLE-BUILDING VENTILATION WITH OUTDOOR AIR IN COMPLIANCE WITH ASHRAE STANDARD 62.2 AS ADOPTED BY THE CALIFORNIA ENERGY COMMISSION.
6. AN INTERMITTENTLY OR CONTINUOUSLY OPERATING LOCAL MECHANICAL EXHAUST VENTILATION SYSTEM SHALL BE INSTALLED IN EACH BATHROOM WITH A BATHTUB, SHOWER, OR SIMILAR MOISTURE SOURCE AND IN EACH KITCHEN IN COMPLIANCE WITH ASHRAE STANDARD 62.2 AS ADOPTED BY THE CALIFORNIA ENERGY COMMISSION. INTERMITTENT LOCAL EXHAUST VENTILATION AIRFLOW RATES SHALL BE 50 CFM IN BATHROOMS AND 100 CFM IN KITCHENS. CONTINUOUS LOCAL EXHAUST VENTILATION AIRFLOW RATES SHALL BE 20 CFM IN BATHROOMS AND 5 AIR CHANGES PER HOUR IN KITCHENS BASED ON KITCHEN VOLUME.
7. WATER HEATER OR FURNACE SHALL BE A DIRECT-VENT APPLIANCE
8. LISTED GASKETED SELF CLOSING DOOR REQUIRED FOR GAS FAU
9. MINIMUM 3' CLEARANCES FROM NEW BATHROOM AND KITCHEN RANGE HOOD EXHAUST TERMINATION TO ANY BUILDING OPENING AND PROPERTY LINE.
10. EXHAUST DUCTS AND DRYER VENTS SHALL BE EQUIPPED WITH BACK-DRAFT DAMPERS PER SEC. 504.1.1 CMC.

LIGHTING PLAN NOTES

1. ALL LUMINAIRES SHALL BE HIGH-EFFICACY IN ACCORDANCE WITH CBEES TABLE 150.0-A
2. ALL LED LUMINAIRES AND LAMPS SHALL BE MARKED "JA8-2016" AND LISTED IN THE CALIFORNIA ENERGY COMMISSION DATABASE AT HTTPS://CACERTAPPLIANCES. ENERGY.CA.GOV/PAGES/ APPLIANCESEARCH.ASPX
3. ALL RECESSED DOWNLIGHT AND ENCLOSED LUMINAIRES SHALL BE MARKED "JA8-2016-E" AND LISTED IN THE CALIFORNIA ENERGY COMMISSION DATABSE AT HTTPS://CACERTAPPLIANCES.ENERGY.CA.GOV/PAGES/ APPLIANCESEARCH.ASPX
4. RECESSED DOWNLIGHT LUMINAIRES IN CEILINGS SHALL NOT BE SCREW-BASED
5. BATHROOMS, GARAGES, LAUNDRY ROOMS, AND UTILITY ROOMS: AT LEAST ONE LUMINAIRE IN EACH SPACE SHALL BE CONTROLLED BY A VACANCY SENSOR
6. ALL LUMINAIRES REQUIRING "JA8-2016" OR "JA8-2016-E" MARKING SHALL BE CONTROLLED BY A DIMMER OR VACANCY SENSOR
   EXCEPTION: CLOSETS LESS THAN 70 S.F. & HALLWAYS
7. OUTDOOR LIGHTING PERMANENTLY MOUNTED TO BUILDINGS SHALL BE CONTROLLED BY ONE OF THE FOLLOWING:
   - PHOTOCONTROL AND MOTION SENSOR
   - PHOTOCONTROL AND AUTOMATIC TIME-SWITCH CONTROL
   - ASTRONOMICAL TIME CLOCK
   - ENERGY MANAGEMENT CONTROL SYSTEM PER CBEES 150.0(K)3AIIIC

SOLAR READY KEY NOTES

1. THE MAIN ELECTRICAL SERVICE PANEL SHALL NOT BE OF A TYPE WITH A CENTER-FED MAIN CIRCUIT BREAKER AND SHALL INCLUDE RESERVED SPACE ALLOWING FOR INSTALLATION OF DOUBLE-POLE CIRCUIT BREAKERS FOR A FUTURE SOLAR PHOTOVOLTAIC SYSTEM. SUCH RESERVED SPACE SHALL BE POSITIONED AT THE OPPOSITE (LOAD) END FROM THE INPUT FEEDER OR MAIN CIRCUIT BREAKER LOCATION. THE RESERVED SPACE SHALL BE PERMANENTLY AND VISIBLY MARKED AS "FOR FUTURE SOLAR PHOTOVOLTAIC"
2. APPROVED MINIMUM 4-INCH SQUARE ELECTRICAL JUNCTION BOX LOCATED WITHIN 72 INCHES HORIZONTALLY AND 12 INCHES VERTICAL OF MAIN ELECTRICAL SERVICE PANEL
3. MINIMUM 1 INCH DIAMETER LISTED ELECTRICAL METALLIC RACEWAY ORIGINATING AT READILY ACCESSIBLE ATTIC LOCATION WITH PROXIMITY TO SOLAR ZONE AREA AND TERMINATING AT THE REQUIRED ELECTRICAL JUNCTION BOX
4. MINIMUM 1 INCH DIAMETER LISTED ELECTRICAL METALLIC RACEWAY ORIGINATING AT THE REQUIRED ELECTRICAL JUNCTION BOX AND TERMINATING AT THE MAIN ELECTRICAL SERVICE PANEL
5. ELECTRICAL JUNCTION BOX AND SEGMENT OF METALLIC RACEWAY IN THE ATTIC SHALL BE PERMANENTLY AND VISIBLY MARKED AS "FOR FUTURE SOLAR PHOTOVOLTAIC"

AZTEC DRAFTING & DESIGN
9119 JAMACHA RD, SUITE 115
SPRING VALLEY, CA 91977
CELL: 619-414-8506

DRAWINGS PROVIDED BY:
AZTEC DRAFTING & DESIGN
DESIGNER: LEONEL SOLIS
EMAIL: LEONEL@GMAIL.COM

JUAN MANUEL DIARTE
DETACH ADDITIONAL DWELLING UNIT
1523 E 14th St. NATIONAL CITY CA 91950
APN: 557-342-09-00
UTILITY: SDG&E
AJH: NATIONAL CITY

ADU ELECTRICAL PLAN

REVISION		
0	-	02/14/22

PROJECT NO.
P013

SHEET NO.
A-4

NOTE:
1. CLEARLY VISIBLE ADDRESS NUMBER WITH 4" TALL LETTERS, WITH 4" TALL LETTERS, WITH A 1/2" MIN STROKE PER CRC R319.
2. STUCCO OF THE ADU AND ADDITION WILL MATCH THE COLOR OF THE MAIN RESIDENCE.

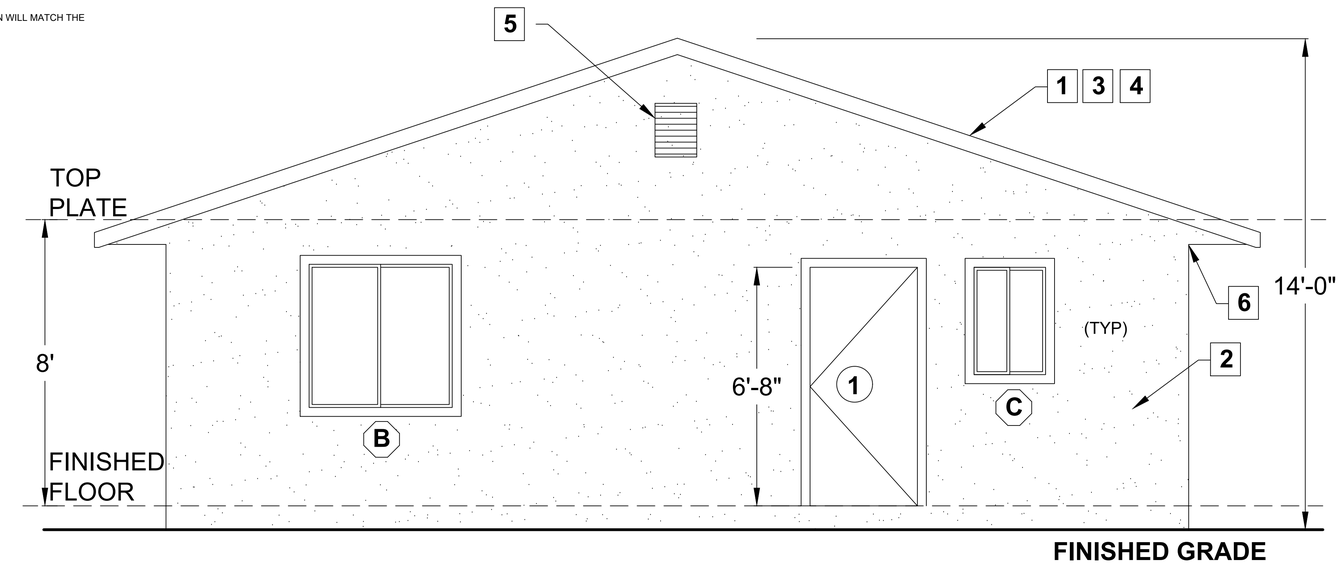

FRONT

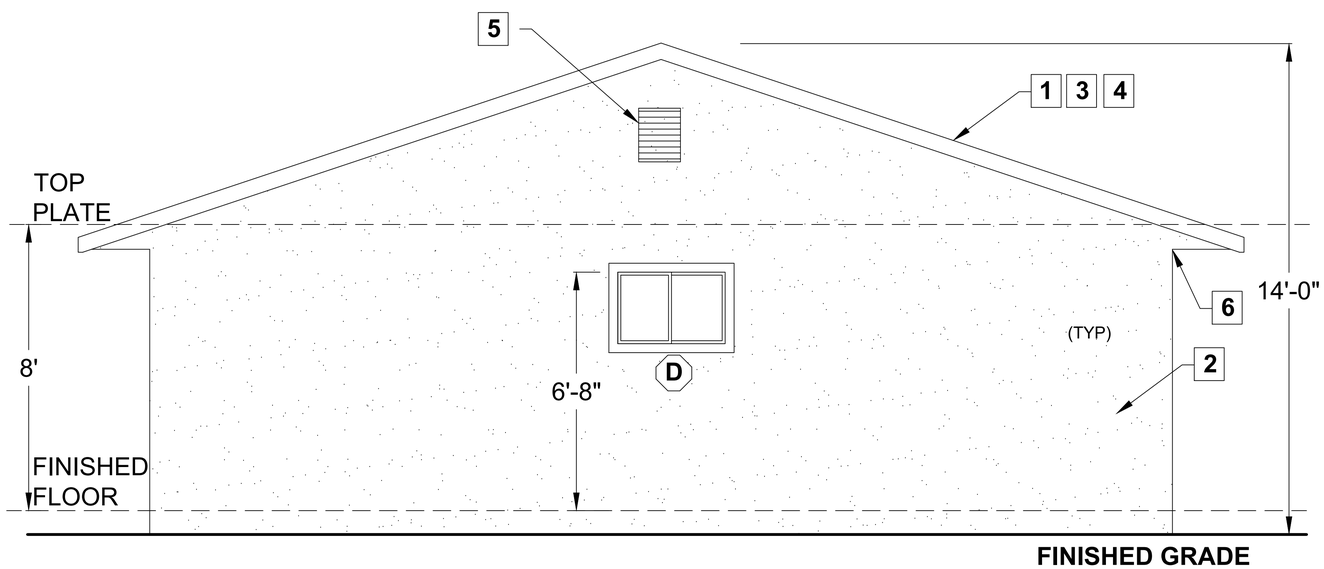

BACK

ELEVATIONS
1/2" = 1'-0"

ELEVATION KEY NOTES

1. ROOF: CLASS 'A' FIRE RATING -
   ROOF MATERIAL: OWENS CORNING ASPHALT SHINGLES FIRE RATING CLASS A,
   UNDERLAYMENT: OWENS CORNING ProArmor SYNTHETIC ROOFING UNDERLAYMENT.
   LISTING REPORT #: PROA21
2. EXTERIOR WALL FINISH: STUCCO PAINTED TO MATCH EXISTING
3. ROOF PITCH: 4:12
4. RADIANT BARRIER IS REQUIRED
5. GABLE VENT (SEE NOTE 5 & 6 BELOW)
   MANUFACTURER: GIBRALTAR BUILDING PRODUCTS
   MODEL: GLFF1418WH-0.125
   NFVA: 110sqin (71 in^2)
6. EAVE VENT (SEE NOTE 5 & 6 BELOW)
   A: MANUFACTURER: GIBRALTAR BUILDING PRODUCTS
   B: GALV. STEEL 2-WAY REVERSIBLE VENT
   C: 71sqin (MIN 23 in^2)

WILDFIRE ZONE PLAN NOTES

1. IN ROOF COVERINGS WHERE THE PROFILE CREATES SPACE BETWEEN THE ROOF COVERING AND COMBUSTIBLE ROOF DECKING, SPECIFY ONE OF THE FOLLOWING MEANS OF PROTECTING SPACES AT EAVES ENDS.
   a. FIRE-STOPPING WITH APPROVED MATERIALS
   b. ONE LAYER OF 72 POUND (32.4 KG) MINERAL-SURFACED NON-PERFORATED CAP SHEET COMPLYING WITH ASTM D 3909 INSTALLED OVER THE COMBUSTIBLE DECKING
   c. OTHERWISE CONSTRUCTED TO PREVENT INTRUSION OF FLAMES AND EMBERS
2. EXPOSED VALLEY FLASHINGS SHALL BE CONSTRUCTED WITH NOT LESS THAN 0.019-INCH (NO. 26 GALVANIZED SHEET GAGE) CORROSION-RESISTANT METAL INSTALLED OVER A MINIMUM 36-INCH-WIDE UNDERLAYMENT CONSISTING OF ONE LAYER OF NO. 72 ASTM CAP SHEET RUNNING THE FULL LENGTH OF THE VALLEY.
3. ANY ROOF GUTTERS SHALL BE PROVIDED WITH MEANS TO PREVENT ACCUMULATION OF LEAVES AND DEBRIS.
4. SKYLIGHTS SHALL BE TEMPERED GLASS.
5. ALL VENTS (ROOF, FOUNDATION, COMBUSTION-AIR, ETC) SHALL RESIST THE INTRUSION OF FLAMES AND EMBERS
6. VENTILATION OPENINGS FOR ENCLOSED ATTICS, EAVE SOFFIT SPACES, ENCLOSED RAFTER SPACES FORMED WHERE CEILINGS ARE APPLIED DIRECTLY TO THE UNDERSIDE OF ROOF RAFTERS, UNDERFLOOR VENTILATION OPENINGS, AND VENT OPENINGS IN EXTERIOR WALLS AND EXTERIOR DOORS SHALL BE LISTED TO ASTM E 2886 AND COMPLY WITH ALL OF THE FOLLOWING:
   a. THERE SHALL BE NO FLAMING IGNITION OF THE COTTON MATERIAL DURING THE EMBER INTRUSION TEST
   b. THERE SHALL BE NO FLAMING IGNITION DURING THE INTEGRITY TEST PORTION OF THE FLAME INTRUSION TEST
   c. THE MAXIMUM TEMPERATURE OF THE UNEXPOSED SIDE OF THE VENT SHALL NOT EXCEED 662 DEGREES FAHRENHEIT (350 DEGREES CELSIUS)
7. EXTERIOR WALL FINISH SHALL COMPLY WITH ONE OF THE FOLLOWING:
   a. NON-COMBUSTIBLE MATERIAL (STUCCO, CEMENT FIBER BOARD, ETC)
      - STUCCO AND CEMENT PLASTER USED AS AN EXTERIOR WALL COVERING SHALL BE 7/8-INCH THICK
      - NONCOMBUSTIBLE OR FIRE-RETARDANT-TREATED WOOD SHAKE USED AS AN EXTERIOR WALL COVERING SHALL HAVE AN UNDERLAYMENT OF MINIMUM 1/2-INCH FIRE-RATED GYPSUM SHEATHING THAT IS TIGHTLY BUTTED, OR TAPED AND MUDDED, OR AN UNDERLAYMENT OF OTHER IGNITION-RESISTANT MATERIAL APPROVED BY THE BUILDING OFFICIAL.
   b. IGNITION-RESISTANT MATERIAL
8. PATIO COVER, CARPORT AND TRELLIS CONSTRUCTION WITH ALL EXPOSED ELEMENTS SHALL COMPLY WITH ANY OF THE FOLLOWING:
   - NON-COMBUSTIBLE MATERIAL
   - 1-HOUR FIRE-RESISTANT-RATED MATERIAL
   - APPROVED EXTERIOR FIRE-RETARDANT TREATED WOOD
   - MODIFIED HEAVY TIMBER (MIN 2X TONGUE-AND-GROOVE SHEATHING, 4X6 RAFTERS/BEAMS, 6X6 POSTS)
9. DECK, BALCONY, AND EXTERIOR STAIR CONSTRUCTION, WITH ALL EXPOSED ELEMENTS SHALL COMPLY WITH THE FOLLOWING:
   a. FRAMING
      - NON-COMBUSTIBLE MATERIAL
      - 1-HOUR FIRE-RESISTANT-RATED MATERIAL
      - APPROVED EXTERIOR FIRE-RETARDANT TREATED WOOD
      - MODIFIED HEAVY TIMBER (MIN 4X8 JOISTS, 4X10 OR 6X8 BEAMS, 6X6 POSTS)
   b. DECKING AND TREAD MATERIAL (ANY OF THE FOLLOWING):
      - NON-COMBUSTIBLE MATERIAL
      - 1-HOUR FIRE-RESISTANT-RATED MATERIAL
      - APPROVED EXTERIOR FIRE-RETARDANT TREATED WOOD
      - APPROVED ALTERNATIVE DECKING MATERIAL MEETING TESTS REQUIREMENTS OF COUNTY BUILDING CODE 92.1.709A.1.4)
10. EXTERIOR GARAGE DOORS SHALL RESIST THE INTRUSION OF EMBERS INTO THE GARAGE BY LIMITING THE SIZE OF ANY GAPS AT THE BOTTOM, SIDES, AND TOP OF THE DOOR TO 1/8 INCH OR LESS USING ONE OF THE FOLLOWING METHODS
    a. WEATHER-STRIPPING PRODUCTS WITH TENSILE STRENGTH AND FLAMMABILITY RATING PER CBC 708A.4
    b. DOOR OVERLAPS ONTO JAMBS AND HEADERS
    c. GARAGE DOOR JAMBS AND HEADERS COVERED WITH METAL FLASHING
11. PAPER-FACED INSULATION PROHIBITED IN ATTICS OR OTHER VENTILATED SPACES.
12. FENCES OR ANY STRUCTURE WITHIN 5 FEET OF BUILDING SHALL BE CONSTRUCTED PER ONE OF THE FOLLOWING:
    a. NON-COMBUSTIBLE MATERIAL
    b. APPROVED EXTERIOR FIRE-RETARDANT TREATED WOOD
    c. MATERIAL MEETING SAME FIRE-RESISTIVE STANDARDS AS EXTERIOR WALLS OF BUILDINGS

AZTEC DRAFTING & DESIGN
9119 JAMACHA RD, SUITE 115
SPRING VALLEY, CA 91977
CELL: 619-414-8506

DRAWINGS PROVIDED BY:
AZTEC DRAFTING & DESIGN
DESIGNER: LEONEL SOLIS
EMAIL: LEONSOLIS@GMAIL.COM

JUAN MANUEL DIARTE
DETACH ADDITIONAL DWELLING UNIT
1523 E 14th St. NATIONAL CITY CA 91950
APN: 557-342-09-00
UTILITY: SDG&E
AJH: NATIONAL CITY

ADU ELEVATIONS

REVISION		
0	-	02/14/22

PROJECT NO.
P013
SHEET NO.
A-5

NOTE:
1. CLEARLY VISIBLE ADDRESS NUMBER WITH 4" TALL LETTERS, WITH 4" TALL LETTERS, WITH A 1/2" MIN STROKE PER CRC R319.
2. STUCCO OF THE ADU AND ADDITION WILL MATCH THE COLOR OF THE MAIN RESIDENCE.

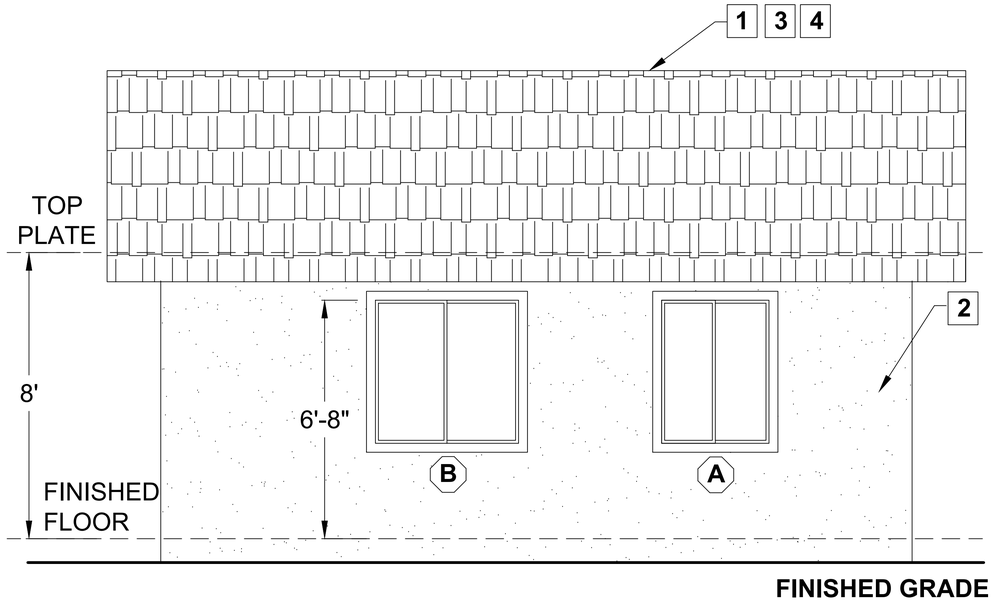

RIGHT

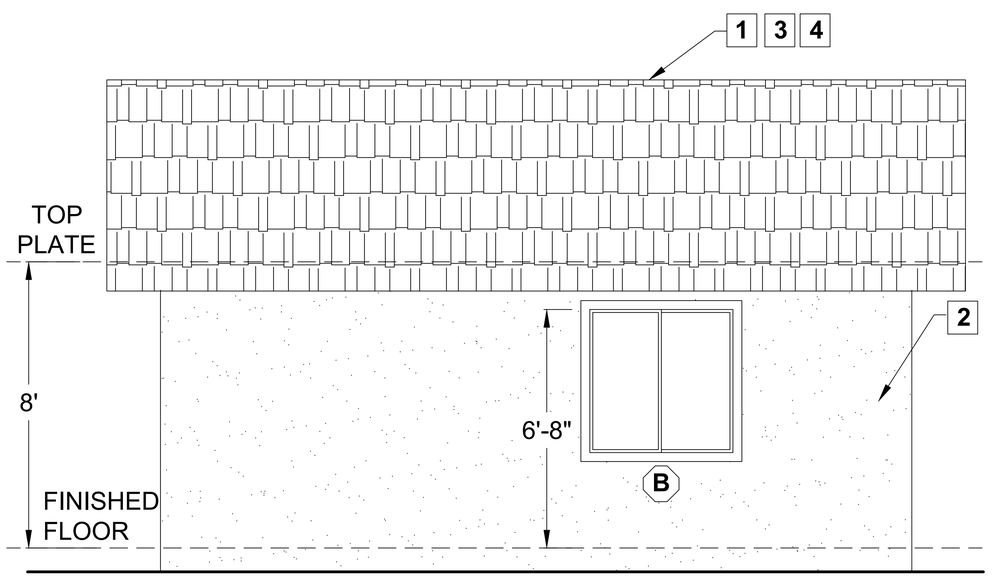

LEFT

ELEVATIONS
1/2" = 1'-0"

ELEVATION KEY NOTES

SEE SHEET A3 FOR KEY NOTES

WILDFIRE ZONE PLAN NOTES

1. IN ROOF COVERINGS WHERE THE PROFILE CREATES SPACE BETWEEN THE ROOF COVERING AND COMBUSTIBLE ROOF DECKING, SPECIFY ONE OF THE FOLLOWING MEANS OF PROTECTING SPACES AT EAVES ENDS.
   a. FIRE-STOPPING WITH APPROVED MATERIALS
   b. ONE LAYER OF 72 POUND (32.4 KG) MINERAL-SURFACED NON-PERFORATED CAP SHEET COMPLYING WITH ASTM D 3909 INSTALLED OVER THE COMBUSTIBLE DECKING
   c. OTHERWISE CONSTRUCTED TO PREVENT INTRUSION OF FLAMES AND EMBERS
2. EXPOSED VALLEY FLASHINGS SHALL BE CONSTRUCTED WITH NOT LESS THAN 0.019-INCH (NO. 26 GALVANIZED SHEET GAGE) CORROSION-RESISTANT METAL INSTALLED OVER A MINIMUM 36-INCH-WIDE UNDERLAYMENT CONSISTING OF ONE LAYER OF NO. 72 ASTM CAP SHEET RUNNING THE FULL LENGTH OF THE VALLEY.
3. ANY ROOF GUTTERS SHALL BE PROVIDED WITH MEANS TO PREVENT ACCUMULATION OF LEAVES AND DEBRIS.
4. SKYLIGHTS SHALL BE TEMPERED GLASS.
5. ALL VENTS (ROOF, FOUNDATION, COMBUSTION-AIR, ETC) SHALL RESIST THE INTRUSION OF FLAMES AND EMBERS
6. VENTILATION OPENINGS FOR ENCLOSED ATTICS, EAVE SOFFIT SPACES, ENCLOSED RAFTER SPACES FORMED WHERE CEILINGS ARE APPLIED DIRECTLY TO THE UNDERSIDE OF ROOF RAFTERS, UNDERFLOOR VENTILATION OPENINGS, AND VENT OPENINGS IN EXTERIOR WALLS AND EXTERIOR DOORS SHALL BE LISTED TO ASTM E 2886 AND COMPLY WITH ALL OF THE FOLLOWING:
   a. THERE SHALL BE NO FLAMING IGNITION OF THE COTTON MATERIAL DURING THE EMBER INTRUSION TEST
   b. THERE SHALL BE NO FLAMING IGNITION DURING THE INTEGRITY TEST PORTION OF THE FLAME INTRUSION TEST
   c. THE MAXIMUM TEMPERATURE OF THE UNEXPOSED SIDE OF THE VENT SHALL NOT EXCEED 662 DEGREES FAHRENHEIT (350 DEGREES CELSIUS)
7. EXTERIOR WALL FINISH SHALL COMPLY WITH ONE OF THE FOLLOWING:
   a. NON-COMBUSTIBLE MATERIAL (STUCCO, CEMENT FIBER BOARD, ETC)
      - STUCCO AND CEMENT PLASTER USED AS AN EXTERIOR WALL COVERING SHALL BE 7/8-INCH THICK
      - NONCOMBUSTIBLE OR FIRE-RETARDANT-TREATED WOOD SHAKE USED AS AN EXTERIOR WALL COVERING SHALL HAVE AN UNDERLAYMENT OF MINIMUM 1/2-INCH FIRE-RATED GYPSUM SHEATHING THAT IS TIGHTLY BUTTED, OR TAPED AND MUDDED, OR AN UNDERLAYMENT OF OTHER IGNITION-RESISTANT MATERIAL APPROVED BY THE BUILDING OFFICIAL.
   b. IGNITION-RESISTANT MATERIAL
8. PATIO COVER, CARPORT AND TRELLIS CONSTRUCTION WITH ALL EXPOSED ELEMENTS SHALL COMPLY WITH ANY OF THE FOLLOWING:
   - NON-COMBUSTIBLE MATERIAL
   - 1-HOUR FIRE-RESISTANT-RATED MATERIAL
   - APPROVED EXTERIOR FIRE-RETARDANT TREATED WOOD
   - MODIFIED HEAVY TIMBER (MIN 2X TONGUE-AND-GROOVE SHEATHING, 4X6 RAFTERS/BEAMS, 6X6 POSTS)
9. DECK, BALCONY, AND EXTERIOR STAIR CONSTRUCTION, WITH ALL EXPOSED ELEMENTS SHALL COMPLY WITH THE FOLLOWING:
   a. FRAMING
      - NON-COMBUSTIBLE MATERIAL
      - 1-HOUR FIRE-RESISTANT-RATED MATERIAL
      - APPROVED EXTERIOR FIRE-RETARDANT TREATED WOOD
      - MODIFIED HEAVY TIMBER (MIN 4X8 JOISTS, 4X10 OR 6X8 BEAMS, 6X6 POSTS)
   b. DECKING AND TREAD MATERIAL (ANY OF THE FOLLOWING):
      - NON-COMBUSTIBLE MATERIAL
      - 1-HOUR FIRE-RESISTANT-RATED MATERIAL
      - APPROVED EXTERIOR FIRE-RETARDANT TREATED WOOD
      - APPROVED ALTERNATIVE DECKING MATERIAL MEETING TESTS REQUIREMENTS OF COUNTY BUILDING CODE 92.1.709A.1.4)
10. EXTERIOR GARAGE DOORS SHALL RESIST THE INTRUSION OF EMBERS INTO THE GARAGE BY LIMITING THE SIZE OF ANY GAPS AT THE BOTTOM, SIDES, AND TOP OF THE DOOR TO 1/8 INCH OR LESS USING ONE OF THE FOLLOWING METHODS
    a. WEATHER-STRIPPING PRODUCTS WITH TENSILE STRENGTH AND FLAMMABILITY RATING PER CBC 708A.4
    b. DOOR OVERLAPS ONTO JAMBS AND HEADERS
    c. GARAGE DOOR JAMBS AND HEADERS COVERED WITH METAL FLASHING
11. PAPER-FACED INSULATION PROHIBITED IN ATTICS OR OTHER VENTILATED SPACES.
12. FENCES OR ANY STRUCTURE WITHIN 5 FEET OF BUILDING SHALL BE CONSTRUCTED PER ONE OF THE FOLLOWING:
    a. NON-COMBUSTIBLE MATERIAL
    b. APPROVED EXTERIOR FIRE-RETARDANT TREATED WOOD
    c. MATERIAL MEETING SAME FIRE-RESISTIVE STANDARDS AS EXTERIOR WALLS OF BUILDINGS

AZTEC DRAFTING & DESIGN
9119 JAMACHA RD, SUITE 115
SPRING VALLEY, CA 91977
CELL: 619-414-8506

DRAWINGS PROVIDED BY:
AZTEC DRAFTING & DESIGN
DESIGNER: LEONEL SOLIS
EMAIL: LEONELSOLIS@GMAIL.COM

JUAN MANUEL DIARTE
DETACH ADDITIONAL DWELLING UNIT
1523 E 14th St. NATIONAL CITY CA 91950
APN: 557-342-09-00
UTILITY: SDG&E
AJH: NATIONAL CITY

ADU ELEVATIONS

REVISION		
0	-	02/14/22

PROJECT NO.
P013

SHEET NO.
A-6

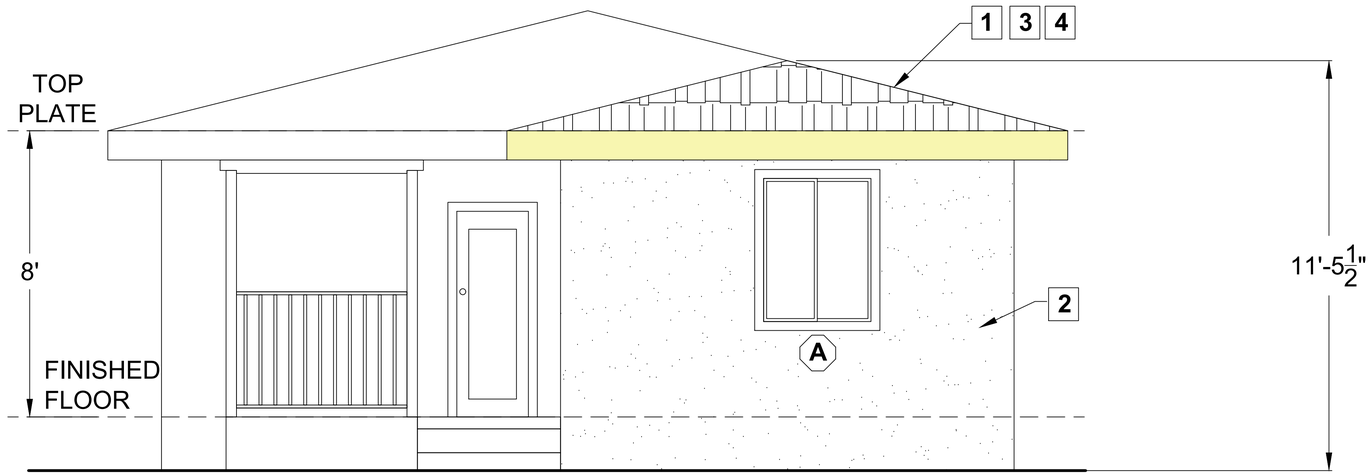

BACK

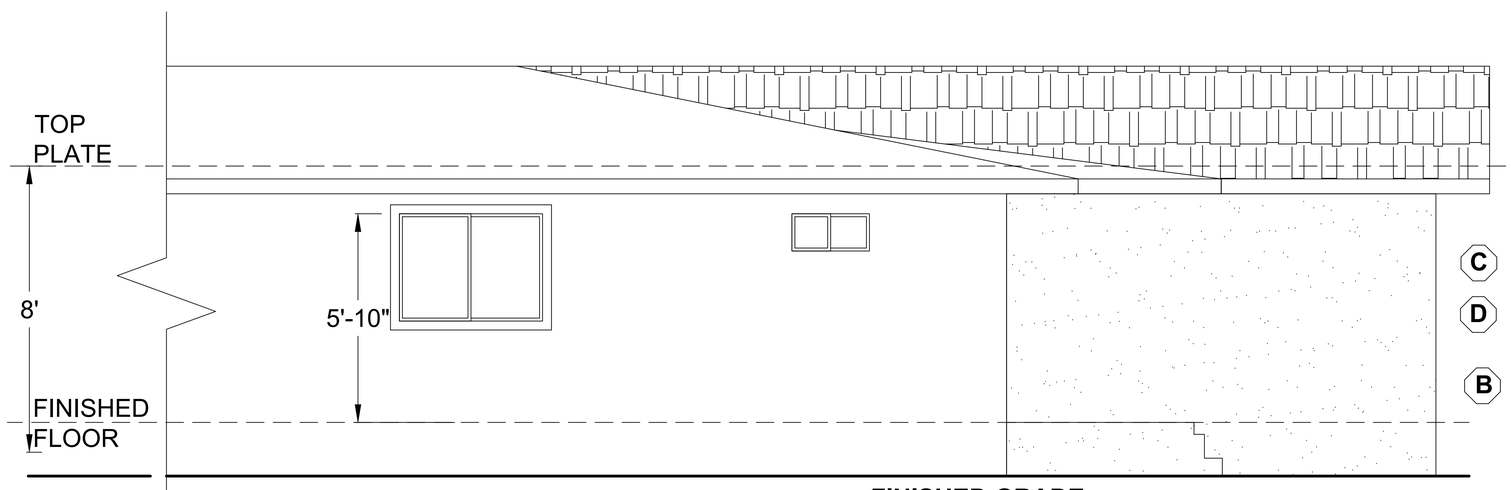

LEFT

ELEVATIONS
1/2" = 1'-0"

ELEVATION KEY NOTES

SEE SHEET A3 FOR KEY NOTES

WILDFIRE ZONE PLAN NOTES

1. IN ROOF COVERINGS WHERE THE PROFILE CREATES SPACE BETWEEN THE ROOF COVERING AND COMBUSTIBLE ROOF DECKING, SPECIFY ONE OF THE FOLLOWING MEANS OF PROTECTING SPACES AT EAVES ENDS.
   a. FIRE-STOPPING WITH APPROVED MATERIALS
   b. ONE LAYER OF 72 POUND (32.4 KG) MINERAL-SURFACED NON-PERFORATED CAP SHEET COMPLYING WITH ASTM D 3909 INSTALLED OVER THE COMBUSTIBLE DECKING
   c. OTHERWISE CONSTRUCTED TO PREVENT INTRUSION OF FLAMES AND EMBERS

2. EXPOSED VALLEY FLASHINGS SHALL BE CONSTRUCTED WITH NOT LESS THAN 0.019-INCH (NO. 26 GALVANIZED SHEET GAGE) CORROSION-RESISTANT METAL INSTALLED OVER A MINIMUM 36-INCH-WIDE UNDERLAYMENT CONSISTING OF ONE LAYER OF NO. 72 ASTM CAP SHEET RUNNING THE FULL LENGTH OF THE VALLEY.

3. ANY ROOF GUTTERS SHALL BE PROVIDED WITH MEANS TO PREVENT ACCUMULATION OF LEAVES AND DEBRIS.

4. SKYLIGHTS SHALL BE TEMPERED GLASS.

5. ALL VENTS (ROOF, FOUNDATION, COMBUSTION-AIR, ETC) SHALL RESIST THE INTRUSION OF FLAMES AND EMBERS

6. VENTILATION OPENINGS FOR ENCLOSED ATTICS, EAVE SOFFIT SPACES, ENCLOSED RAFTER SPACES FORMED WHERE CEILINGS ARE APPLIED DIRECTLY TO THE UNDERSIDE OF ROOF RAFTERS, UNDERFLOOR VENTILATION OPENINGS, AND VENT OPENINGS IN EXTERIOR WALLS AND EXTERIOR DOORS SHALL BE LISTED TO ASTM E 2886 AND COMPLY WITH ALL OF THE FOLLOWING:
   a. THERE SHALL BE NO FLAMING IGNITION OF THE COTTON MATERIAL DURING THE EMBER INTRUSION TEST
   b. THERE SHALL BE NO FLAMING IGNITION DURING THE INTEGRITY TEST PORTION OF THE FLAME INTRUSION TEST
   c. THE MAXIMUM TEMPERATURE OF THE UNEXPOSED SIDE OF THE VENT SHALL NOT EXCEED 662 DEGREES FAHRENHEIT (350 DEGREES CELSIUS)

7. EXTERIOR WALL FINISH SHALL COMPLY WITH ONE OF THE FOLLOWING:
   a. NON-COMBUSTIBLE MATERIAL (STUCCO, CEMENT FIBER BOARD, ETC)
      - STUCCO AND CEMENT PLASTER USED AS AN EXTERIOR WALL COVERING SHALL BE 7/8-INCH THICK
      - NONCOMBUSTIBLE OR FIRE-RETARDANT-TREATED WOOD SHAKE USED AS AN EXTERIOR WALL COVERING SHALL HAVE AN UNDERLAYMENT OF MINIMUM 1/2-INCH FIRE-RATED GYPSUM SHEATHING THAT IS TIGHTLY BUTTED, OR TAPED AND MUDDED, OR AN UNDERLAYMENT OF OTHER IGNITION-RESISTANT MATERIAL APPROVED BY THE BUILDING OFFICIAL.
   b. IGNITION-RESISTANT MATERIAL

8. PATIO COVER, CARPORT AND TRELLIS CONSTRUCTION WITH ALL EXPOSED ELEMENTS SHALL COMPLY WITH ANY OF THE FOLLOWING:
   - NON-COMBUSTIBLE MATERIAL
   - 1-HOUR FIRE-RESISTANT-RATED MATERIAL
   - APPROVED EXTERIOR FIRE-RETARDANT TREATED WOOD
   - MODIFIED HEAVY TIMBER (MIN 2X TONGUE-AND-GROOVE SHEATHING, 4X6 RAFTERS/BEAMS, 6X6 POSTS)

9. DECK, BALCONY, AND EXTERIOR STAIR CONSTRUCTION, WITH ALL EXPOSED ELEMENTS SHALL COMPLY WITH THE FOLLOWING:
   a. FRAMING
      - NON-COMBUSTIBLE MATERIAL
      - 1-HOUR FIRE-RESISTANT-RATED MATERIAL
      - APPROVED EXTERIOR FIRE-RETARDANT TREATED WOOD
      - MODIFIED HEAVY TIMBER (MIN 4X8 JOISTS, 4X10 OR 6X8 BEAMS, 6X6 POSTS)
   b. DECKING AND TREAD MATERIAL (ANY OF THE FOLLOWING):
      - NON-COMBUSTIBLE MATERIAL
      - 1-HOUR FIRE-RESISTANT-RATED MATERIAL
      - APPROVED EXTERIOR FIRE-RETARDANT TREATED WOOD
      - APPROVED ALTERNATIVE DECKING MATERIAL MEETING TESTS REQUIREMENTS OF COUNTY BUILDING CODE 92.1.709A.1.4)

10. EXTERIOR GARAGE DOORS SHALL RESIST THE INTRUSION OF EMBERS INTO THE GARAGE BY LIMITING THE SIZE OF ANY GAPS AT THE BOTTOM, SIDES, AND TOP OF THE DOOR TO 1/8 INCH OR LESS USING ONE OF THE FOLLOWING METHODS
    a. WEATHER-STRIPPING PRODUCTS WITH TENSILE STRENGTH AND FLAMMABILITY RATING PER CBC 708A.4
    b. DOOR OVERLAPS ONTO JAMBS AND HEADERS
    c. GARAGE DOOR JAMBS AND HEADERS COVERED WITH METAL FLASHING

11. PAPER-FACED INSULATION PROHIBITED IN ATTICS OR OTHER VENTILATED SPACES.

12. FENCES OR ANY STRUCTURE WITHIN 5 FEET OF BUILDING SHALL BE CONSTRUCTED PER ONE OF THE FOLLOWING:
    a. NON-COMBUSTIBLE MATERIAL
    b. APPROVED EXTERIOR FIRE-RETARDANT TREATED WOOD
    c. MATERIAL MEETING SAME FIRE-RESISTIVE STANDARDS AS EXTERIOR WALLS OF BUILDINGS

AZTEC DRAFTING & DESIGN
9119 JAMACHA RD, SUITE 115
SPRING VALLEY, CA 91977
CELL: 619-414-8506

DRAWINGS PROVIDED BY:
AZTEC DRAFTING & DESIGN
DESIGNER: LEONEL SOLIS
EMAIL: LEONSOLIS@GMAIL.COM

JUAN MANUEL DIARTE
DETACH ADDITIONAL DWELLING UNIT
1523 E 14th St. NATIONAL CITY CA 91950
APN: 557-342-09-00
UTILITY: SDG&E
AJH: NATIONAL CITY

ADDITION ELEVATIONS

REVISION		
0	-	02/14/22

PROJECT NO.
P013

SHEET NO.
A-7

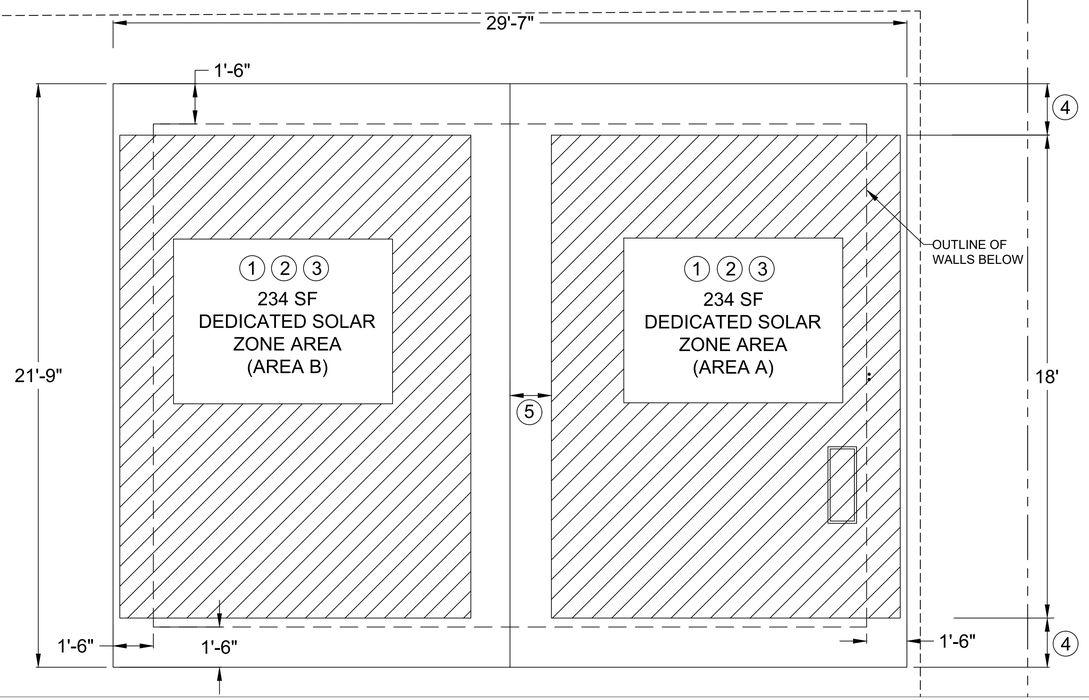

DEDICATED SOLAR ZONE AREA

$\frac{3}{8}$" = 1'-0"

NOTE:
INSTALLATION OF ROOFING SHALL BE IN ACCORDANCE WITH
MANUFACTURER'S SPECIFICATIONS

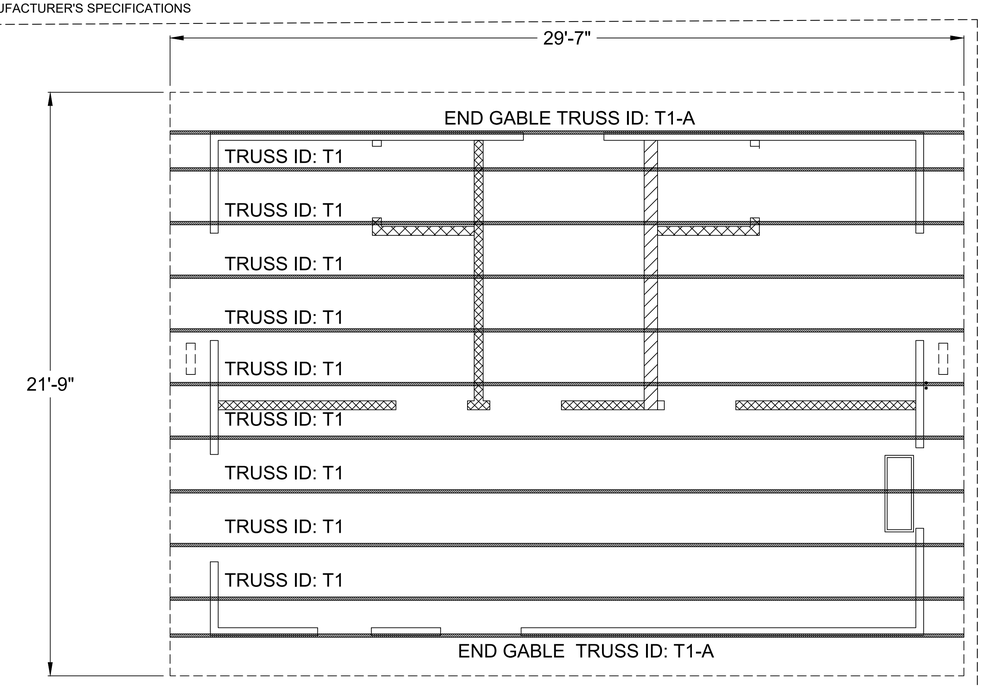

ROOF PLAN / TRUSS LAYOUT

$\frac{3}{8}$" = 1'-0"

ATTIC VENTILATION REQUIRED

NET FREE CROSS VENTILATION AREA = $\frac{1}{300}$
VENT AREA REQ'D = 498 ft^2 / 300 = 1.66 ft^2 x 144 = 240 in^2

GABLE END VENTS
NFVA = 110 in^2
QTY = 2 VENTS
VENT AREA PROVIDED = 2 x 110 in^2 = 220 in^2

EAVE VENTS
NFVA: 71 in^2
QTY = 2 VENTS
VENT AREA PROVIDED = 2 x 71 in^2 = 142 in^2

TOTAL VENT AREA PROVIDED
(220 in^2) + (142 in^2) = 362 in^2 > 240 in^2

SOLAR READY KEY NOTES

1. MIN 250 S.F. SOLAR ZONE AREA
2. DEDICATED SOLAR ZONE AREA LOCATED BETWEEN 110 AND 270 DEGREES OF TRUE NORTH - USE AREA A OR B AS NEEDED.
3. NO OBSTRUCTIONS - INCLUDING VENTS, CHIMNEYS, SKYLIGHTS, ARCHITECTURAL FEATURES, ROOF-MOUNTED EQUIPMENT - LOCATED WITHIN SOLAR ZONE.
4. 3" MIN FIRE FIGHTER ACCESS
5. 1'-6" SMOKE VENTILATION SETBACK AT RIDGES
6. SOLAR PANEL WILL BE INSTALLED UNDER A DEFERRED SUBMITTAL.

AZTEC DRAFTING & DESIGN
9119 JAMACHA RD, SUITE 115
SPRING VALLEY, CA 91977
CELL: 619-414-8506

DRAWINGS PROVIDED BY:
AZTEC DRAFTING & DESIGN
DESIGNER: LEONEL SOLIS
EMAIL: LEONSOLIS@GMAIL.COM

JUAN MANUEL DIARTE
DETACH ADDITIONAL DWELLING UNIT
1523 E 14th St. NATIONAL CITY CA 91950
APN: 557-342-09-00
UTILITY: SDG&E
AJH: NATIONAL CITY

ROOF PLAN / TRUSS LAYOUT

REVISION		
0	-	02/14/22

PROJECT NO.
P013
SHEET NO.
A-8

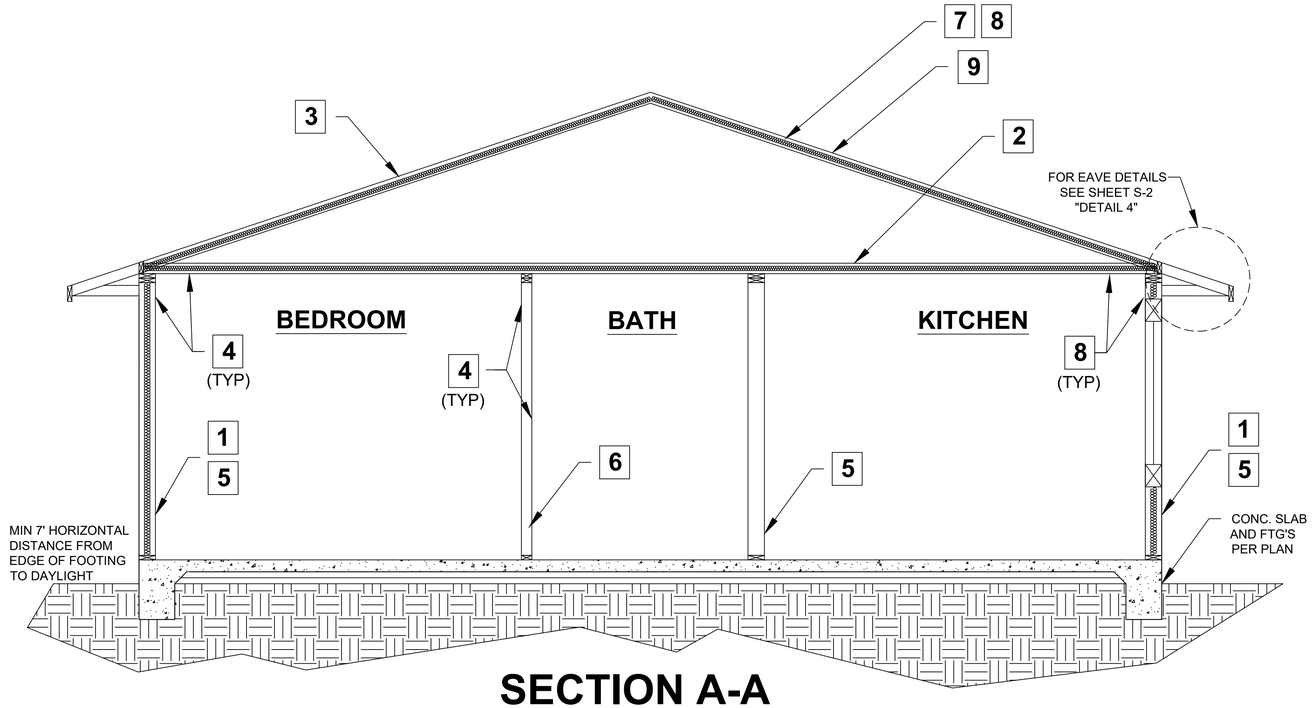

SECTION A-A

SECTION KEY NOTES

1. WALL INSULATION: R 15
2. CEILING INSULATION: R 30
3. ROOF (TOP CHORD) INSULATION: R 0
4. INTERIOR FINISH: $\frac{1}{2}$" GYPSUM BOARD
5. EXTERIOR WALL/PLUMBING WALL: 2X6 STUD WALL
6. INTERIOR WALL: 2X4 STUD WALL
7. RADIANT BARRIER IS REQUIRED
8. CLIMATE ZONE 14 PROJECT (Y or N) if yes, see below:

   A CLASS I OR II VAPOR RETARDER SHALL BE INSTALLED ON THE CONDITIONED SPACE SIDE OF ALL INSULATION IN ALL EXTERIOR WALLS AND VENTED ATTICS
9. MANUFACTURED TRUSSES

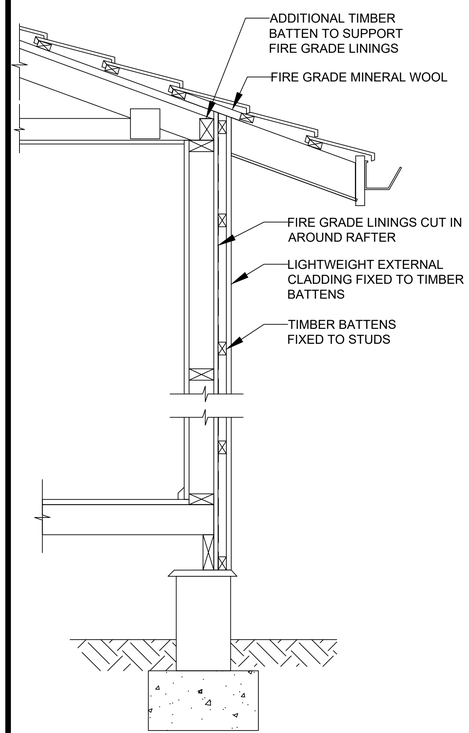

ONE-HOUR FIREWALL
1" = 1'-0"

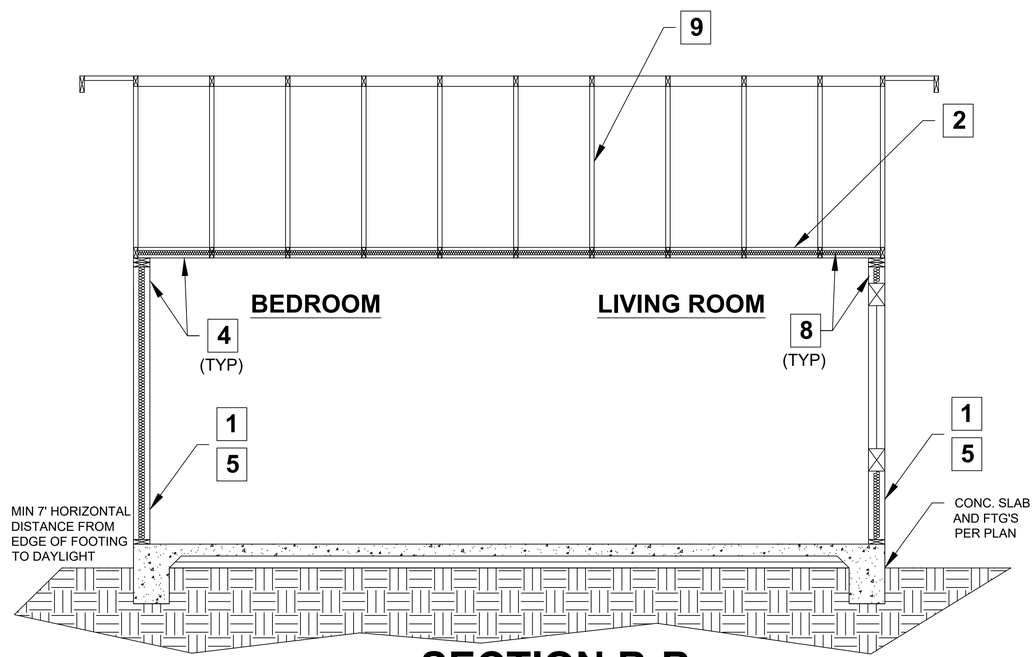

SECTION B-B

SECTIONS
1/2" = 1'-0"

AZTEC DRAFTING & DESIGN
9119 JAMACHA RD, SUITE 115
SPRING VALLEY, CA 91977
CELL: 619-414-8506

DRAWINGS PROVIDED BY:
AZTEC DRAFTING & DESIGN
DESIGNER: LEONEL SOLIS
EMAIL: LEONEL@GMAIL.COM

JUAN MANUEL DIARTE
DETACH ADDITIONAL DWELLING UNIT
1523 E 14th St. NATIONAL CITY CA 91950
APN: 557-342-09-00
UTILITY: SDG&E
AJH: NATIONAL CITY

SECTIONS & DETAILS

REVISION		
0	–	02/14/22

PROJECT NO.
P013

SHEET NO.
A-9

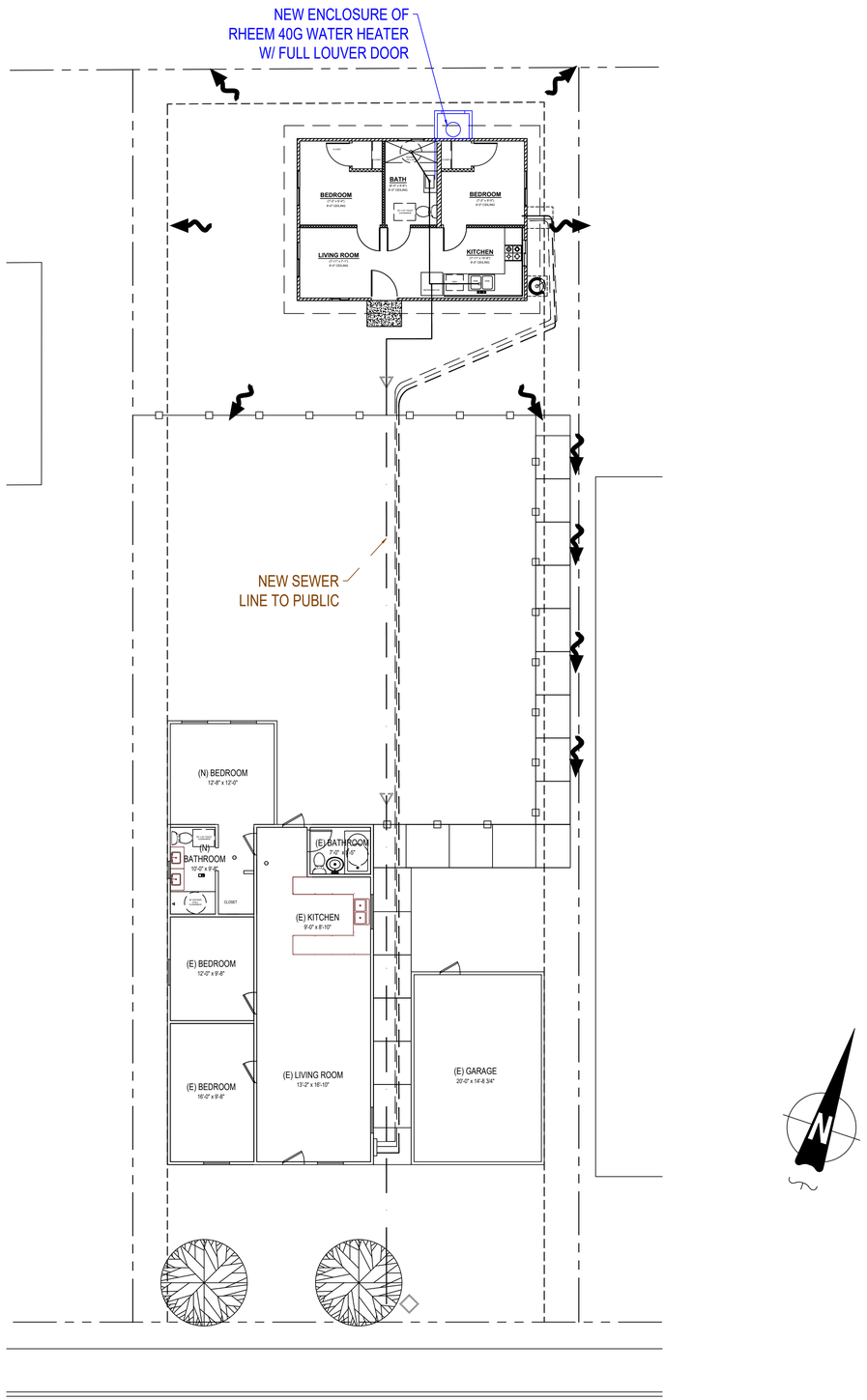

1 **UTILITY LAYOUT PLAN**
3/4"=1'

PLUMBING NOTES

1. MIN. ¼" PER FOOT SLOPE FOR WASTE PIPES PER SECTION 708 CPC
2. BUILDING DRAIN AND VENT PIPING MATERIALS SHALL COMPLY WITH SECTIONS 701.0 AND 903.0 OF THE CALIFORNIA PLUMBING CODE.
3. ALL SANITARY SYSTEM MATERIALS SHALL BE LISTED BY AN APPROVED LISTING AGENCY.
4. EACH VENT SHALL RISE VERTICALLY TO A POINT NOT LESS THAN SIX(6) INCHES ABOVE THE FLOOD LEVEL RIM OF THE FIXTURE SERVED BEFORE OFFSETTING HORIZONTALLY OR BEFORE BEING CONNECTED TO ANY OTHER VENT.
5. ALL DRAINAGE WASTE AND VENT PIPE SHALL COMPLY WITH TABLE 703.2 CPC.
6. SHOWER AND TUB-SHOWER COMBINATIONS SHALL BE PROVIDED WITH MIXING VALVES PER SECTION 408.3 CPC.
7. TOILETS SHALL BE ULTRA-LOW FLUSH TYPE (1.28 G.P.F. MAX.)
8. EACH SHOWERHEAD SHALL NOT EXCEED A WATER FLOW OF 1.8 GPM.
9. KITCHEN SINK FAUCET SHALL NOT EXCEED A WATER FLOW 1.8 GPM.
10. EACH LAVATORY FAUCET SHALL NOT EXCEED A WATER FLOW OF 1.2 GPM.
11. ALL SANITARY SYSTEM MATERIALS SHALL BE LISTED BY AN APPROVED LISTING AGENCY.
12. COPPER PIPING FOR ALL POTABLE WATER SYSTEMS.

GENERAL REQUIREMENTS

1. ALL SURFACE WATER TO DRAIN AWAY FROM BUILDING AND PROPERTY LINE TO ALLEY OR STREET.
2. CONTRACTOR TO COMPLY WITH ALL OSHA REQUIREMENTS..
3. STATE HEALTH & SAFETY CODE SEC. 17921.9 BANS THE USE OF CHLORINATED POLYVINYL CHLORIDE (CPVC) FOR INTERIOR WATER-SUPPLY PIPING.
4. VOC's ARE TO BE DOCUMENTED FOR ADHESIVES, PAINTS AND COATINGS, CARPET, COMPOSITION WOOD PRODUCTS. DOCUMENTATION TO BE PROVIDED BY PRODUCT CERTIFICATION AND SPECIFICATIONS. CHANIN OF CUSTODY CERTIFICATIONS, OR OTHER MEANS ACCEPTABLE TO THE ENFORCING AGENCY. CGBSC 4.504.2.
5. ALL SHOWER COMPARTMENTS, REGARDLESS OF SHAPE, SHALL BE CAPABLE OF ENCOMPASSING A 30 INCH CIRCLE.
6. PERMANENT VACUUM BREAKERS SHALL BE INCLUDED WITH ALL NEW HOSE BIBS.
7. ALL ABS AND PVC PIPING AND FITTINGS SHALL BE ENCLOSED WITHIN WALLS AND FLOORS COVERED WITH 'TYPE 'X' GYPSUM BOARD OR SIMILAR ASSEMBLIES THAT PROVIDE THE SAME LEVEL OF FIRE PROTECTION. PROTECTION OF MEMBRANE PENETRATIONS IS NOT REQUIRED.
8. SHOWER COMPARTMENTS AND BATHTUBS WITH INSTALLED SHOWER HEADS SHALL BE FINISHED WITH A NON-ABSORBENT SURFACE THAT EXTENDS TO A HEIGHT OF NOT LESS THAN 6-FEET ABOVE FLOOR. (CRC R307.2)

AZTEC DRAFTING & DESIGN
9119 JAMACHA RD, SUITE 115
SPRING VALLEY, CA 91977
CELL: 619-414-8506

DRAWINGS PROVIDED BY:
AZTEC DRAFTING & DESIGN
DESIGNER: LEONEL SOLIS
EMAIL: LEONSOLIS@GMAIL.COM

JUAN MANUEL DIARTE
DETACH ADDITIONAL DWELLING UNIT
1523 E 14th St. NATIONAL CITY CA 91950
APN: 557-342-09-00
UTILITY: SDG&E
AJH: NATIONAL CITY

UTILITY LAYOUT

REVISION		
0	–	02/14/22

PROJECT NO.
P013

SHEET NO.
A-10

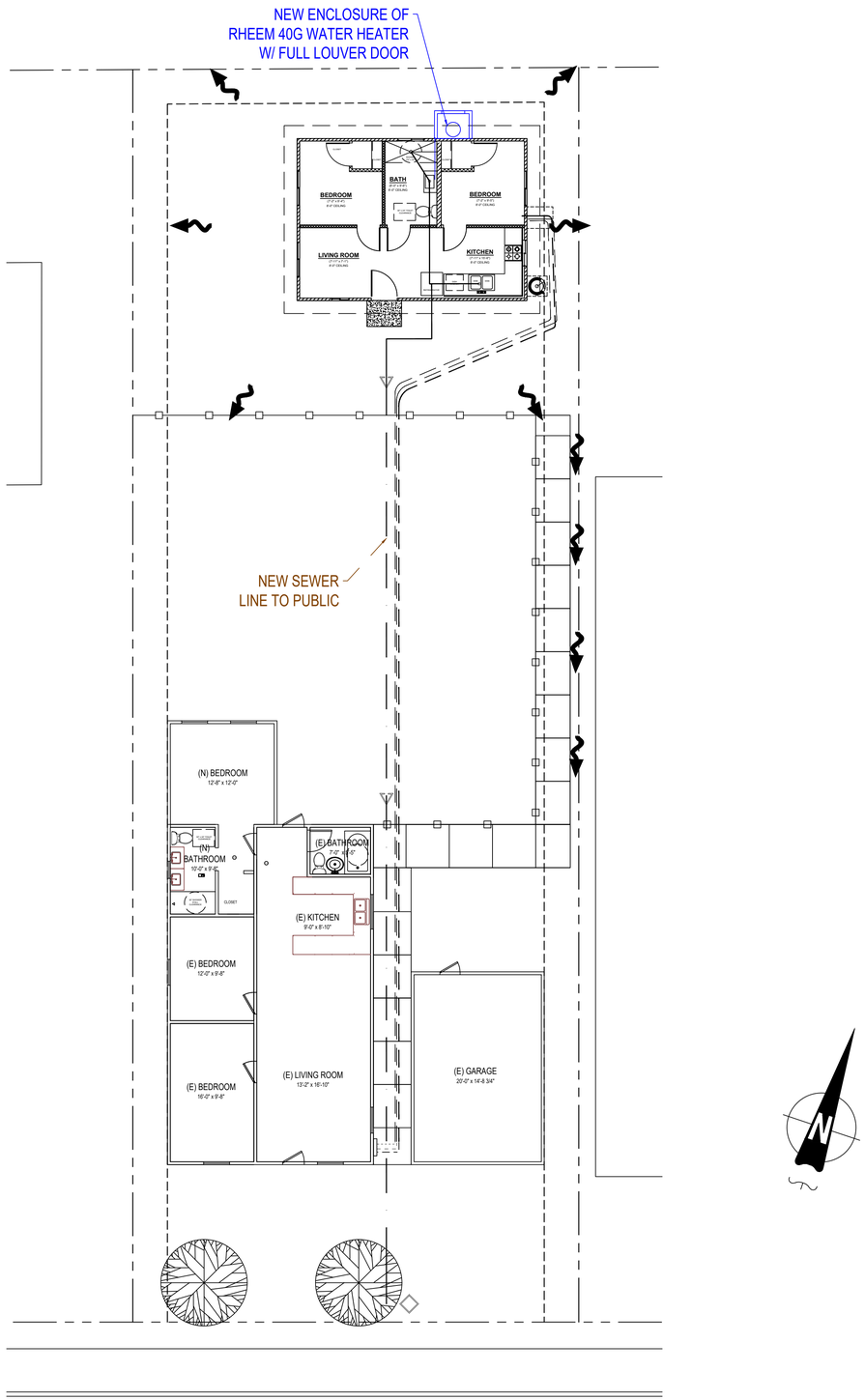

1 **UTILITY LAYOUT PLAN**
3/4"=1'

PLUMBING NOTES

1. MIN. ¼" PER FOOT SLOPE FOR WASTE PIPES PER SECTION 708 CPC
2. BUILDING DRAIN AND VENT PIPING MATERIALS SHALL COMPLY WITH SECTIONS 701.0 AND 903.0 OF THE CALIFORNIA PLUMBING CODE.
3. ALL SANITARY SYSTEM MATERIALS SHALL BE LISTED BY AN APPROVED LISTING AGENCY.
4. EACH VENT SHALL RISE VERTICALLY TO A POINT NOT LESS THAN SIX(6) INCHES ABOVE THE FLOOD LEVEL RIM OF THE FIXTURE SERVED BEFORE OFFSETTING HORIZONTALLY OR BEFORE BEING CONNECTED TO ANY OTHER VENT.
5. ALL DRAINAGE WASTE AND VENT PIPE SHALL COMPLY WITH TABLE 703.2 CPC
6. SHOWER AND TUB-SHOWER COMBINATIONS SHALL BE PROVIDED WITH MIXING VALVES PER SECTION 408.3 CPC.
7. TOILETS SHALL BE ULTRA-LOW FLUSH TYPE (1.28 G.P.F. MAX.)
8. EACH SHOWERHEAD SHALL NOT EXCEED A WATER FLOW OF 1.8 GPM.
9. KITCHEN SINK FAUCET SHALL NOT EXCEED A WATER FLOW 1.8 GPM.
10. EACH LAVATORY FAUCET SHALL NOT EXCEED A WATER FLOW OF 1.2 GPM.
11. ALL SANITARY SYSTEM MATERIALS SHALL BE LISTED BY AN APPROVED LISTING AGENCY.

GENERAL REQUIREMENTS

1. ALL SURFACE WATER TO DRAIN AWAY FROM BUILDING AND PROPERTY LINE TO ALLEY OR STREET.
2. CONTRACTOR TO COMPLY WITH ALL OSHA REQUIREMENTS..
3. STATE HEALTH & SAFETY CODE SEC. 17921.9 BANS THE USE OF CHLORINATED POLYVINYL CHLORIDE (CPVC) FOR INTERIOR WATER-SUPPLY PIPING.
4. VOC's ARE TO BE DOCUMENTED FOR ADHESIVES, PAINTS AND COATINGS, CARPET, COMPOSITION WOOD PRODUCTS. DOCUMENTATION TO BE PROVIDED BY PRODUCT CERTIFICATION AND SPECIFICATIONS. CHANIN OF CUSTODY CERTIFICATIONS, OR OTHER MEANS ACCEPTABLE TO THE ENFORCING AGENCY. CGBSC 4.504.2.
5. ALL SHOWER COMPARTMENTS, REGARDLESS OF SHAPE, SHALL BE CAPABLE OF ENCOMPASSING A 30 INCH CIRCLE.
6. PERMANENT VACUUM BREAKERS SHALL BE INCLUDED WITH ALL NEW HOSE BIBS.
7. ALL ABS AND PVC PIPING AND FITTINGS SHALL BE ENCLOSED WITHIN WALLS AND FLOORS COVERED WITH 'TYPE 'X' GYPSUM BOARD OR SIMILAR ASSEMBLIES THAT PROVIDE THE SAME LEVEL OF FIRE PROTECTION. PROTECTION OF MEMBRANE PENETRATIONS IS NOT REQUIRED.
8. SHOWER COMPARTMENTS AND BATHTUBS WITH INSTALLED SHOWER HEADS SHALL BE FINISHED WITH A NON-ABSORBENT SURFACE THAT EXTENDS TO A HEIGHT OF NOT LESS THAN 6-FEET ABOVE FLOOR. (CRC R307.2)

AZTEC DRAFTING & DESIGN
9119 JAMACHA RD, SUITE 115
SPRING VALLEY, CA 91977
CELL: 619-414-8506

DRAWINGS PROVIDED BY:
AZTEC DRAFTING & DESIGN
DESIGNER: LEONEL SOLIS
EMAIL: LEONSOLIS@GMAIL.COM

JUAN MANUEL DIARTE
DETACH ADDITIONAL DWELLING UNIT
1523 E 14th St. NATIONAL CITY CA 91950
APN: 557-342-09-00
UTILITY: SDG&E
AJH: NATIONAL CITY

UTILITY LAYOUT

REVISION		
0	–	02/14/22

PROJECT NO.
P013
SHEET NO.
A-10

STRUCTURAL NOTES

A. BASIS OF DESIGN

1. THE STRUCTURE HAS BEEN DESIGNED IN ACCORDANCE WITH THE 2019 CALIFORNIA BUILDING CODE (C.B.C.)

2. LIVE LOADS (REDUCED IN ACCORDANCE WITH THE 2019 C.B.C.)

SLOPED ROOF 40 psf

3. LATERAL LOADS & CRITERIA

BUILDING SITE CLASS	D
LATITUDE	32.6753
LONGITUDE	−117.0890
S_S	1.127
S_1	0.382
S_{DS}	0.788
S_{D1}	0.417
R	6.50
R_o	3.0
C_d	4.0
C_t	0.02
X	0.75

STRUCTURAL SYSTEM:
BEARING WALLS SYSTEM LIGHT FRAMED WALLS SHEATHED WITH WOOD STRUCTURAL PANELS RATED FOR SHEAR RESISTANCE OR STEEL SHEETS.

SOIL PROFILE	Sd
IMPORTANCE FACTOR	1.0
WIND EXPOSURE CATEGORY	C
ROOF ANGLE	15°
BASIC WIND SPEED	110 mph

B. GENERAL NOTES:

1. THE CONTRACTOR SHALL VERIFY DIMENSIONS, ELEVATIONS, AND SITE CONDITIONS BEFORE STARTING ANY WORK AND NOTIFY THE ARCHITECT/ENGINEER IMMEDIATELY OF ANY DISCREPANCIES.

2. COORDINATE ELEVATIONS, SLOPES AND DRAINAGE REQUIREMENTS WITH THE ARCHITECTURAL DRAWINGS.

3. SPECIFIC NOTES AND DETAILS ON DRAWINGS SHALL TAKE PRECEDENCE OVER GENERAL NOTES AND TYPICAL DETAILS.

4. WHERE NO DETAILS ARE SHOWN OR NOTED IN ANY PART OF THE WORK THE DETAILS USED SHALL BE THE SAME AS FOR OTHER SIMILAR WORK.

5. WHEN A DETAIL IS IDENTIFIED AS TYPICAL, THE CONTRACTOR IS TO APPLY THIS DETAIL IN ESTIMATING AND CONSTRUCTION TO EVERY LIKE CONDITION WHETHER OR NOT THE REFERENCE IS REPEATED IN EVERY INSTANCE.

6. THE CONTRACTOR SHALL IMMEDIATELY NOTIFY THE ARCHITECT/ENGINEER OF ANY SITE CONDITIONS NOT REFLECTED ON THE WORKING DRAWINGS OR DIFFERENT FROM THE MAXIMUM OR MINIMUM DIMENSIONS INDICATED. INCLUDING CONFLICT IN GRADES, ADVERSE SOIL CONDITIONS, GROUND WATER PRESENT, DEEPENED FOOTINGS, UNCOVERED AND UNEXPECTED UTILITY LINES, ETC.

7. ALL DRAWINGS ARE CONSIDERED TO BE A PART OF THE CONTRACT DOCUMENTS. THE CONTRACTOR SHALL BE RESPONSIBLE FOR THE REVIEW AND COORDINATION OF ALL DRAWINGS AND SPECIFICATIONS PRIOR TO THE START OF CONSTRUCTION. ANY DISCREPANCIES THAT OCCUR SHALL BE BROUGHT TO THE ATTENTION OF THE ARCHITECT PRIOR TO START OF CONSTRUCTION SO THAT A CLARIFICATION CAN BE ISSUED. ANY WORK PERFORMED IN CONFLICT WITH THE CONTRACT DOCUMENTS OR ANY CODE REQUIREMENTS SHALL BE CORRECTED BY THE CONTRACTOR AT THEIR OWN EXPENSE.

8. MATERIALS AND WORKMANSHIP SHALL CONFORM TO REQUIREMENTS OF THE CURRENT CALIFORNIA BUILDING CODE AS AMENDED BY THE GOVERNING AUTHORITY AND APPLICABLE REGULATIONS OF THE GOVERNING JURISDICTION, INCLUDING THE STATE OF CALIFORNIA DIVISION OF INDUSTRIAL SAFETY.

9. DRAWINGS SHALL NOT BE SCALED. COORDINATE DIMENSIONS WITH ARCHITECTURAL DRAWINGS.

10. ASTM SPECIFICATIONS ON THE DRAWINGS SHALL BE OF THE LATEST REVISION.

11. CONSTRUCTION MATERIALS SHALL BE SPREAD OUT IF PLACED ON FRAMED FLOOR. LOADS SHALL NOT EXCEED THE DESIGN LIVE LOAD PER SQUARE FOOT. PROVIDE ADEQUATE SHORING AND/OR BRACING WHERE STRUCTURE HAS NOT ATTAINED DESIGN STRENGTH.

C. TEMPORARY WORK AND SITE SAFETY:

1. THESE DRAWINGS SHOW THE REQUIREMENTS FOR PERMANENT COMPLETED STRUCTURE ONLY. TEMPORARY WORKS REQUIRED TO COMPLETE THE CONSTRUCTION SHALL BE THE RESPONSIBILITY OF THE CONTRACTOR. STRUCTURAL ENGINEER IS NOT RESPONSIBLE FOR DESIGN OR FIELD REVIEW OF TEMPORARY AND ANCILLARY WORK.

2. THE CONTRACTOR IS RESPONSIBLE FOR SAFETY IN AND AROUND THE JOBSITE. PROPER AND SAFE METHODS OF CONSTRUCTION SHALL BE USED AT ALL TIMES INCLUDING GUYING AND BRACING OF INCOMPLETE STRUCTURES, FORMWORK, SHORING, RESHORING, FALSEWORK, PLATFORMS, SCAFFOLDING, BARRIERS, WALKWAYS, ETC. AND CONTROL THE INTENSITY, DURATION AND LOCATION OF CONSTRUCTION LOADS UPON CONSTRUCTION.

I. MACHINE APPLIED NAILING:

1. THE USE OF MACHINE NAILING IS SUBJECT TO A SATISFACTORY JOB SITE DEMONSTRATION AND THE APPROVAL OF THE PROJECT ENGINEER. THE APPROVAL IS SUBJECT TO CONTINUED SATISFACTORY PERFORMANCE.

2. NAIL HEADS SHALL NOT PENETRATE THE OUTER PLY MORE THAN WOULD BE NORMAL FOR A HAND HAMMER.

3. EDGE DISTANCES SHALL BE MAINTAINED. SHINERS SHALL BE REPLACED. IF NAIL HEADS PENETRATE THE OUTER PLY MORE THAN WOULD BE NORMAL FOR A HAND HAMMER, OR IF MINIMUM ALLOWABLE EDGE DISTANCES ARE NOT MAINTAINED THE PERFORMANCE WILL BE DEEMED UNSATISFACTORY.

4. MACHINE NAILING WILL NOT BE APPROVED FOR PLYWOOD 5/16" OR LESS IN THICKNESS.

D. FOUNDATION

1. FOUNDATION DESIGN IS BASED ON THE 2019 CBC.
2. ALLOWABLE BEARING SOIL PRESSURE: 1,500 psf

3. THE MAXIMUM ALLOWABLE SOIL BEARING PRESSURE SHALL BE 1,500 psf. ALLOWABLE BEARING MAY BE INCREASED BY 1/3 FOR WIND AND SEISMIC LOAD CASES.

4. BOTTOM OF FOOTING SHALL BE EMBEDDED AT LEAST 12 INCHES BELOW LOWEST ADJACENT FINISHED (PAD) GRADE.

5. FOOTING DEPTHS SHOWN ARE FOR BIDDING PURPOSES ONLY AND ARE ASSUMED TO BE IN SUITABLE BEARING MATERIALS. FOOTING DEPTHS MAY REQUIRE DEEPENING PER DIRECTION OF THE ENGINEER.

6. ABANDONED FOOTINGS, UTILITIES, ETC. THAT INTERFERE WITH NEW CONSTRUCTION SHALL BE REMOVED.

7. THE FOOTING EXCAVATIONS SHALL BE KEPT FREE FROM LOOSE MATERIAL AND STANDING WATER. CONTRACTOR SHALL PROVIDE FOR DE−WATERING OF EXCAVATIONS FROM SURFACE OR SEEPAGE WATER.

8. FOOTING AND UTILITY TRENCH BACKFILL SHALL BE MECHANICALLY COMPACTED IN LAYERS. FLOODING WILL NOT BE PERMITTED.

9. SUBMIT COMPACTION TEST REPORTS FOR ALL FILL BY A QUALIFIED TESTING LAB TO ENGINEER AND BUILDING DEPARTMENT PRIOR TO REQUESTING FOUNDATION INSPECTION.

10. CONTRACTOR SHALL PROVIDE FOR DESIGN AND INSTALLATION OF ALL CRIBBING, SHEATHING, UNDERPINNING, AND SHORING REQUIRED TO SAFELY RETAIN ALL GRADES AND STRUCTURES.

11. FOOTING ELEVATIONS SHOULD BE LOCATED SUCH THAT THE BASES OF THE FOUNDATIONS ARE A MINIMAL HORIZONTAL DISTANCE OF SEVEN FEET FROM THE FACE OF SLOPE.

12. SLAB ON GRADE RESTRAINING THE BOTTOM OF RETAINING WALLS SHALL BE IN PLACE PRIOR TO BACKFILLING OF WALLS.

13. WALLS RETAINING EARTH SHALL BE DRAINED TO DAYLIGHT OR DRAINAGE STRUCTURE AND BACKFILLED PER SOIL ENGINEER'S RECOMMENDATION.

14. FOUNDATIONS SUPPORTING WOOD SHALL EXTEND 8" MINIMUM ABOVE ADJACENT FINISH GRADE. PROVIDE 18" CLEARANCE UNDER WOOD JOISTS AND 12" CLEARANCE UNDER WOOD GIRDERS.

E. REINFORCING STEEL

1. DETAILING, FABRICATION AND ERECTION OF REINFORCING BARS MUST FOLLOW THE A.C.I. MANUAL OF STANDARD PRACTICE FOR DETAILING REINFORCED CONCRETE STRUCTURES, A.C.I. 315−LATEST ED. U.O.N.

2. REINFORCING BARS SHALL CONFORM TO THE 2019 CBC AND THE STANDARD SPECIFICATION FOR DEFORMED BILLET−STEEL BARS FOR CONCRETE REINFORCEMENT, ASTM DESIGNATION A−615, GRADE 60, U.O.N.

3. LAPS AT BAR SPLICES SHALL BE: 42 BAR DIA. (18" MIN.) FOR CONCRETE U.O.N. 48 BAR DIA. (24" MIN.)

4. REINFORCING BARS SHALL BE PROVIDED WITH THE FOLLOWING CONCRETE COVER:

CONC. CAST AGAINST EARTH	3"
FORMED CONC. EXPOSED TO EARTH/WEATHER	
#5 OR LARGER	1−1/2"
#6 OR LARGER	2"
SLABS (#11 AND SMALLER)	1"

5. VERTICAL BARS SHALL BE ACCURATELY POSITIONED AT THE CENTER OF THE WALL, U.O.N. ON DETAILS, AND SHALL BE TIED IN PLACE AT THE TOP AND BOTTOM.

6. PROVIDE #3 SPACER TIES AT 30" (75 mm) ON CENTER IN ALL BEAMS AND FOOTINGS TO SECURE REINFORCING BARS IN PLACE, U.O.N.

F. REINFORCED CONCRETE (GENERAL)

1. CONCRETE CONSTRUCTION SHALL CONFORM WITH CHAPTER 19 OF THE CODE AND WITH THE PROVISIONS OF ACI 318, LATEST EDITION.

2. CONCRETE MIXES SHALL BE DESIGNED BY A QUALIFIED TESTING LABORATORY AND APPROVED BY THE STRUCTURAL ENGINEER.

3. CEMENT SHALL CONFORM TO ASTM C−150 TYPE I OR II, ALKALI (2019 CBC).

5. READY MIX CONCRETE SHALL BE MIXED AND DELIVERED IN ACCORDANCE WITH ASTM C−94.

6. MINIMUM CONCRETE COMPRESSIVE STRENGTHS AT 28 DAYS, MAXIMUM SLUMPS, AND MAXIMUM WATER/CEMENT RATIOS SHALL BE AS FOLLOWS:

*CONCRETE HAS BEEN DESIGNED FOR 2,500 PSI
MAXIMUM WATER CEMENT RATIO = 0.45. NO SPECIAL INSPECTION REQUIRED

7. WATER MAY BE ADDED ON SITE TO OBTAIN SPECIFIED SLUMPS ONLY IF IT IS ADDED WITHIN ONE HOUR OF BATCHING AND SPECIFIED ON THE BATCH REPORT. CONCRETE SHALL NOT BE PLACED BEYOND 1−1/2 HOURS FOLLOWING BATCHING.

8. NO PIPES OR DUCTS SHALL BE PLACED IN CONCRETE SLABS UNLESS SPECIFICALLY DETAILED. PROVIDE SLEEVES FOR PLUMBING AND ELECTRICAL OPENINGS IN CONCRETE BEFORE PLACING. DO NOT CUT ANY REINFORCING WHICH MAY CONFLICT.

9. CONCRETE SHALL BE MAINTAINED IN A MOIST CONDITION FOR A MINIMUM OF SEVEN DAYS AFTER ITS PLACEMENT. APPROVED CURING COMPOUNDS MAY BE USED IN LIEU OF MOIST CURING.

10. CONCRETE SLAB−ON−GRADE THICKNESS SHOWN IS MINIMUM REQUIRED THICKNESS. FLOORS SHALL BE MONITORED BY TRANSIT LEVEL OR LASER DURING PLACEMENT TO MAINTAIN LEVEL FLOOR.

11. FLYASH SHALL BE LIMITED TO NO MORE THAN 15 PERCENT OF THE TOTAL WEIGHT OF CEMENTIOUS CONCRETE, U.O.N.

12. CONCRETE EXPOSED TO WEATHER SHALL BE AIR ENTRAINED.

13. PROVIDE 1−#5 x 4'−0" LONG DIAGONAL BAR AT CORNERS OF WALL, FLOOR, AND ROOF OPENINGS AND INSIDE CORNERS OF CONCRETE FLOORS. MAKING 45 DEGREES WITH ANY PARALLEL OR PENPENDICULAR LINE OF OPENING.

14. ALL CONSTRUCTION JOINTS IN STRUCTURAL MEMBERS TO BE REVIEWED FOR LOCATION AND DETAIL PRIOR TO CONSTRUCTION. FLEXURAL REINFORCEMENT TO CONTINUE UNINTERRUPTED THROUGH ALL CONSTRUCTION JOINTS. KEYWAYS TO BE PROVIDED PERPENDICULAR TO THE DIRECTION OF LOAD IN ALL JOINTS.

15. WHEN CONCRETE IS PLACED AGAINST EXISTING CONCRETE SURFACES, EXISTING CONCRETE SURFACES SHALL BE THOROUGHLY CLEANED AND THEN SANDBLASTED TO CREATE AN AMPLITUDE OF 1/4" MINIMUM. APPLY A CONCRETE BONDING ADJACENT TO IMPROVE BONDING QUALITY.

G. ROUGH CARPENTRY:

1. ROOF SHEATHING SHALL BE APA RATED AND SHALL CONFORM TO PRODUCT STANDARD PS 1, INTERIOR TYPE WITH EXTERIOR GLUE, IDENTIFICATION INDEX (24/0) UNLESS OTHERWISE NOTED. EQUIVALENT THICKNESS O.S.B. BOARD MAY BE USED IN LIEU OF PLYWOOD ROOF SHEATHING.

2. FLOOR SHEATHING, THICKNESS, GRADE, AND NAILING PER STRUCTURAL PLANS. PLYWOOD SHEATHING SHALL CONFORM TO PRODUCT STANDARD PS 1−80, TONGUE AND GROOVE, INTERIOR TYPE WITH EXTERIOR GLUE, IDENTIFICATION INDEX (32/16). O.S.B. BOARD SHALL NOT BE USED IN LIEU OF PLYWOOD FLOOR SHEATHING.

3. SHEATHING SHALL BE LAID PERPENDICULAR TO FRAMING FOR FLOORS AND ROOFS WITH 4' JOINTS STAGGERED AND CENTERED ON JOISTS. ALL OTHER JOINTS AT FLOORS SHALL BE BLOCKED.

4. PLYWOOD FLOOR SHEATHING SHALL BE GLUED TO ALL FRAMING MEMBERS WITH AN A.P.A. APPROVED ADHESIVE.

5. UNLESS OTHERWISE NOTED, ALL FRAMING LUMBER SHALL BE DOUGLAS FIR LARCH, GRADE−MARKED BY THE W.C.L.I.B. OR W.W.P.A. AS FOLLOWS:

2X JOISTS & RAFTERS	NO. 1
4X & LARGER BEAMS	NO. 1
ALL POSTS	NO. 1
STUDS	NO. 2
PLATES	NO. 1
LEDGERS	NO. 1
BLOCKING	NO. 3
PLYWOOD	A.P.A. RATED
O.S.B. BOARD	A.P.A. RATED

6. SILL PLATES SHALL BE TREATED DOUGLAS FIR OR FOUNDATION REDWOOD. EXTERIOR WALL SILL PLATES SHALL BE SECURED TO CONCRETE WITH 5/8" X 10" LONG ANCHOR BOLTS WITH 7" MINIMUM EMBEDMENT INTO CONCRETE AT A MAXIMUM SPACING OF 32" O.C. AND 12" FROM EACH END. PLATE WASHERS A MINIMUM OF 3 INCH BY 3 INCH BY 1/4 OF AN INCH THICK SHALL BE USED ON EACH BOLT. (FOR SPECIAL CONDITIONS, SEE SHEAR WALL SCHEDULE FOR SHEAR WALL ANCHORAGE).

7. DO NOT BORE OR NOTCH JOISTS, RAFTERS, OR BEAMS, EXCEPT WHERE SHOWN IN DETAILS. OBTAIN ENGINEER'S APPROVAL FOR ANY HOLES OR NOTCHES NOT DETAILED.

8. PROVIDE DOUBLE FLOOR JOISTS UNDER PARALLEL PARTITIONS, U.O.N.

9. PROVIDE 1/2 INCH MINIMUM CLEARANCE BETWEEN TOP PLATES OF INTERIOR NON−BEARING PARTITIONS AND THE BOTTOM CHORD OF TRUSSES.

10. NAILS SHALL BE COMMON WIRE. NAILING SHALL COMPLY WITH TABLE 23−II−B−1 OF THE 2016 C.B.C. NAILS EXPOSED TO WEATHER SHALL BE HOT−DIP GALVANIZED, U.O.N.

11. PROVIDE SOLID BLOCKING AT ENDS AND AT SUPPORTS OF FLOOR JOISTS AND ROOF RAFTERS UNDER PARTITIONS AND AT RIDGE LINE.

12. TOP PLATES OF ALL BEARING WOOD STUD WALLS SHALL BE TWO PIECES, SAME SIZE AS STUDS AND LAPPED 4'−0" MINIMUM WITH NOT LESS THAN 10−16d NAILS AT EACH SIDE OF TOP PLATE BREAK POINT SPACED AT 4" O.C. MAXIMUM UNLESS OTHERWISE NOTED.

13. INTERIOR AND EXTERIOR WOOD POSTS ATTACHED DIRECTLY TO CONCRETE SHALL BE SECURED WITH SIMPSON PB OR EPB POST BASES, AS APPLICABLE, UNLESS OTHERWISE NOTED.

14. STUDS SHALL HAVE FULL BEARING ON PLATE, ALL JOISTS, HEADERS, BEAMS, AND RAFTERS SHALL HAVE A MINIMUM SOLID LEVEL BEARING OF 1.5 INCHES AT EACH END.

15. NOT LESS THAN THREE (3) STUDS SHALL BE INSTALLED AT EVERY CORNER OF AN EXTERIOR OR INTERIOR BEARING WALL.

16. BEAMS, JOISTS, RAFTERS, ETC. SHALL BE INSTALLED WITH THE CROWN SIDE UP.

17. BOLT HOLES IN WOOD SHALL BE DRILLED 1/32" TO 1/16" IN DIAMETER LARGER THAN THE NOMINAL BOLT SIZE. RETIGHTEN ALL NUTS PRIOR TO CLOSING IN.

18. LAG BOLTS SHALL BE PRE−DRILLED TO A DIAMETER OF 60 PERCENT OF THE SHANK DIAMETER. THE BOLT SHALL BE TURNED BY A WRENCH AND NOT HAMMERED.

19. BOLTS SHALL HAVE A 7 DIA. MIN. END DISTANCE AND A 4 DIA. EDGE DISTANCE, U.O.N.

20. STANDARD CUT WASHERS SHALL BE USED UNDER ALL BOLT HEADS AND NUTS AGAINST WOOD. USE HEAVY PLATE OR MALLEABLE IRON WASHERS FOR ALL BOLTS DESIGNED TO ACT IN TENSION, SUCH AS LEDGERS AND HOLD DOWN ANCHORS.

21. PROVIDE FIRE BLOCKING OR JOINT BLOCKING BETWEEN STUDS AT NOT LESS THAN 8'−0" VERTICAL INTERVALS AND AT ALL PLYWOOD EDGES.

22. FRAMING ANCHORS, POST CAPS, COLUMN BASES, HANGERS, ETC. SHALL BE MANUFACTURED BY SIMPSON, OR APPROVED EQUAL.

23. PROVIDE 2X MINIMUM BACKING FOR ALL WALL HUNG CABINETS, HANDRAILS, SHELVING, LIGHT FIXTURES, ACCESSORIES, ETC.

24. PRESSURE TREATED DOUGLAS FIR SHALL BE NO. 2 MINIMUM AND BEAR "A.W.P.B." QUALITY MARK AND THE W.C.L.N.G. GRADE STAMP. CERTIFICATES ARE NOT ACCEPTABLE.

25. CUTS AND HOLES IN PRESSURE TREATED LUMBER SHALL BE TREATED PER A.W.P.A. M−84.

H. PREMANUFACTURED ROOF TRUSSES

1. TRUSS DRAWINGS, CALCULATIONS AND THE LATEST ICBO APPROVED TEST DATA FOR TRUSS METAL PLATE CONNECTORS SHALL BE SUBMITTED TO THE ARCHITECT AND/OR ENGINEER FOR REVIEW PRIOR TO FABRICATION. CALCULATIONS FOR GIRDER TRUSSES SHALL INCLUDE POINT LOADS FROM CARRIED TRUSS REACTIONS.

2. CALCULATIONS AND SHOP DRAWINGS SHALL BE SIGNED BY A CALIFORNIA REGISTERED CIVIL OR STRUCTURAL ENGINEER. IT SHALL BE THE RESPONSIBILITY OF THE MANUFACTURER TO OBTAIN APPROVALS OF FINAL CALCULATIONS AND SHOP DRAWINGS PRIOR TO FABRICATION.

3. TRUSSES SHALL BE DESIGNED IN ACCORDANCE WITH THE LATEST LOCAL APPROVED BUILDING CODES AND ORDINANCES FOR ALL LOADS IMPOSED, INCLUDING LATERAL LOADS. FABRICATOR SHALL REVIEW ALL DRAWINGS AND MEET PROFILES AS INDICATED.

4. THE MANUFACTURER SHALL BE RESPONSIBLE FOR THE DESIGN OF MEMBERS USED AS DRAG OR CHORD MEMBERS AND SHALL INSURE THAT SUCH MEMBERS ARE PLACED AS REQUIRED ON THE FRAMING PLANS. THE AMOUNT OF LOAD TO BE LATERALLY TRANSMITTED BY THE MEMBER SHALL BE A MINIMUM OF 2000 POUNDS U.O.N. ON THE FRAMING PLANS.

5. ROOF TRUSS DESIGN LOADS

	DEAD LOAD	LIVE LOAD
TOP CHORD	17 PSF	16 PSF (REDUCIBLE)
BOTTOM CHORD	5 PSF	10 PSF (NON−CONCURRENT

•DESIGN ROOF TRUSSES TO SUPPORT A 500LB. CONCENTRATED LOAD AT ANY TOP CHORD PANEL

6. MAXIMUM FLOOR AND ROOF DEFLECTIONS:

	MAXIMUM DEFLECTIONS		
LOCATION	LIVE LOAD	TOTAL	LOAD
ROOF	L/360	L/240	

7. INCREASES IN ALLOWABLE STRESSES FOR REPETITIVE MEMBERS, ARE NOT PERMISSIBLE.

8. PROVIDE ADEQUATE CAMBER FOR DESIGNATED DESIGN LOADS.

9. TRUSS DESIGNER SHALL OVERSIZE PLATES FOR CHORD MEMBERS TO ACCOUNT FOR WOOD DEFECTS LIKE KNOTS, KNOT HOLES AND GREATLY DISTORTED GRAINS. MAXIMUM ALLOWABLE DEFECT SIZE PER MEMBER SHALL BE 2 SQUARE INCHES. NO DEFECTS ALLOWED UNDER PLATES FOR WEB MEMBERS.

10. TRUSS MANUFACTURER TO VERIFY ALL DIMENSIONS SHOWN ON STRUCTURAL DRAWINGS WITH ARCHITECTURAL DRAWINGS AND IN FIELD WITH WALL LAYOUT PRIOR TO FABRICATION. PROVIDE SHOP DRAWINGS WHICH SHALL INCLUDE PLAN DRAWING SHOWING TRUSS LOCATIONS AND TRUSS PROFILES, WITH DIMESIONS REVIEWED AND APPROVED BY GENERAL CONTRACTOR, PRIOR TO FABRICATION.

11. GABLE END TRUSSES SHALL HAVE 2X VERTICALS AT 16" O.C.TYPICAL UNLESS OTHERWISE NOTED.

12. SHOP DRAWINGS SHALL BE SUBMITTED TO THE ARCHITECT/ENGINEER FOR REVIEW PRIOR TO FABRICATION AND WILL INCLUDE THE FOLLOWING MINIMUM INFORMATION:
   a. PROJECT NAME AND LOCATION
   b. DESIGN LOADS, CONFIGURATIONS, (2 OR 3 POINT BEARING) AND SHEAR TRANSFER.
   c. MEMBER STRESSES, DEFLECTIONS, TYPE OF JOINT PLATES AND ALLOWABLE DESIGN VALUES. TRUSS JOINTS SHALL BE DESIGNED FOR 125% OF THE DESIGN STRESSES.
   d. TYPE, SIZE, AND LOCATION OF HANGERS TO BE USED FOR THE PROJECT. HANGERS SHALL BE DESIGNED TO SUPPORT THE FULL VERTICAL LOAD AND A LATERAL LOAD EQUAL TO 20% OF THE VERTICAL REACTION. ALL CONNECTORS SHALL BE ICBO APPROVED AND OF ADEQUATE STRENGTH TO RESIST STRESSES DUE TO THE LOADING INVOLVED.

13. ALL HARDWARE REQUIRED FOR CONNECTING TRUSSES (JACK TO HIP, HIP TO GIRDER OR GIRDER TO GIRDER, ETC.) SHALL BE DESIGNED, DETAILED AND PROVIDED BY TRUSS FABRICATOR.

14. THE TRUSS MANUFACTURER SHALL BE RESPONSIBLE FOR ALL TRUSS TO TRUSS CONNECTIONS. EACH TRUSS SHALL BE LEGIBLY MARKED WITH THE FOLLOWING INFORMATION WITHIN TWO FEET OF THE CENTER OF THE SPAN ON THE FACE OF THE BOTTOM OF THE CHORD:
   1. MANUFACTURER'S NAME
   2. DESIGN LOADS
   3. TRUSS SPACING

15. MULTIPLE CHORDS SHALL BE FACTORY LAMINATED.

16. CROSS BRIDGING AND/OR BRACING SHALL BE PROVIDED FOR, AND DETAILED BY, THE MANUFACTURER AS REQUIRED TO ADEQUATELY BRACE TRUSSES.

17. WHERE TRUSSES BLOCKING IS CALLED OUT, THE BLOCKING PIECE SHALL BE THE SAME DEPTH AS THE ADJOINING MEMBERS AND CAPABLE OF RESISTING A LATERAL LOAD EQUAL TO 500 POUNDS IN ITS PLANE, OR BE SHEATHED SOLID WITH 1/2" CDX PLYWOOD AND NAILED WITH 10d COMMON NAILS AT 6" (EN) U.O.N. ON THE FRAMING PLANS.

18. GENERAL CONTRATOR TO PROVIDE TEMPORARY ERECTION BRACING AND WEB BRACING AS REQUIRED BY TRUSS MANUFACTURER'S DESIGN.

SPECIAL INSPECTION

Summary of Special Inspection

No.	Description of Type of Inspection Required, Location, Remarks, etc.	Design Strength
1	EPOXY ANCHORS FOR CONCRETE [INCLUDING ICC REPORT NUMBER, ESR-2508]	f'C= 2,500 psi

"NOTICE OF THE APPLICANT /OWNER'S AGENT/ARCHITECT OR ENGINEER OF RECORD: BY USING THIS PERMITTED CONSTRUCTION DRAWINGS FOR CONSTRUCTION/ INSTALLATION OF THE WORK SPECIFIED HEREIN, YOU AGREE TO COMPLY TO THE REQUIREMENT OF NATIONAL CITY FOR SPECIAL INSPECTION, STRUCTURAL OBSERVATION, CONSTRUCTION MATERIAL TESTING AND OFF−SITE FABRICATION OF BUILDING COMPONENTS, CONTAINED IN THE STATEMENT OF SPECIAL INSPECTION AND, AS REQUIRED BY THE CALIFORNIA CONSTRUCTION CODE"

"NOTICE TO THE CONTRACTOR/BUILDER/INSTALLER/SUB−CONTRACTORS/ OWNER−BUILDER, BY USING THIS PERMITTED CONSTRUCTION DRAWINGS FOR CONSTRUCTION/INSTALLATION OF THE WORK SPECIFIED HEREIN, YOU ACKNOWLEDGE AND ARE AWARE OF THE REQUIREMENTS CONTAINED IN THE STATEMENT OF SPECIAL INSPECTION. YOU AGREE TO COMPLY WITH REQUIREMENTS OF NATIONAL CITY FOR SPECIAL INSPECTIONS, STRUCTURAL OBSERVATION, CONSTRUCTION MATERIAL TESTING AND OFF−SITE FABRICATION OF BUILDING COMPONENTS, CONTAINED IN THE STATEMENT OF SPECIAL INSPECTION AND, AS REQUIRED BY THE CALIFORNIA CONSTRUCTION CODES.

"THE SPECIAL INSPECTOR MUST BE CERTIFIED BY THE CITY OF NATIONAL CITY, DEVELOPMENT SERVICES, IN THE CATEGORY OF WORK REQUIRED TO HAVE SPECIAL INSPECTION."

"THE CONSTRUCTION MATERIALS TESTING LABORATORY MUST BE APPROVED BY THE CITY OF NATIONAL CITY, DEVELOPMENT SERVICES, FOR TESTING OF MATERIALS, SYSTEMS, COMPONENTS AND EQUIPMENTS."

"FABRICATOR MUST BE APPROVED BY THE CITY OF NATIONAL CITY, DEVELOPMENT SERVICES FOR THE FABRICATION OF MEMBERS AND ASSEMBLIES ON THE PREMISES OF THE FABRICATOR'S SHOP."

"FABRICATOR SHALL SUBMIT AN 'APPLICATION TO PERFORM OFF−SITE FABRICATION' TO THE INSPECTION SERVICES DIVISION FOR APPROVAL PRIOR TO COMMENCEMENT OF FABRICATION."

"FABRICATOR SHALL SUBMIT A 'CERTIFICATE OF COMPLIANCE FOR OFF−SITE FABRICATION' TO THE INSPECTION SERVICES DIVISION PRIOR TO ERECTION OF FABRICATED ITEMS AND ASSEMBLIES."

"THE SPECIAL INSPECTIONS IDENTIFIED ON PLANS ARE, IN ADDITION TO, AND NOT A SUBSTITUTE FOR, THOSE INSPECTIONS REQUIRED TO BE PERFORMED BY A CITY'S BUILDING INSPECTOR."

A-E-STUDIO.COM
SMART CONSTRUCTION
JUANNOE73@GMAIL.COM
466 THIRD AVE. STE B
CHULA VISTA, CA 91914
(619) 201-4652

Date February 17, 2023

REVISIONS

REGISTERED PROFESSIONAL ENGINEER
JUAN C. NOE
No. 72822
Expires 6/30/2024
CIVIL
STATE OF CALIFORNIA

ADDITION & NEW ADU
1523 E 14th ST, NATIONAL CITY, CALIFORNIA 91950

02-17-2023

STRUCTURAL NOTES

S1

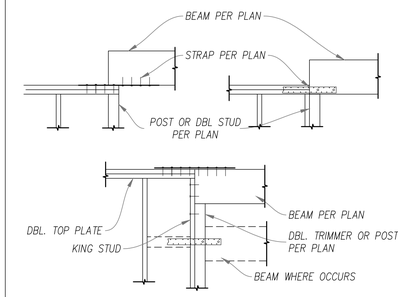

TYPICAL DRAG STRAPS TO BEAMS

10

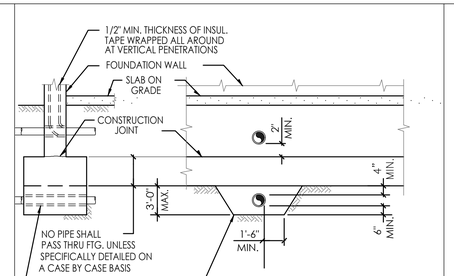

DETAIL OF PIPE SLEEVE
AT CONTINUOUS FOOTING.

6

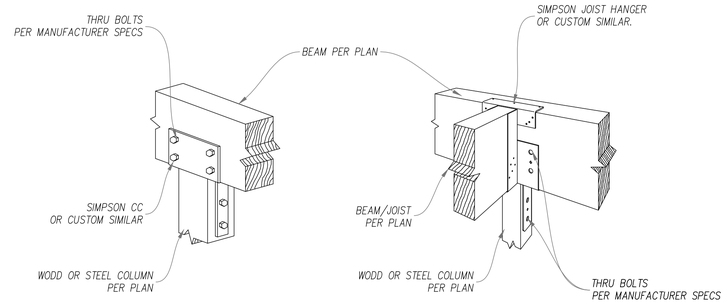

ALL BEAM TO COLUMN CONNECTIONS SHALL USE SIMPSON COLUMN CAPS CONNECTORS OR CUSTOM SIMILAR, PER DETAIL 3/S1.1

TYPICAL BEAM TO COLUMN CONNECTORS

3

TABLE 2304.9.1 FASTENING SCHEDULE

CONNECTION	FASTENING[a,m]	LOCATION
1. JOIST TO SILL OR GIRDER	3–8d COMMON (2 1/2"x0.131") or 3–3" x 0.131" NAILS 3–3" 14 GA. STAPLES	TOENAIL
2. BRIDGING TO JOIST	2–8d COMMON (2 1/2"x0.131") or 2–3" x 0.131" NAILS 2–3" 14 GA. STAPLES	TOENAIL AT EACH END
3. 1"x6" SUBFLOOR OR LESS TO EACH JOIST	2–8d COMMON (2 1/2"x0.131")	FACE NAIL
4. WIDER THAN 1"x6" SUBFLOOR TO EA. JOIST	3–8d COMMON (2 1/2"x0.131")	BLIND AND FACE NAIL
5. 2" SUBFLOOR TO JOIST OR GIRDER	2–16d COMMON (3 1/2"x0.162")	FACE NAIL
6. SOLE PLATE TO JOIST OR BLOCKING	16d (3 1/2"x0.135") @ 16"o.c. 3" x 0.131" NAILS @ 8"o.c. 3" 14 GA. STAPLES @ 8"o.c.	TYPICAL FACE NAIL
SOLE PLATE TO JOIST OR BLOCKING, AT BRACED WALL PANEL	3–16d (3 1/2"x0.135") @ 16"; 4–3" x 0.131" NAILS @ 16"; 4–3" 14 GA. STAPLES PER 16"	BRACED WALL PANELS
7. TOP PLATE TO STUD	2–16d COMMON (3 1/2"x0.162") 3–3" x 0.131" NAILS 3–3" 14 GA. STAPLES	END NAIL
8. STUD TO SOLE PLATE	4–8d COMMON (2 1/2"x0.131") 4–3" x 0.131" NAILS 3–3" 14 GA. STAPLES	TOENAIL
	2–16d (3 1/2"x0.162") 3–3" x 0.131" NAILS 3–3" 14 GA. STAPLES	END NAIL
9. DOUBLE STUDS	16d (3 1/2"x0.135") @ 24"o.c. 3" x 0.131" NAIL @ 8"o.c. 3" 14 GA. STAPLE @ 8"o.c.	FACE NAIL
10. DOUBLE TOP PLATES	16d (3 1/2"x0.135") @ 16"o.c. 3" x 0.131" NAIL @ 12"o.c. 3" 14 GA. STAPLE @ 12"o.c.	TYPICAL FACE NAIL
DOUBLE TOP PLATES	8–16d COMMON (3 1/2"x0.162") 12–3" x 0.131" NAILS 12–3" 14 GA. STAPLES	LAP SPLICE
11. BLOCKING BETWEEN JOISTS OR RAFTERS TO TOP PLATE	3–8d COMMON (2 1/2"x0.131") 3–3" x 0.131" NAILS 3–3" 14 GA. STAPLES	TOENAIL
12. RIM JOIST TO TOP PLATE	8d (2 1/2"x0.131") @ 16"o.c. 3" x 0.131" NAILS 3" 14 GA. STAPLES	TOENAIL
13. TOP PLATES, LAPS AND INTERSECTIONS	2–16d (3 1/2"x0.162") 3–3" x 0.131" NAILS 3–3" 14 GA. STAPLES	FACE NAIL
14. CONTINUOUS HEADER, TWO PIECES	16d COMMON (3 1/2"x0.162")	16"o.c. ALONG EDGE
15. CEILING JOISTS TO PLATE	3–8d (2 1/2"x0.131") 5–3" x 0.131" NAILS 5–3" 14 GA. STAPLES	TOENAIL
16. CONTINUOUS HEADER TO STUD	4–8d COMMON (2 1/2"x0.131")	TOENAIL
17. CEILING JOISTS, LAPS OVER PARTITIONS (see SECTION 2308.10.4.1, TABLE 2308.10.4.1)	3–16d (3 1/2"x0.162") MIN. 4–3" x 0.131" NAILS 4–3" 14 GA. STAPLES	FACE NAIL
18. CEILING JOISTS TO PARALLEL (see SECTION 2308.10.4.1, TABLE 2308.10.4.1)	3–16d (3 1/2"x0.162") MIN. 4–3" x 0.131" NAILS 4–3" 14 GA. STAPLES	FACE NAIL
19. RAFTER TO PLATE (see SECTION 2308.10.1, TABLE 2308.10.1)	3–8d COMMON (2 1/2"x0.131") 3–3" x 0.131" NAILS 3–3" 14 GA. STAPLES	TOENAIL
20. 1" DIAGONAL BRACE TO EACH STUD AND PLATE	2–8d COMMON (2 1/2"x0.131") 2–3" x 0.131" NAILS 2–3" 14 GA. STAPLES	FACE NAIL
21. 1" x 8" SHEATHING TO EACH BEARING	3–8d COMMON (2 1/2"x0.131")	FACE NAIL
22. WIDER THAN 1" x 8" SHEATHING TO EACH BEARING	3–8d COMMON (2 1/2"x0.131")	FACE NAIL
23. BUILT–UP CORNER STUDS	16d COMMON (3 1/2"x0.162") 3" x 0.131" NAILS 3–3" 14 GA. STAPLES	24"o.c. FACE NAIL 16"o.c.
24. BUILT–UP GIRDER & BEAMS	20d (4"x0.192") @ 32"o.c. 3" x 0.131" NAIL @ 24"o.c. 3" 14 GA. STAPLE @ 24"o.c.	FACE NAIL AT TOP & BOTTOM STAGGED ON OPPOS. SIDES
	2–20d COMMON (4"x0.192") 3–3" x 0.131" NAILS 3–3" 14 GA. STAPLES	FACE NAIL AT ENDS & AT EACH SPLICE
25. 2" PLANKS	16d COMMON (3 1/2"x0.162")	AT EACH BEARING
26. COLLAR TIE TO RAFTER	3–10d COMMON (3"x0.148") 4–3" x 0.131" NAILS 4–3" 14 GA. STAPLES	FACE NAIL
27. JACK RAFTER TO HIP	3–10d (3"x0.148") 4–3" x 0.131" NAILS 4–3" 14 GA. STAPLES	TOENAIL
	2–16d COMMON (3 1/2"x0.162") 3–3" x 0.131" NAILS 3–3" 14 GA. STAPLES	FACE NAIL
28. ROOF RAFTER TO 2–BY	20d (4"x0.192") @ 32"o.c. 3" x 0.131" NAIL @ 24"o.c. 3–14 GA. STAPLE @ 24"o.c.	TOENAIL
	2–20d COMMON (4"x0.192") 3–3" x 0.131" NAILS 3–3" 14 GA. STAPLES	FACE NAIL
29. JOIST TO BAND JOIST	3–16d COMMON (3"x0.162") 4–3" x 0.131" NAILS 4–3" 14 GA. STAPLES	FACE NAIL
30. LEDGER STRIP	3–16d COMMON (3"x0.162") 4–3" x 0.131" NAILS 4–3" 14 GA. STAPLES	FACE NAIL
31. WOOD STRUCTURAL PANELS & PARTICLE BOARD SUBFLOOR, ROOF AND WALL SHEATHING (TO FRAMING)	1/2" & LESS	6d[e,i] 2 3/8"x0.113" NAIL[f] 1 3/4" 16 GA[o]
	19/32" TO 3/4"	8d[d] OR 6d[e] 2 3/8"x0.113" NAILP 2" 16 GA[p]
	7/8" TO 1"	8d[c]
	1 1/8" TO 1 1/4"	10d[d] OR 8d[e]
SINGLE FLOOR (COMBINATION SUBFLOOR–UNDERLAYMENT TO FRAMING)	3/4" TO LESS	6d[e]
	7/8" TO 1"	8d[e]
	1 1/8" TO 1 1/4"	10d[d] OR 8d[e]
32. PANEL SIDING (TO FRAMING)	1/2" & LESS	6d[f]
	5/8"	8d[f]
33. FIBERBOARD SHEATHING	1/2"	No. 11 GA. ROOFING NAIL[h] 6d COMMON NAIL (2"x0.113") No. 16 GA. STAPLE[i]
	25/32"	No. 11 GA. ROOFING NAIL[h] 8d COMMON NAIL (2 1/2"x0.131") No. 16 GA. STAPLE[i]
32. INTERIOR PANELING	1/4"	4d[j]
	3/8"	6d[k]

For SI 1inch=25.4mm.
a). Common or box nails are permitted to be used except where otherwise stated.
b). Nails spaced at 6 inches on center at the edges, 12 inches at intermediate supports except 6 inches at supports where spans are 48 inches or more. For nailing of wood structural panel and particleboard diaphragms and shear walls, refer to Section 2305. Nails for wall sheathing are permitted to be common, box or casing.
c). Common or deformed shank (6d–2"x0.113"; 8d–2⅜"x0.131"; 10d–3"x0.148").
d). Common (6d–2"x0.113"; 8d–2⅜"x0.131"; 10d–3"x0.148").
e). Deformed shank (6d–2"x0.113"; 8d–2⅜"x0.131"; 10d–3"x0.148").
f). Corrosion–resistant siding (6d–2"x0.113"; 8d–2⅜"x0.131"; 10d–3"x0.148").
g). Fasteners spaced 3 inches on center at exterior edges and 6 inches on center at intermidiate supports, when used as structural sheathing. Spacing shall be 6 inches on center on the edges and 12 inches at intermidiate supports for non structural applications.
h). Corrosion–resistant roofing nails with 7/16 inch diameter head and 1½ inch lenght for ½ inch sheathing and 1¾ inch lenght for 29/32 inch sheathing.
i). Corrosion–resistant staples with nominal 7/16 inch crown and 1⅜ inch lenght for ½ inch sheathing and 1½ inch lenght for 29/32 inch sheathing.
j). Casing (1½"x0.080") or finish (1½"x0.072") nails spaced 6 inches on panel edges, 12 inches at intermidiate supports.
k). Panel supports at 24 inches. Casing or finish nails spaced 6 inches on panel edges, 12 inches at intermidiate supports.
l). For roof sheathing applications, 8d nails (2½"x0.113") are the minimum required for wood structural panels.
m). Staples shall have a minimum crown width of 7/16 inch.
n). For roof sheathing applications, fasteners spaced 4 inches on center at edges, 8 inches at intermidiate supports.
o). Fasteners spaced 4 inches on center at the edges, 8 inches at intermidiate supports for subfloor and wall sheathing and 3 inches on center at edges, 6 inches at intermidiate supports for roof sheathing.
p). Fasteners spaced 4 inches on center at edges, 8 inches at intermidiate supports.

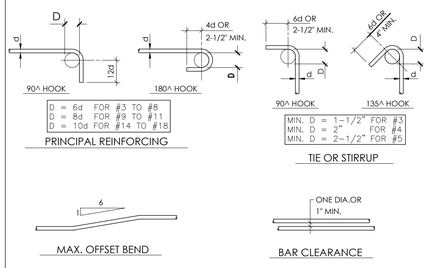

PRINCIPAL REINFORCING

TIE OR STIRRUP

MAX. OFFSET BEND

BAR CLEARANCE

NOTE: ALL BENDS SHALL BE MADE COLD

BAR BENDS

11

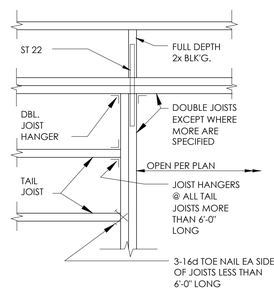

TYP JOIST SUPPORT AT OPENING

7

SHEAR WALL SCHEDULE

MARKS	SHEATHING MATERIAL (INDEX)	ALLOW. LOAD	MIN. FRAMING W/E.N. STUDS	DBL TOP >	EDGE NAIL (E.N.)	FIELD NAIL (F.N.)	SILL >	ANCHOR BOLT 7,8,9	SILL NAILING	SIMPSON SCREWS AT BLOCKING	SHEAR TRANSFER NAILING
▷	3/8 STRUCT I (24/0)	276	2x	2x + 2x	10d @ 6"	10d @ 12"	2x	5/8"~ A.B. x 12" @ 32"O.C.	16d @ 6"	1/4"~ SDS @ 16" x 6" LONG	A35 @ 16" O.C.
6	1/2 STRUCT I (24/0)	340	2x	2x + 2x	10d @ 6"	10d @ 12"	2x	5/8"~ A.B. x 12" @ 32"O.C.	16d @ 6"	1/4"~ SDS @ 16" x 6" LONG	A35 @ 16" O.C.
▷	3/8 STRUCT I (24/0)	432	3x	2x + 2x	10d @ 4"	10d @ 12"	2x 3x	5/8"~ A.B. x 12" @ 16"O.C. 5/8"~ A.B. x 12" @ 32"O.C.	20d @ 4" AT 3X 16d @ 4" AT PLYWD >	1/4"~ SDS @ 9" x 6" LONG	A35 @ 12" O.C.
▷	3/8 STRUCT I (24/0)	552	3x	2x + 2x STAGG.	10d @ 3"	10d @ 12"	2x 3x	5/8"~ A.B. x 12" @ 16"O.C. 5/8"~ A.B. x 12" @ 32"O.C.	20d @ 3" AT 3X 16d @ 3" AT PLYWD >	1/4"~ SDS @ 7" x 6" LONG	A35 @ 8" O.C.
▷	3/8 STRUCT I (24/0)	732	3x	2x + 2x STAGG.	10d @ 2"	10d @ 12"	3x	5/8"~ A.B. x 12" @ 16"O.C.	20d @ 2" AT 3X 16d @ 2" AT PLYWD >	1/4"~ SDS @ 6" x 6" LONG	A35 @ 6" O.C.
2	1/2 STRUCT I (24/0)	870	3x	2x + 2x	10d @ 2"	10d @ 12"	3x	5/8" ~ A.B. x 12" @ 16"O.C.	20d @ 2" AT 3X 16d @ 2" AT PLYWD >	1/4"~ SDS @ 5" x 6" LONG	A35 @ 6" O.C.
▷ ▷	3/8 STRUCT I (24/0)	864	3x	——	8d @ 4"	8d @ 12"	4x	5/8"~ A.B. x 12" @ 16"O.C.	20d @ 2" AT 3X 16d @ 2" AT PLYWD >	1/4"~ SDS @ 4" x 6" LONG	A35 @ 6" O.C.
▷ ▷	3/8 STRUCT I (24/0)	1104	4x	——	8d @ 3"	8d @ 12"	4x	5/8" ~ A.B. x 12" @ 12"O.C.	20d @ 2" AT 3X 16d @ 2" AT PLYWD >	1/4"~ SDS @ 4" x 6" LONG	A35 @ 5" O.C.
▷▷	INDICATES HF13x18 1–,"HARDYWALL PER ICBO PFC-5342								SEE SHEET H1 FOR MANUFACTURE SPECIFICATIONS		

NOTES:

1. FIELD NAILS @ 12" o.c. ALL PANEL EDGE'S BLK'ED
2. ALL NAILING TO BE WITH COMMON NAILS.
3. 3 ANCHOR BOLTS MIN. PER SHEAR WALL SILL PLATES. EXCEPT FOR SHEAR WALLS LESS OR EQUAL THAN 3'-0" PROVIDE 2 A.B. MIN. NOT INCLUDING HD ANCHOR
4. PROVIDE 3x BLK'G. 3x STUDS. FOR SHEAR WALL TYPE 3 2 & 2-4 AT PLWD EDGES. FOR PLYWOOD APPLIED ON TWO SIDES NAILS MUST BE STAGGERED. PROVIDE DBL 2X > WITH STAGG. NAILING ON EACH > WHERE EDGE NAILING IS LESS THAN 3"
5. WHERE 3X PLATES ARE USED. USE 20d NAILS IN PRE-DRILLED HOLES IN LIEU OF 16d NAILS INDICATED PER SHEAR WALL SCHED.
6. PROVIDE 2-11/16" TIMBERSTRAND LSL RIM JOIST FOR SILL NAILING LESS THAN 3" OTHERWISE 1[" TIMBERSTRAND LSL RIM JOIST U.N.O
7. PROVIDE 3X300,229 HOT DIPPED GALVANIZED WASHER PLATE AT ALL ANCHOR BOLTS. THE HOLE IN THE PLATE WASHER IS PERMITTED TO BE DIAGONALLY SLOTTED WITH A WIDTH OF UP TO 3/16 INCH.(4.76 mm) LARGER THAN THE BOLT DIAMETER AND A SLOT LENGHT NOT TO EXCEED 1 [INCH.(44 mm). PROVIDED A STANDARD CUT WASHER IS PLACED BETWEEN THE PLATE WASHER AND THE NUT.

4

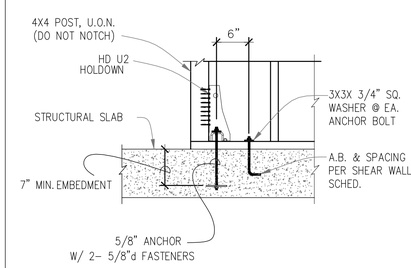

12

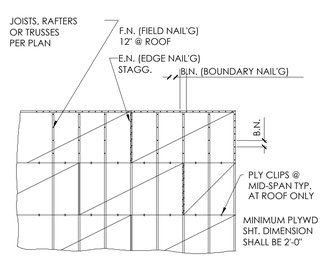

TYP. DIAPHRAGM NAILING

8

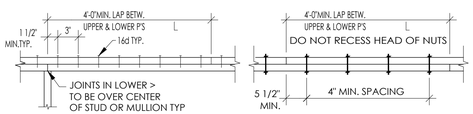

NUMBER OF NAILS OR BOLTS LISTED BELOW SHALL BE USED EACH SIDE OF EACH UPPER & LOWER > JOINT

SPL	NAILING	LOAD(lbs)	SPL (3)	NAILING	LOAD(lbs)	SPL	BOLTING	LOAD(lbs)
A	8-16d	1138	F	20-16d	2846	K	2-5/8" M.B.	1570
B	10-16d	1423	G	24-16d	3414 (1)	L	3-5/8" M.B.	2350
C	12-16d	1707	H	28-16d	3984 (1)	M	2-3/4" M.B.	1889
D	14-16d	1992	I	32-16d	4552 (1)	N	3-3/4" M.B.	2833
E	16-16d	2276	J	36-16d	5122 (1)	O	4-3/4" M.B.	3777

NOTE: MIN. SPLICE 16d @ 12"o.c. U.N.O

(1)REQUIRES #2 GRADE 2X4 TOP P'S MIN. L
(2)REQUIRES #1 GRADE 2X4 TOP P'S MIN. L
(3)REQUIRES GREATER THAN 4'-0" LAP SPLICES

TYP. DOUBLE TOP PLATE SPLICE

5

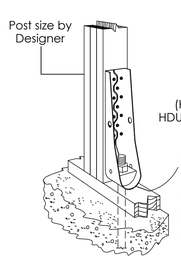

13

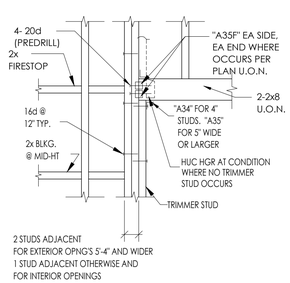

TYP. HEADER FRAMING

9

TIEDOWN SCHEDULE

MARK	SIZE	"L" MIN.	TIEDOWN ANCHOR	BOLTS TO EA. POST	NAILING TO EACH POST	NAILING TO FACE	HOLDOWN POST (MIN.)	CAPACITY (LBS)
S-1	MST37	11"	-	-	11-16d	-	4 x 4	2100
S-2	MST48	16"	-	-	17-16d	-	4 x 4	3330
S-3	MSTC48B3	21"	-	-	38-10d	12-10d	4 x 4	3930
S-4	MSTC66B3	21"	-	-	38-10d	14-10d	4 x 4	4440
S-5	MST60	22"	-	-	24-16d	-	4 x 4	4990
S-6	HD-2A	-	5/8"~	2-5/8"~	-	-	4 x 4	2775
S-7	HD-5A	-	3/4"~	2-3/4"~	-	-	4 x 4	4010
S-8	HD-6A	-	7/8"~	2-7/8"~	-	-	4 x 4	5100
S-9	MST72	27	-	-	28-16d	-	4 x 6	5800
S-10	CMST12	45	-	-	50-16d	-	4 x 6	9640
S-11	2-MST72	27	-	-	28-16d EA. STRAP	-	6 x 8	11080
S-12	2-MST60	22"	-	-	24-16d EA. STRAP	-	6 x 8	9930

NOTE:
1. DBL MST72 SHALL BE INSTALLED SIDE BY SIDE WITH A 3/8" GAP BTWEEN THEM.

TIE-DOWN SCHEDULE

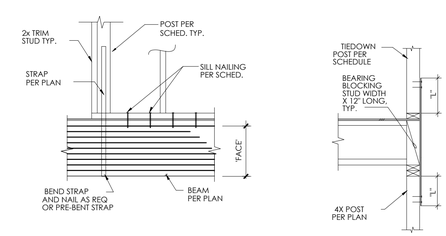

TIE-DOWN BETWEEN WALL AND FLOOR BEAM

2

A-E-STUDIO.COM
SMART CONSTRUCTION
JUANNDET2@GMAIL.COM
466 THIRD AVE. STE B
CHULA VISTA, CA 91914
(619) 201-4652

Date February 17, 2023

REVISIONS

REGISTERED PROFESSIONAL ENGINEER
JUAN DET
No. 72822
Expires 6/30/2024
CIVIL
STATE OF CALIFORNIA

ADDITION & NEW ADU
1523 E 14th ST, NATIONAL CITY, CALIFORNIA 91950

02-17-2023

TYPICAL DETAILS

S1.1

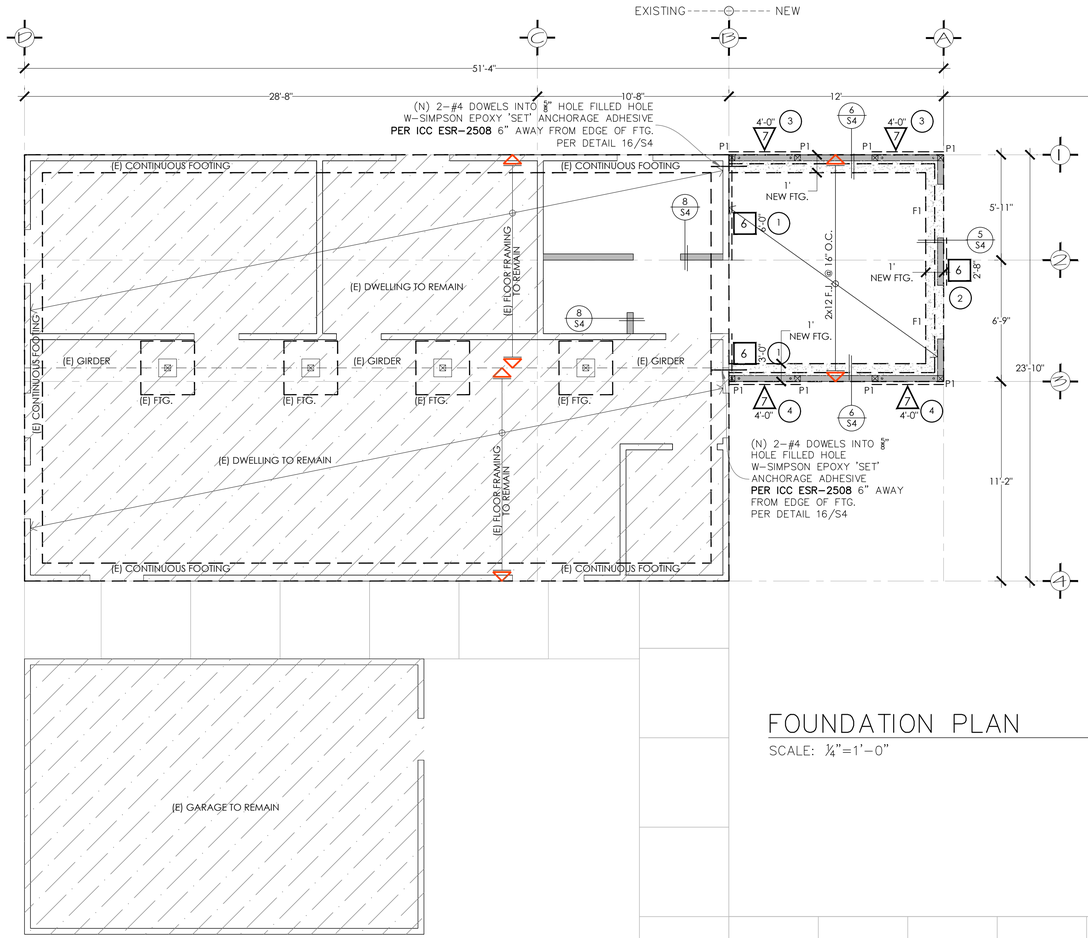

FOUNDATION PLAN

SCALE: ¼"=1'-0"

KEY LEGEND	
CONT. FTG.	12" X 18" / 2 #4 T. & B.
F1	24"X48"X12" / #4 @ 12" O.C. E.W.
P1	4"X4" WOOD POST / W/HDU2

ALL BEAM TO COLUMN CONNECTIONS SHALL USE SIMPSON COLUMN CAPS CONNECTORS OR CUSTOM SIMILAR, PER DETAIL 3/S1.1

WALLS LEGEND	
	PROPOSED WOOD-FRAMED WALLS USING 2X4 STUDS @ 16"O.C. MAX. 8'-0" HIGH PER CRC SECTION R602.3.1
	EXISTING WOOD-FRAMED WALLS TO REMAIN THE SAME.

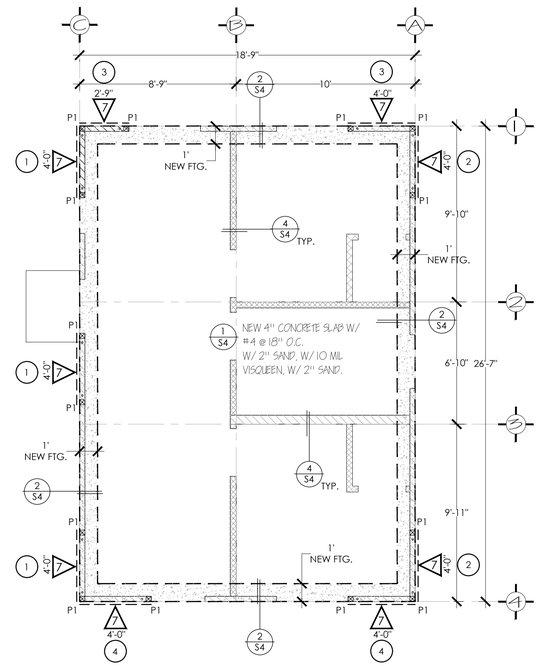

FOUNDATION PLAN ADU

SCALE: ¼"=1'-0"

FOUNDATION NOTES:

1. REFER TO SHEETS S1 FOR GENERAL NOTES & STANDARD DETAILS. THESE NOTES & DETAILS SHALL BE USED WHERE APPLICABLE WHETHER SPECIFICALLY REFERENCED OR NOT.
2. REFER TO ARCHITECTURAL DRAWINGS FOR THE FOLLOWING:
   A. ALL DIMENSIONS NOT SHOWN.
   B. ALL OPENINGS NOT SHOWN.
   C. ALL NON-BEARING WALL NOT SHOWN.
3. EXTERIOR WALLS ARE 2x4 AT 16" O.C AND 2X6's @ 16" O.C. AT STAIRS
4. a) THE STRUCTURE WILL BE LOCATED ON NATIVE/UNDISTURBED

   SOIL SIGNATURE _____ LICENSED ENGINEER

   b) IF THE BUILDING INSPECTOR SUSPECTS FILL, EXPANSIVE SOIL OR ANY GEOLOGIC INSTABILITY BASED UPON OBSERVATION OF THE FOUNDATION EXCAVATION, A SOILS OR GEOLOGICAL REPORT, AND RESUBMIT OF PLANS TO PLAN CHECK TO VERIFY THAT THE REPORT RECOMMENDATIONS HAVE BEEN INCORPORATED, MAY BE REQUIRED.
5. PROVIDE A MIN. OF 2 BOLTS PER PIECE OF SILL OR WOOD PLATE. ONE BOLT SHALL BE LOCATED NOT MORE THAN 12" OR LESS THAN 7 BOLT DIAMETER FROM EA. END OF THE PIECE OF SILL OR WOOD PLATES. BOLTS SHALL BE INSTALLED W/ PROPERLY TIGHTENED NUTS & WASHERS
6. PROVIDE STEEL WASHERS OF MIN. 3" X 3" X 1/4" THICKNESS AT EACH WOOD PLATE OR SILL BOLT.

5' 4 SHEAR-WALL PER SCHEDULE ON S1.1 SHEET

* ANY DIFFERENCES BETWEEN PLANS AND REAL DIMENSIONS OR MATERIALS SHALL BE REPORTED IMMEDIATELY TO THE STRUCTURAL ENGINEER.

FASTENERS IN PRESERVATIVE-TREATED WOOD AND FIRE-RETARDANT WOOD SHALL BE HOT DIPPED ZINC-COATED GALVANIZED STEEL, STAINLESS STEEL, SILICON BRONZE OR COPPER.

A-E-STUDIO.COM
SMART CONSTRUCTION
JUANNICE73@GMAIL.COM
466 THIRD AVE. STE B
CHULA VISTA, CA 91914
(619) 201-4652

Date February 17, 2023

REVISIONS

REGISTERED PROFESSIONAL ENGINEER JUAN C. PIRE No. 72822 Expires 6/30/2024 CIVIL STATE OF CALIFORNIA

ADDITION & NEW ADU
1523 E 14th ST, NATIONAL CITY, CALIFORNIA 91950

02-17-2023

FOUNDATION PLAN

S2

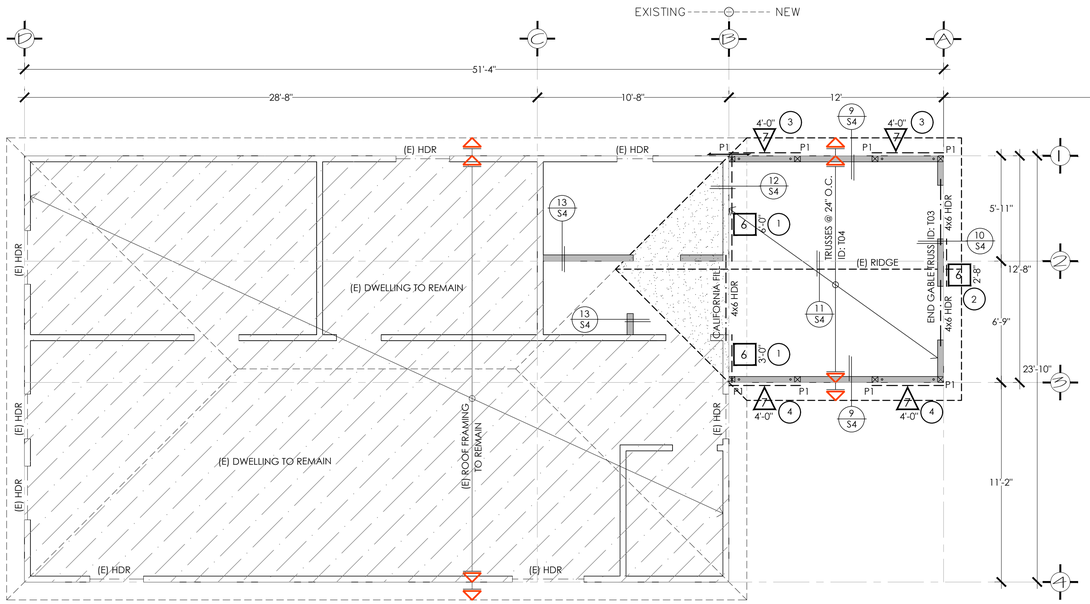

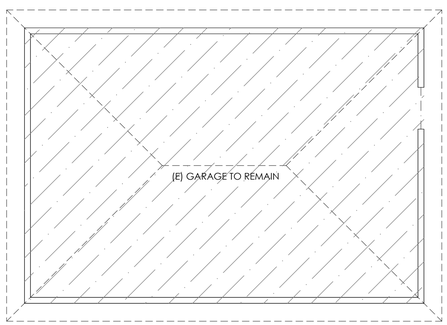

ROOF FRAMING PLAN

SCALE: ¼"=1'-0"

TYP. ROOF DIAPH.
1/2" PLYWD. INDEX (32/16) 10d @ 4" E.N. & B.N. 10d @ 12" F.N.

"DIAPHRAGM SHEATHING NAILS OR OTHER APPROVED SHEATHING CONNECTORS SHALL BE DRIVEN SO THAT THEIR HEAD OR CROWN IS FLUSH W/ THE SURFACE OF THE SHEATHING"

KEY LEGEND	
P1	4"X4" WOOD POST
HDR-01	4X6 HDR
HDR-02	4X8 HDR
HDR-03	4 x 12 BM

ALL BEAM TO COLUMN CONNECTIONS SHALL USE SIMPSON COLUMN CAPS CONNECTORS OR CUSTOM SIMILAR, PER DETAIL 3/S1.1

WALLS LEGEND	
	PROPOSED WOOD-FRAMED WALLS USING 2X4 STUDS @ 16"O.C. MAX. 8'-0" HIGH PER CRC SECTION R602.3.1
	EXISTING WOOD-FRAMED WALLS TO REMAIN THE SAME.

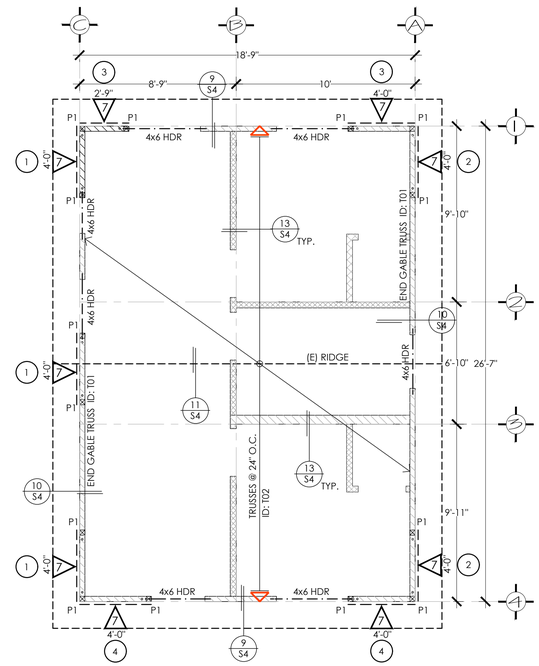

ROOF FRAMING PLAN ADU

SCALE: ¼"=1'-0"

FRAMING NOTES:

1. REFER TO SHEETS S1.1 FOR GENERAL NOTES & STANDARD DETAILS. THESE NOTES & DETAILS SHALL BE USED WHERE APPLICABLE WHETHER SPECIFICALLY REFERENCED OR NOT.
2. REFER TO ARCHITECTURAL DRAWINGS FOR THE FOLLOWING:
   A. ALL DIMENSIONS NOT SHOWN.
   B. ALL OPENINGS NOT SHOWN.
   C. ALL NON-BEARING WALL NOT SHOWN.
3. STUDS= 2X4's @ 16" O.C. WOOD STUDS WHERE APPLICABLE
4. 7 / 3' / #2
   - INDICATES SHEAR WALL MARK FROM THIS LEVEL TO LEVEL ABOVE PER SHEAR WALL SCHEDULE ON S1 PROVIDE NON-SHEAR PLYWOOD ADJACENT TO SHEAR PANELS IN ORDER TO PROVIDE A FLUSH FINISH.
   - INDICATES SHEAR WALL PANEL APPROX. MIN. LENGTH IF NOT SHOWN, THEN PROVIDE PLYWOOD ON ENTIRE FACE.
   - INDICATES SHEAR WALL PANEL NUMBER PER STRUCTURAL CALCULATIONS
5. (B) INDICATES BEAM DIRECTLY BELOW JOISTS.
   (F) INDICATES BEAM FLUSH W/ JOISTS.
   (H) INDICATES HEADER.
   (L) INDICATES LINTEL.
6. FOR POSTS, POST TO BEAM CONNECTION SEE 10/S1.1 UNO
7. DO NOT CUT, NOTCH, DRILL, BORE, SHAVE, TAPER OR FOR ANY REASON MODIFY PRE-ENGINEERED/MANUFACTURED STRUCTURAL ELEMENTS SUCH AS GLUED-LAMINATED MEMBERS, PARALAMS, MICROLAMS, I-JOIST, LIGHT GAUGE METAL MEMBERS AND OTHER SIMILAR TIMBER OR STEEL PRODUCTS OR A LETTER OF CERTIFICATION FROM THE MANUFACTURE'S ENGINEER WITH DETAIL SIGNED AND STAMPED IS ISSUED AND AUTHORIZED BY THE PROJECT ENGINEER OF RECORD AND APPROVED BY THE CITY OF SAN DIEGO BUILDING OFFICIAL.

A-E-STUDIO.COM
SMART CONSTRUCTION
JUANNOE73@GMAIL.COM
466 THIRD AVE. STE B
CHULA VISTA, CA 91914
(619) 201-4652

Date February 17, 2023

REVISIONS

REGISTERED PROFESSIONAL ENGINEER
JUAN J. NOE
No. 72822
Expires 6/30/2024
CIVIL
STATE OF CALIFORNIA

ADDITION & NEW ADU
1523 E 14th ST, NATIONAL CITY, CALIFORNIA 91950

02-17-2023

ROOF FRAMING PLAN

S3

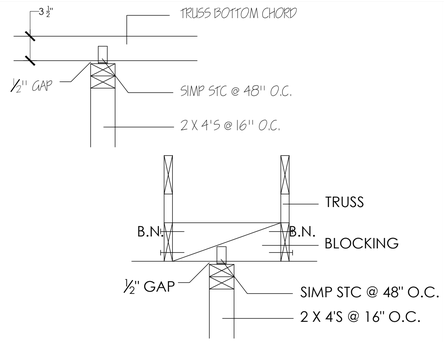

ALL INTERIOR NON BEARING WALLS TYP.

13

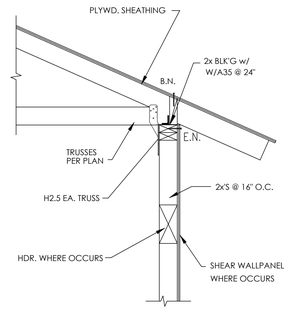

9

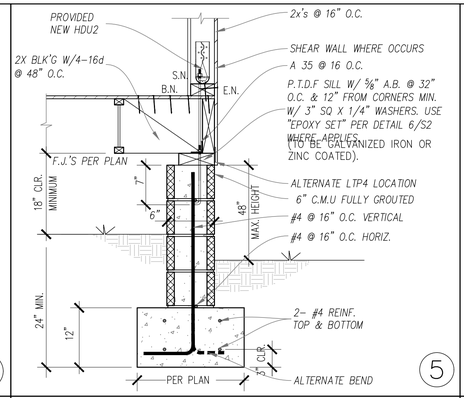

5

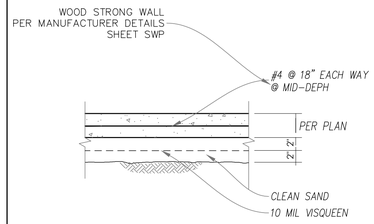

1

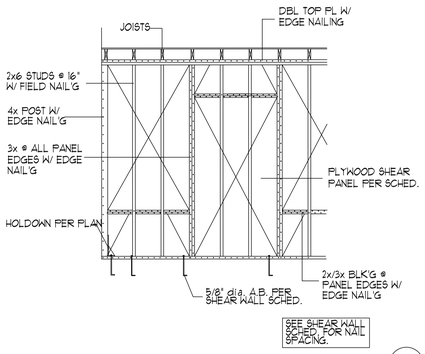

TYP. WALL FRAMING

14

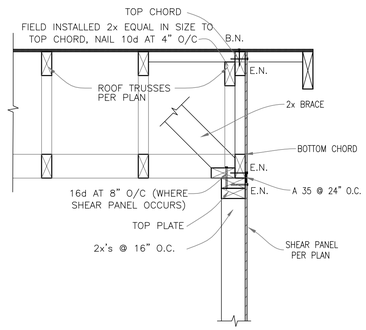

10

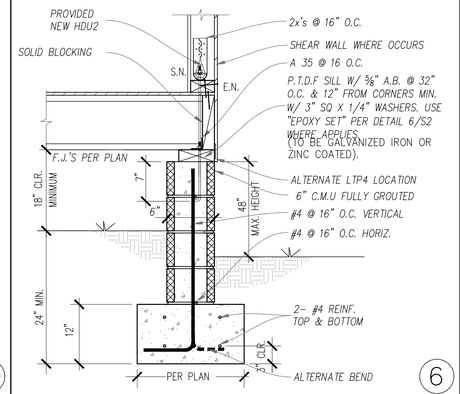

6

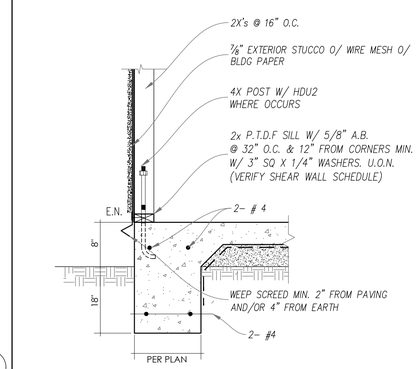

2

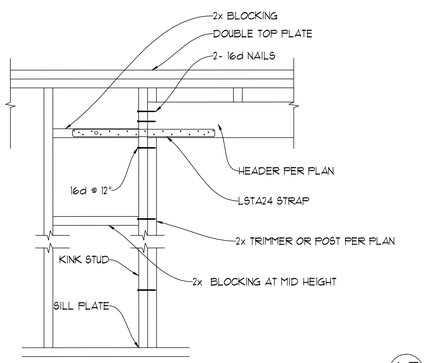

TYP. HEADER FRAMING

15

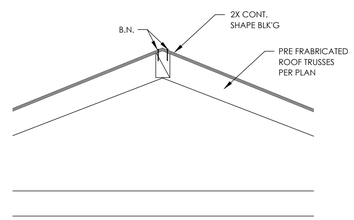

11

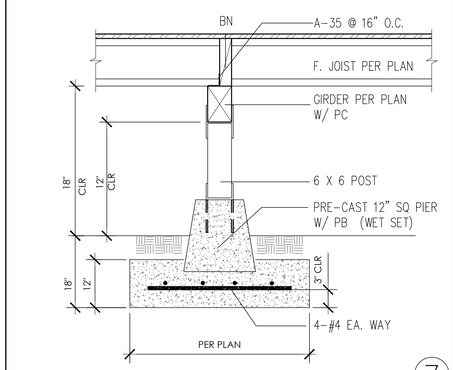

7

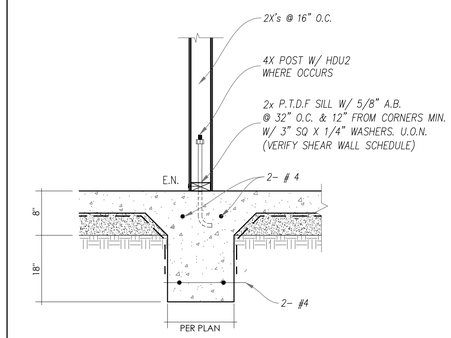

3

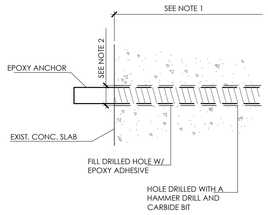

NOTES:

1. MIN. EMBEDMENT = 9 BAR DIA.
2. DRILLED HOLE DIA. = BAR DIA. + X
   X = 1/16" FOR 1/2" AND SMALLER
   X = 1/8" FOR 5/8" AND LARGER
3. MATERIALS AND INSTALLATION PROCEDURES SHALL CONFORM TO ICC EVALUATION SERVICE REPORT ESR-2508 (NO SUBSTITUTIONS PERMITTED).
4. INSTALLERS SHALL BE TRAINED BY THE MANUFACTURER'S REPRESENTATIVE.

16

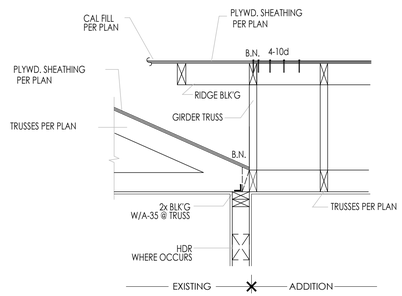

"PLYWOOD SHALL BE CONTINUOUS UNDER CALIFORNIA FILL"

12

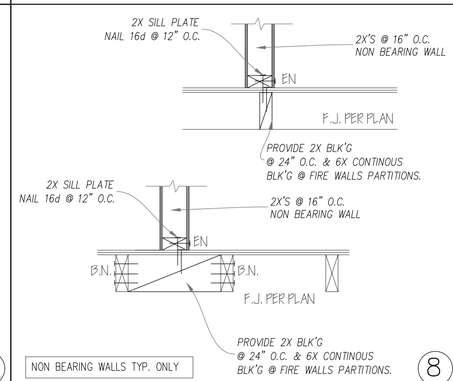

NON BEARING WALLS TYP. ONLY

8

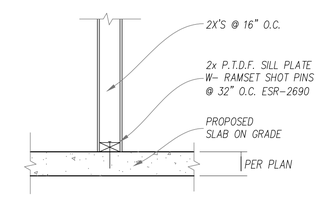

4

A-E-STUDIO.COM
SMART CONSTRUCTION
JUANNDE73@GMAIL.COM
466 THIRD AVE. STE B
CHULA VISTA, CA 91914
(619) 201-4652

Date February 17, 2023

REVISIONS

REGISTERED PROFESSIONAL ENGINEER
JUAN E. DE
No. 72822
Expires 6/30/2024
CIVIL
STATE OF CALIFORNIA

ADDITION & NEW ADU
1523 E 14th ST, NATIONAL CITY, CALIFORNIA 91950

02-17-2023

STRUCTURAL DETAILS

S4

MiTek

MiTek USA, Inc.
MiTek USA, Inc.
400 Sunrise Avenue, Suite 270
Roseville, CA 95661
Telephone 916-755-3571

Re: 230080
14th st

The truss drawing(s) referenced below have been prepared by MiTek USA, Inc. under my direct supervision based on the parameters provided by Pacific Truss (El Cajon).

Pages or sheets covered by this seal: R74806870 thru R74806873

My license renewal date for the state of California is September 30, 2024.

LICENSED PROFESSIONAL ENGINEER JIAOMING ZHAO C70068 EXP. 9-30-2024 CIVIL STATE OF CALIFORNIA

February 17,2023

Zhao, Xiaoming

IMPORTANT NOTE: The seal on these truss component designs is a certification that the engineer named is licensed in the jurisdiction(s) identified and that the designs comply with ANSI/TPI 1. These designs are based upon parameters shown (e.g., loads, supports, dimensions, shapes and design codes), which were given to MiTek or TRENCO. Any project specific information included is for MiTek's or TRENCO's customers file reference purpose only, and was not taken into account in the preparation of these designs. MiTek or TRENCO has not independently verified the applicability of the design parameters or the designs for any particular building. Before use, the building designer should verify applicability of design parameters and properly incorporate these designs into the overall building design per ANSI/TPI 1, Chapter 2.

Job	Truss	Truss Type	Qty	Ply	14th st
230080	T01	Common Structural Gable	2	1	Job Reference (optional) R74806870

Pacific Truss (El Cajon), El Cajon, CA - 92021. Run: 8.63 S Nov 19 2022 Print: 8.630 S Nov 19 2022 MiTek Industries, Inc. Fri Feb 17 09:48:02 Page: 1
ID:1ydbJvvO_9kPP9zAQdp_skGk4-RlC?PsB?dHq3NSgPqnLlw3uITk0GKWrCDo7J4uJC?f

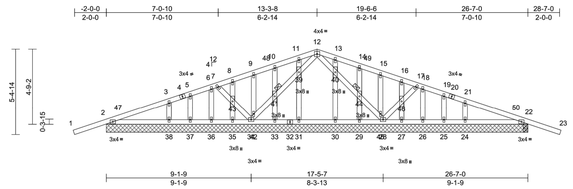

Scale = 1:54.2

Loading	(psf)	Spacing	2-0-0	CSI		DEFL	in	(loc)	l/def	L/d	PLATES	GRIP
TCLL (roof)	20.0	Plate Grip DOL	1.25	TC	0.34	Vert(LL)	0.00	2-13	>999	240	MT20	220/195
TCDL	20.0	Lumber DOL	1.25	BC	0.08	Vert(CT)	-0.01	2-13	>999	180		
BCLL	0.0*	Rep Stress Incr	YES	WB	0.03	Horz(CT)	0.00	22	n/a	n/a		
BCDL	10.0	Code	IBC2018/TPI2014	Matrix-S							Weight: 149 lb	FT = 20%

LUMBER
TOP CHORD 2x4 DF No.2
BOT CHORD 2x4 DF No.2
WEBS 2x4 DF No.2
OTHERS 2x4 DF No.2
BRACING
TOP CHORD Structural wood sheathing directly applied or 6-0-0 oc purlins.
BOT CHORD Rigid ceiling directly applied or 10-0-0 oc bracing.
JOINTS 1 Brace at Jt(s): 41, 44
REACTIONS (size) 2=26-7-0, 22=0-3-8, 24=26-7-0, 25=26-7-0, 26=26-7-0, 27=26-7-0, 28=26-7-0, 29=26-7-0, 30=26-7-0, 31=26-7-0, 33=26-7-0, 34=26-7-0, 35=26-7-0, 36=26-7-0, 37=26-7-0, 38=26-7-0
Max Horiz 2=54 (LC 10)
Max Uplift 22=-11 (LC 7), 25=-15 (LC 7), 37=-16 (LC 6)
Max Grav 2=383 (LC 23), 22=401 (LC 24), 24=273 (LC 1), 25=75 (LC 24), 26=125 (LC 24), 27=122 (LC 24), 28=179 (LC 1), 29=159 (LC 24), 30=157 (LC 1), 31=157 (LC 1), 33=159 (LC 23), 34=125 (LC 1), 35=121 (LC 23), 36=130 (LC 23), 37=52 (LC 23), 38=313 (LC 1)
FORCES (lb) - Maximum Compression/Maximum Tension
TOP CHORD 1-2=0/50, 2-3=-73/57, 3-5=-40/41, 5-6=-17/51, 6-7=-22/46, 7-8=-7/49, 8-9=-15/52, 9-10=-22/60, 10-11=-32/72, 11-12=-38/83, 12-13=-38/83, 13-14=-32/72, 14-15=-22/58, 15-16=-15/47, 16-17=-7/37, 17-18=-22/41, 18-19=-21/45, 19-21=-35/29, 21-22=-66/36, 22-23=0/50
BOT CHORD 2-38=-8/48, 37-38=-8/48, 36-37=-8/48, 35-36=-8/48, 34-35=-8/48, 33-34=-16/73, 31-33=-16/73, 30-31=-16/73, 29-30=-16/73, 28-29=-16/73, 27-28=-8/43, 26-27=-8/43, 25-26=-8/43, 24-25=-8/43, 22-24=-8/43
WEBS 12-40=-56/0, 40-44=-54/0, 44-45=-48/0, 28-45=-133/0, 28-46=-30/28, 17-46=-27/26, 34-42=-133/0, 41-42=-46/0, 39-41=-54/0, 12-39=-56/0, 7-43=-27/25, 34-43=-29/27, 11-39=-114/2, 31-39=-116/0, 13-40=-114/2, 30-40=-116/0, 10-41=-119/13, 33-41=-132/17, 9-42=-102/4, 8-43=-102/0, 35-43=-99/0, 6-36=-97/0, 5-37=-47/19, 3-38=-245/10, 14-44=-119/13, 29-44=-132/17, 15-45=-102/4, 16-46=-102/0, 27-46=-99/0, 18-26=-94/0, 19-25=-62/21, 21-24=-218/11

NOTES
1) Unbalanced roof live loads have been considered for this design.
2) Wind: ASCE 7-16; Vult=110mph (3-second gust) Vasd=87mph; TCDL=12.0psf; BCDL=6.0psf; h=20ft; Ke=1.00; Cat. II; Exp B; Enclosed; MWFRS (envelope) exterior zone and C-C Exterior(2E) -2-0-9 to 0-11-7, Interior (1) 0-11-7 to 10-3-8, Exterior(2R) 10-3-8 to 16-3-8, Interior (1) 16-3-8 to 25-7-9, Exterior(2E) 25-7-9 to 28-7-9 zone; cantilever left and right exposed ; end vertical left and right exposed;C-C for members and forces & MWFRS for reactions shown; Lumber DOL=1.60 plate grip DOL=1.60
3) Truss designed for wind loads in the plane of the truss only. For studs exposed to wind (normal to the face), see Standard Industry Gable End Details as applicable, or consult qualified building designer as per ANSI/TPI 1.
4) All plates are 1.5x4 MT20 unless otherwise indicated.
5) Gable studs spaced at 1-4-0 oc.
6) This truss has been designed for a 10.0 psf bottom chord live load nonconcurrent with any other live loads.
7) * This truss has been designed for a live load of 20.0psf on the bottom chord in all areas where a rectangle 3-06-00 tall by 2-00-00 wide will fit between the bottom chord and any other members.
8) Provide mechanical connection (by others) of truss to bearing plate capable of withstanding 4 lb uplift at joint 2 and 10 lb uplift at joint 8.
9) This truss is designed in accordance with the 2018 International Building Code section 2306.1 and referenced standard ANSI/TPI 1.

LOAD CASE(S) Standard

LICENSED PROFESSIONAL ENGINEER JIAOMING ZHAO C70068 EXP. 9-30-2024 CIVIL STATE OF CALIFORNIA

February 17,2023

MiTek USA, Inc.
400 Sunrise Avenue, Suite 270
Roseville, CA 95661

Job	Truss	Truss Type	Qty	Ply	14th st
230080	T02	Common	9	1	Job Reference (optional) R74806871

Pacific Truss (El Cajon), El Cajon, CA - 92021. Run: 8.63 S Nov 19 2022 Print: 8.630 S Nov 19 2022 MiTek Industries, Inc. Fri Feb 17 09:48:04 Page: 1
ID:1ydbJvvO_9kPP9zAQdp_skGk4-RlC?PsB?dHq3NSgPqnLlw3uITk0GKWrCDo7J4uJC?f

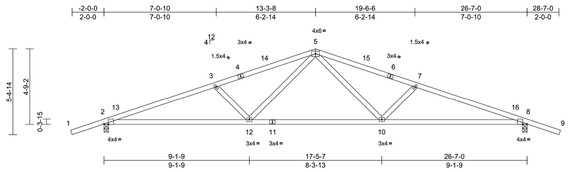

Scale = 1:54
Plate Offsets (X, Y): [2:0-3-6,Edge], [8:0-3-6,Edge]

Loading	(psf)	Spacing	2-0-0	CSI		DEFL	in	(loc)	l/def	L/d	PLATES	GRIP
TCLL (roof)	20.0	Plate Grip DOL	1.25	TC	0.63	Vert(LL)	-0.18	2-12	>999	240	MT20	220/195
TCDL	20.0	Lumber DOL	1.25	BC	0.89	Vert(CT)	-0.45	2-12	>696	180		
BCLL	0.0*	Rep Stress Incr	YES	WB	0.15	Horz(CT)	0.10	8	n/a	n/a		
BCDL	10.0	Code	IBC2018/TPI2014	Matrix-S							Weight: 104 lb	FT = 20%

LUMBER
TOP CHORD 2x4 DF No.2
BOT CHORD 2x4 DF No.2
WEBS 2x4 DF No.2
BRACING
TOP CHORD Structural wood sheathing directly applied or 2-9-3 oc purlins.
BOT CHORD Rigid ceiling directly applied or 10-0-0 oc bracing.
REACTIONS (size) 2=0-3-8, 8=0-3-8
Max Horiz 2=54 (LC 10)
Max Grav 2=1490 (LC 1), 8=1490 (LC 1)
FORCES (lb) - Maximum Compression/Maximum Tension
TOP CHORD 1-2=0/50, 2-3=-3106/0, 3-5=-2905/0, 5-7=-2895/0, 7-8=-3106/0, 8-9=0/50
BOT CHORD 2-12=0/2859, 10-12=0/1915, 8-10=0/2859
5-10=0/832, 7-10=-580/29, 5-12=0/832, 3-12=-580/29

NOTES
1) Unbalanced roof live loads have been considered for this design.
2) Wind: ASCE 7-16; Vult=110mph (3-second gust) Vasd=87mph; TCDL=12.0psf; BCDL=6.0psf; h=20ft; Ke=1.00; Cat. II; Exp B; Enclosed; MWFRS (envelope) exterior zone and C-C Exterior(2E) -2-0-9 to 0-11-7, Interior (1) 0-11-7 to 10-3-8, Exterior(2R) 10-3-8 to 16-3-8, Interior (1) 16-3-8 to 25-7-9, Exterior(2E) 25-7-9 to 28-7-9 zone; cantilever left and right exposed ; end vertical left and right exposed;C-C for members and forces & MWFRS for reactions shown; Lumber DOL=1.60 plate grip DOL=1.60
3) This truss has been designed for a 10.0 psf bottom chord live load nonconcurrent with any other live loads.
4) * This truss has been designed for a live load of 20.0psf on the bottom chord in all areas where a rectangle 3-06-00 tall by 2-00-00 wide will fit between the bottom chord and any other members.
5) This truss is designed in accordance with the 2018 International Building Code section 2306.1 and referenced standard ANSI/TPI 1.

LOAD CASE(S) Standard

LICENSED PROFESSIONAL ENGINEER JIAOMING ZHAO C70068 EXP. 9-30-2024 CIVIL STATE OF CALIFORNIA

February 17,2023

WARNING - Verify design parameters and READ NOTES ON THIS AND INCLUDED MITEK REFERENCE PAGE MII-7473 rev. 5/19/2020 BEFORE USE.
Design valid for use only with MiTek® connectors. This design is based only upon parameters shown, and is for an individual building component, not a truss system. Before use, the building designer must verify the applicability of design parameters and properly incorporate this design into the overall building design. Bracing indicated is to prevent buckling of individual truss web and/or chord members only. Additional temporary and permanent bracing is always required for stability and to prevent collapse with possible personal injury and property damage. For general guidance regarding the fabrication, storage, delivery, erection and bracing of trusses and truss systems, see ***ANSI/TPI1 Quality Criteria, DSB-89 and BCSI Building Component Safety Information*** available from Truss Plate Institute, 2670 Crain Highway, Suite 203 Waldorf, MD 20601

MiTek USA, Inc.
400 Sunrise Avenue, Suite 270
Roseville, CA 95661

Job	Truss	Truss Type	Qty	Ply	14th st
230080	T03	Common Structural Gable	2	1	Job Reference (optional) R74806872

Pacific Truss (El Cajon), El Cajon, CA - 92021. Run: 8.63 S Nov 19 2022 Print: 8.630 S Nov 19 2022 MiTek Industries, Inc. Fri Feb 17 09:48:05 Page: 1
ID:V9BzxfwX_IDb1ZlkZxsLBzkGk3-RlC?PsB?dHq3NSgPqnLlw3uITk0GKWrCDo7J4uJC?f

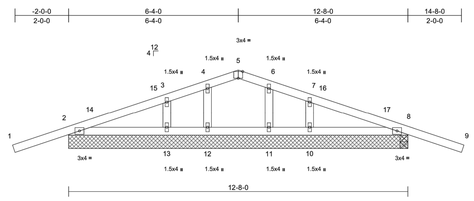

Scale = 1:32.1
Plate Offsets (X, Y): [5:0-2-0,Edge]

Loading	(psf)	Spacing	2-0-0	CSI		DEFL	in	(loc)	l/def	L/d	PLATES	GRIP
TCLL (roof)	20.0	Plate Grip DOL	1.25	TC	0.34	Vert(LL)	0.00	2-13	>999	240	MT20	220/195
TCDL	20.0	Lumber DOL	1.25	BC	0.08	Vert(CT)	-0.01	2-13	>999	180		
BCLL	0.0*	Rep Stress Incr	YES	WB	0.02	Horz(CT)	0.00	8	n/a	n/a		
BCDL	10.0	Code	IBC2018/TPI2014	Matrix-S							Weight: 48 lb	FT = 20%

LUMBER
TOP CHORD 2x4 DF No.2
BOT CHORD 2x4 DF No.2
OTHERS 2x4 DF No.2
BRACING
TOP CHORD Structural wood sheathing directly applied or 6-0-0 oc purlins.
BOT CHORD Rigid ceiling directly applied or 10-0-0 oc bracing.
REACTIONS (size) 2=12-8-0, 8=0-3-8, 10=12-8-0, 11=12-8-0, 12=12-8-0, 13=12-8-0
Max Horiz 2=30 (LC 10)
Max Uplift 2=-4 (LC 6), 8=-10 (LC 7)
Max Grav 2=391 (LC 1), 8=409 (LC 1), 10=223 (LC 24), 11=168 (LC 1), 12=148 (LC 1), 13=259 (LC 23)
FORCES (lb) - Maximum Compression/Maximum Tension
TOP CHORD 1-2=0/50, 2-3=-102/19, 3-4=-73/36, 4-5=-71/55, 5-6=-72/55, 6-7=-70/36, 7-8=-106/20, 8-9=0/50
BOT CHORD 2-13=0/57, 12-13=0/57, 11-12=0/57, 10-11=0/57, 8-10=0/57
WEBS 4-12=-116/28, 6-11=-129/31, 3-13=-207/19, 7-10=-182/14

NOTES
1) Unbalanced roof live loads have been considered for this design.
2) Wind: ASCE 7-16; Vult=110mph (3-second gust) Vasd=87mph; TCDL=12.0psf; BCDL=6.0psf; h=20ft; Ke=1.00; Cat. II; Exp B; Enclosed; MWFRS (envelope) exterior zone and C-C Exterior(2E) -2-0-9 to 0-11-7, Interior (1) 0-11-7 to 3-4-0, Exterior(2R) 3-4-0 to 9-4-0, Interior (1) 9-4-0 to 11-8-9, Exterior(2E) 11-8-9 to 14-8-9 zone; cantilever left and right exposed ; end vertical left and right exposed;C-C for members and forces & MWFRS for reactions shown; Lumber DOL=1.60 plate grip DOL=1.60
3) Truss designed for wind loads in the plane of the truss only. For studs exposed to wind (normal to the face), see Standard Industry Gable End Details as applicable, or consult qualified building designer as per ANSI/TPI 1.
4) All plates are 1.5x4 MT20 unless otherwise indicated.
5) Gable studs spaced at 1-4-0 oc.
6) This truss has been designed for a 10.0 psf bottom chord live load nonconcurrent with any other live loads.
7) * This truss has been designed for a live load of 20.0psf on the bottom chord in all areas where a rectangle 3-06-00 tall by 2-00-00 wide will fit between the bottom chord and any other members.
8) Provide mechanical connection (by others) of truss to bearing plate capable of withstanding 4 lb uplift at joint 2 and 10 lb uplift at joint 8.
9) This truss is designed in accordance with the 2018 International Building Code section 2306.1 and referenced standard ANSI/TPI 1.

LOAD CASE(S) Standard

LICENSED PROFESSIONAL ENGINEER JIAOMING ZHAO C70068 EXP. 9-30-2024 CIVIL STATE OF CALIFORNIA

February 17,2023

WARNING - Verify design parameters and READ NOTES ON THIS AND INCLUDED MITEK REFERENCE PAGE MII-7473 rev. 5/19/2020 BEFORE USE.
Design valid for use only with MiTek® connectors. This design is based only upon parameters shown, and is for an individual building component, not a truss system. Before use, the building designer must verify the applicability of design parameters and properly incorporate this design into the overall building design. Bracing indicated is to prevent buckling of individual truss web and/or chord members only. Additional temporary and permanent bracing is always required for stability and to prevent collapse with possible personal injury and property damage. For general guidance regarding the fabrication, storage, delivery, erection and bracing of trusses and truss systems, see ***ANSI/TPI1 Quality Criteria, DSB-89 and BCSI Building Component Safety Information*** available from Truss Plate Institute, 2670 Crain Highway, Suite 203 Waldorf, MD 20601

MiTek USA, Inc.
400 Sunrise Avenue, Suite 270
Roseville, CA 95661

Job	Truss	Truss Type	Qty	Ply	14th st
230080	T04	Common	5	1	Job Reference (optional) R74806873

Pacific Truss (El Cajon), El Cajon, CA - 92021. Run: 8.63 S Nov 19 2022 Print: 8.630 S Nov 19 2022 MiTek Industries, Inc. Fri Feb 17 09:48:05 Page: 1
ID:V9BzxfwX_IDb1ZlkZxsLBzkGk3-RlC?PsB?dHq3NSgPqnLlw3uITk0GKWrCDo7J4uJC?f

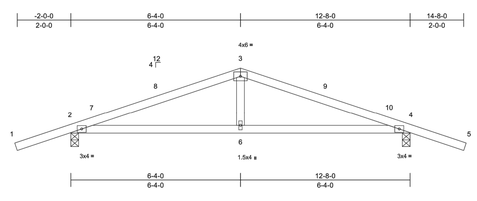

Scale = 1:32.1

Loading	(psf)	Spacing	2-0-0	CSI		DEFL	in	(loc)	l/def	L/d	PLATES	GRIP
TCLL (roof)	20.0	Plate Grip DOL	1.25	TC	0.47	Vert(LL)	-0.03	2-6	>999	240	MT20	220/195
TCDL	20.0	Lumber DOL	1.25	BC	0.39	Vert(CT)	-0.09	2-6	>999	180		
BCLL	0.0*	Rep Stress Incr	YES	WB	0.05	Horz(CT)	0.02	4	n/a	n/a		
BCDL	10.0	Code	IBC2018/TPI2014	Matrix-S							Weight: 44 lb	FT = 20%

LUMBER
TOP CHORD 2x4 DF No.2
BOT CHORD 2x4 DF No.2
WEBS 2x4 DF No.2
BRACING
TOP CHORD Structural wood sheathing directly applied or 5-4-14 oc purlins.
BOT CHORD Rigid ceiling directly applied or 10-0-0 oc bracing.
REACTIONS (size) 2=0-3-8, 4=0-3-8
Max Horiz 2=30 (LC 10)
Max Grav 2=794 (LC 1), 4=794 (LC 1)
FORCES (lb) - Maximum Compression/Maximum Tension
TOP CHORD 1-2=0/50, 2-3=-1052/0, 3-4=-1052/0, 4-5=0/50
BOT CHORD 2-6=0/915, 4-6=0/915
WEBS 3-6=0/295

NOTES
1) Unbalanced roof live loads have been considered for this design.
2) Wind: ASCE 7-16; Vult=110mph (3-second gust) Vasd=87mph; TCDL=12.0psf; BCDL=6.0psf; h=20ft; Ke=1.00; Cat. II; Exp B; Enclosed; MWFRS (envelope) exterior zone and C-C Exterior(2E) -2-0-9 to 0-11-7, Interior (1) 0-11-7 to 3-4-0, Exterior(2R) 3-4-0 to 9-4-0, Interior (1) 9-4-0 to 11-8-9, Exterior(2E) 11-8-9 to 14-8-9 zone; cantilever left and right exposed ; end vertical left and right exposed;C-C for members and forces & MWFRS for reactions shown; Lumber DOL=1.60 plate grip DOL=1.60
3) This truss has been designed for a 10.0 psf bottom chord live load nonconcurrent with any other live loads.
4) * This truss has been designed for a live load of 20.0psf on the bottom chord in all areas where a rectangle 3-06-00 tall by 2-00-00 wide will fit between the bottom chord and any other members.
5) This truss is designed in accordance with the 2018 International Building Code section 2306.1 and referenced standard ANSI/TPI 1.

LOAD CASE(S) Standard

LICENSED PROFESSIONAL ENGINEER JIAOMING ZHAO C70068 EXP. 9-30-2024 CIVIL STATE OF CALIFORNIA

February 17,2023

WARNING - Verify design parameters and READ NOTES ON THIS AND INCLUDED MITEK REFERENCE PAGE MII-7473 rev. 5/19/2020 BEFORE USE.
Design valid for use only with MiTek® connectors. This design is based only upon parameters shown, and is for an individual building component, not a truss system. Before use, the building designer must verify the applicability of design parameters and properly incorporate this design into the overall building design. Bracing indicated is to prevent buckling of individual truss web and/or chord members only. Additional temporary and permanent bracing is always required for stability and to prevent collapse with possible personal injury and property damage. For general guidance regarding the fabrication, storage, delivery, erection and bracing of trusses and truss systems, see ***ANSI/TPI1 Quality Criteria, DSB-89 and BCSI Building Component Safety Information*** available from Truss Plate Institute, 2670 Crain Highway, Suite 203 Waldorf, MD 20601

MiTek USA, Inc.
400 Sunrise Avenue, Suite 270
Roseville, CA 95661

General Safety Notes

Failure to Follow Could Cause Property Damage or Personal Injury

1. Additional stability bracing for truss members, e.g. diagonal or X-bracing, is always required. See BCSI.
2. Truss bracing must be designed by an engineer. For wide trusses spanning between bearings, lateral restraint may require bracing, or alternate means of restraining trusses to prevent rotation should be considered.
3. Never exceed the design loading shown and never stack materials on inadequately braced trusses.
4. Provide copies of this truss design to the building designer, erection supervisor, property owner and all other affected parties.
5. Cut members to bear tightly against each other.
6. Place plates on each face of truss at each joint and embed fully. Knots and splits at joint locations are regulated by ANSI/TPI 1.
7. Design assumes manufacture in accordance with ANSI/TPI 1 unless otherwise noted.
8. Unless otherwise noted, moisture content of lumber shall not exceed 19% at time of fabrication.
9. Unless expressly noted, this design is not applicable for use with fire retardant, preservative treated or green lumber.
10. Camber is a non-structural consideration and is the responsibility of truss fabricator. General practice is to camber for approximately the anticipated live load deflection.
11. Plate type, size, orientation and location dimensions indicated are minimum plating requirements.
12. Lumber used shall be of the species and size, and in all respects, equal to or better than that specified.
13. Top chords must be sheathed or purlins provided at spacing indicated on design.
14. Bottom chords require lateral bracing at 10 ft. spacing, or alternate means of restraining chords against buckling.
15. Connections not shown are the responsibility of others.
16. Do not cut or alter truss member or plate without prior approval of an engineer.
17. Install and load vertically unless indicated otherwise.
18. Use of green or treated lumber may pose unacceptable environmental, health or performance risks. Consult with project engineer before use.
19. Review all portions of this design (front, back, words and pictures) before use. Reviewing pictures alone not sufficient.
20. Design assumes manufacture in accordance with ANSI/TPI 1 Quality Criteria.
21. This design does not take into account any dynamic or shock loads other than those expressly stated.

Numbering System

6-4-8 dimensions shown in ft-in-sixteenths (Drawings not to scale)

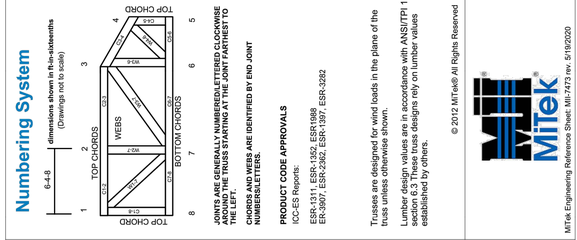

JOINTS ARE GENERALLY NUMBERED/LETTERED CLOCKWISE AROUND THE TRUSS STARTING AT THE JOINT FARTHEST TO THE LEFT.

CHORDS AND WEBS ARE IDENTIFIED BY END JOINT NUMBERS/LETTERS.

PRODUCT CODE APPROVALS
ICC-ES Reports:
ESR-2311; ESR-1539; ESR1988
ER-3907; ESR-2362; ESR-1397; ESR-3282

Trusses are designed for wind loads in the plane of the truss unless otherwise shown.

Lumber design values are in accordance with ANSI/TPI 1 section 6.3 These truss designs rely on lumber values established by others.

MiTek USA, Inc.
400 Sunrise Avenue, Suite 270
Roseville, CA 95661

MiTek Engineering Reference Sheet: MII-7473 rev. 5/19/2020

Symbols

PLATE LOCATION AND ORIENTATION

Center plate on joint unless x, y offsets are indicated.
Dimensions are in ft-in-sixteenths. Apply plates to both sides of truss and fully embed teeth.

For 4 x 2 orientation, locate plates 0 - 1/16" from outside edge of truss.

This symbol indicates the required direction of slots in connector plates.

*** Plate location details available in MiTek 20/20 software or upon request.**

PLATE SIZE

4 x 4

The first dimension is the plate length parallel to the grain of the top chord, the second dimension is the length parallel to slots.

LATERAL BRACING LOCATION

Indicated by symbol shown and/or by text in the bracing section of the output. Use T or I bracing if indicated.

BEARING

Indicates location where bearings (supports) occur. Icons vary but bearing location is indicated by "B", followed by the number where bearings occur. Min size shown is for crushing only.

Industry Standards:
ANSI/TPI1: National Design Specification for Metal Plate Connected Wood Truss Construction.
DSB-89: Design Standard for Bracing.
BCSI: Building Component Safety Information, Guide to Good Practice for Handling, Installing & Bracing of Metal Plate Connected Wood Trusses.

A-E-STUDIO.COM
SMART CONSTRUCTION
JUANNOE73@GMAIL.COM
466 THIRD AVE. STE B
CHULA VISTA, CA 91914
(619) 201-4652

Date February 17, 2023

REVISIONS

REGISTERED PROFESSIONAL ENGINEER JUAN C. PINE No. 72822 Expires 6/30/2024 CIVIL STATE OF CALIFORNIA

ADDITION & NEW ADU
1523 E 14th ST, NATIONAL CITY, CALIFORNIA 91950

02-17-2023

TRUSSES CALCS

T1

CERTIFICATE OF COMPLIANCE **CF1R-PRF-01E**

Project Name: Proposed Detached ADU **Calculation Date/Time:** 2022-04-18T12:08:31-07:00 **(Page 1 of 8)**

Calculation Description: Title 24 Analysis **Input File Name:** 1523 E 14TH Street.ribd19x

GENERAL INFORMATION					
01	Project Name	Proposed Detached ADU			
02	Run Title	Title 24 Analysis			
03	Project Location	1523 E 14TH Street			
04	City	National City	05	Standards Version	2019
06	Zip code	91950	07	Software Version	EnergyPro 8.3
08	Climate Zone	7	09	Front Orientation (deg/ Cardinal)	162
10	Building Type	Single family	11	Number of Dwelling Units	1
12	Project Scope	NewConstruction	13	Number of Bedrooms	2
14	Addition Cond. Floor Area (ft^2)	0	15	Number of Stories	1
16	Existing Cond. Floor Area (ft^2)	n/a	17	Fenestration Average U-factor	0.3
18	Total Cond. Floor Area (ft^2)	498	19	Glazing Percentage (%)	14.46%
20	ADU Bedroom Count	n/a	21	ADU Conditioned Floor Area	n/a
22	Is Natural Gas Available?	Yes			

COMPLIANCE RESULTS	
01	Building Complies with Computer Performance
02	This building incorporates features that require field testing and/or verification by a certified HERS rater under the supervision of a CEC-approved HERS provider.
03	This building incorporates one or more Special Features shown below

CERTIFICATE OF COMPLIANCE **CF1R-PRF-01E**

Project Name: Proposed Detached ADU **Calculation Date/Time:** 2022-04-18T12:08:31-07:00 **(Page 2 of 8)**

Calculation Description: Title 24 Analysis **Input File Name:** 1523 E 14TH Street.ribd19x

ENERGY DESIGN RATING				
	Energy Design Ratings		Compliance Margins	
	Efficiency[1] (EDR)	Total[2] (EDR)	Efficiency[1] (EDR)	Total[2] (EDR)
Standard Design	65.4	28.4		
Proposed Design	63.4	26.4	2	2
RESULT: [3] COMPLIES				

1: Efficiency EDR includes improvements to the building envelope and more efficient equipment
2: Total EDR includes efficiency and demand response measures such as photovoltaic (PV) systems and batteries
3: Building complies when efficiency and total compliance margins are greater than or equal to zero

- Standard Design PV Capacity: 1.79 kWdc
- PV System resized to 1.79 kWdc (a factor of 1.788) to achieve 'Standard Design PV' PV scaling

ENERGY USE SUMMARY				
Energy Use (kTDV/ft^2-yr)	Standard Design	Proposed Design	Compliance Margin	Percent Improvement
Space Heating	0.37	1.01	-0.64	-173
Space Cooling	25.16	28.09	-2.93	-11.6
IAQ Ventilation	6.32	6.32	0	0
Water Heating	45.52	35.51	10.01	22
Self Utilization/Flexibility Credit	n/a	0	0	n/a
Compliance Energy Total	**77.37**	**70.93**	**6.44**	**8.3**

REQUIRED PV SYSTEMS - SIMPLIFIED											
01	02	03	04	05	06	07	08	09	10	11	12
DC System Size (kWdc)	Exception	Module Type	Array Type	Power Electronics	CFI	Azimuth (deg)	Tilt Input	Array Angle (deg)	Tilt: (x in 12)	Inverter Eff. (%)	Annual Solar Access (%)
1.79	NA	Standard	Fixed	none	true	150-270	n/a	n/a	<=7:12	96	98

CERTIFICATE OF COMPLIANCE **CF1R-PRF-01E**

Project Name: Proposed Detached ADU **Calculation Date/Time:** 2022-04-18T12:08:31-07:00 **(Page 3 of 8)**

Calculation Description: Title 24 Analysis **Input File Name:** 1523 E 14TH Street.ribd19x

REQUIRED SPECIAL FEATURES
The following are features that must be installed as condition for meeting the modeled energy performance for this computer analysis.
• Northwest Energy Efficiency Alliance (NEEA) rated heat pump water heater; specific brand/model, or equivalent, must be installed

HERS FEATURE SUMMARY

The following is a summary of the features that must be field-verified by a certified HERS Rater as a condition for meeting the modeled energy performance for this computer analysis. Additional detail is provided in the building tables below. Registered CF2Rs and CF3Rs are required to be completed in the HERS Registry

Building-level Verifications:
- Indoor air quality ventilation
- Kitchen range hood

Cooling System Verifications:
- -- None --

Heating System Verifications:
- Verified heat pump rated heating capacity

HVAC Distribution System Verifications:
- -- None --

Domestic Hot Water System Verifications:
- -- None --

BUILDING - FEATURES INFORMATION						
01	02	03	04	05	06	07
Project Name	Conditioned Floor Area (ft^2)	Number of Dwelling Units	Number of Bedrooms	Number of Zones	Number of Ventilation Cooling Systems	Number of Water Heating Systems
Proposed Detached ADU	498	1	2	1	0	1

ZONE INFORMATION						
01	02	03	04	05	06	07
Zone Name	Zone Type	HVAC System Name	Zone Floor Area (ft^2)	Avg. Ceiling Height	Water Heating System 1	Water Heating System 2
Detached ADU Zone	Conditioned	New Minisplit1	498	8	DHW Sys 1	N/A

CERTIFICATE OF COMPLIANCE **CF1R-PRF-01E**

Project Name: Proposed Detached ADU **Calculation Date/Time:** 2022-04-18T12:08:31-07:00 **(Page 4 of 8)**

Calculation Description: Title 24 Analysis **Input File Name:** 1523 E 14TH Street.ribd19x

OPAQUE SURFACES							
01	02	03	04	05	06	07	08
Name	Zone	Construction	Azimuth	Orientation	Gross Area (ft^2)	Window and Door Area (ft2)	Tilt (deg)
New Front Wall	Detached ADU Zone	R-15 Wall	162	Front	212.7	26	90
New Right Wall	Detached ADU Zone	R-15 Wall	72	Right	150	28	90
New Left Wall	Detached ADU Zone	R-15 Wall	252	Left	150	32	90
New Back Wall	Detached ADU Zone	R-15 Wall	342	Back	162	6	90
New Roof	Detached ADU Zone	R-30 Roof Attic	n/a	n/a	498	n/a	n/a

ATTIC							
01	02	03	04	05	06	07	08
Name	Construction	Type	Roof Rise (x in 12)	Roof Reflectance	Roof Emittance	Radiant Barrier	Cool Roof
Attic Detached ADU Zone	Attic RoofDetached ADU Zone	Ventilated	4	0.1	0.85	No	No

FENESTRATION / GLAZING													
01	02	03	04	05	06	07	08	09	10	11	12	13	14
Name	Type	Surface	Orientation	Azimuth	Width (ft)	Height (ft)	Mult.	Area (ft^2)	U-factor	U-factor Source	SHGC	SHGC Source	Exterior Shading
C	Window	New Front Wall	Front	162			1	6	0.3	NFRC	0.23	NFRC	Bug Screen
A	Window	New Right Wall	Right	72			1	12	0.3	NFRC	0.23	NFRC	Bug Screen
B	Window	New Right Wall	Right	72			1	16	0.3	NFRC	0.23	NFRC	Bug Screen
B	Window	New Left Wall	Left	252			1	16	0.3	NFRC	0.23	NFRC	Bug Screen
B	Window	New Left Wall	Left	252			1	16	0.3	NFRC	0.23	NFRC	Bug Screen
D	Window	New Back Wall	Back	342			1	6	0.3	NFRC	0.23	NFRC	Bug Screen

CERTIFICATE OF COMPLIANCE **CF1R-PRF-01E**

Project Name: Proposed Detached ADU **Calculation Date/Time:** 2022-04-18T12:08:31-07:00 **(Page 5 of 8)**

Calculation Description: Title 24 Analysis **Input File Name:** 1523 E 14TH Street.ribd19x

OPAQUE DOORS			
01	02	03	04
Name	Side of Building	Area (ft^2)	U-factor
1	New Front Wall	20	0.5

SLAB FLOORS							
01	02	03	04	05	06	07	08
Name	Zone	Area (ft^2)	Perimeter (ft)	Edge Insul. R-value and Depth	Edge Insul. R-value and Depth	Carpeted Fraction	Heated
New Slab On Grade	Detached ADU Zone	498	0.1	none	0	80%	No

OPAQUE SURFACE CONSTRUCTIONS							
01	02	03	04	05	06	07	08
Construction Name	Surface Type	Construction Type	Framing	Total Cavity R-value	Interior / Exterior Continuous R-value	U-factor	Assembly Layers
R-15 Wall	Exterior Walls	Wood Framed Wall	2x4 @ 16 in. O. C.	R-15	None / None	0.095	Inside Finish: Gypsum Board Cavity / Frame: R-15 / 2x4 Exterior Finish: 3 Coat Stucco
Attic RoofDetached ADU Zone	Attic Roofs	Wood Framed Ceiling	2x4 @ 24 in. O. C.	R-0	None / None	0.644	Roofing: Light Roof (Asphalt Shingle) Roof Deck: Wood Siding/sheathing/decking Cavity / Frame: no insul. / 2x4
R-30 Roof Attic	Ceilings (below attic)	Wood Framed Ceiling	2x4 @ 24 in. O. C.	R-30	None / None	0.032	Over Ceiling Joists: R-20.9 insul. Cavity / Frame: R-9.1 / 2x4 Inside Finish: Gypsum Board

CERTIFICATE OF COMPLIANCE **CF1R-PRF-01E**

Project Name: Proposed Detached ADU **Calculation Date/Time:** 2022-04-18T12:08:31-07:00 **(Page 6 of 8)**

Calculation Description: Title 24 Analysis **Input File Name:** 1523 E 14TH Street.ribd19x

BUILDING ENVELOPE - HERS VERIFICATION			
01	02	03	04
Quality Insulation Installation (QII)	High R-value Spray Foam Insulation	Building Envelope Air Leakage	CFM50
Not Required	Not Required	Not Required	n/a

WATER HEATING SYSTEMS						
01	02	03	04	05	06	07
Name	System Type	Distribution Type	Water Heater Name (#)	Solar Heating System	Compact Distribution	HERS Verification
DHW Sys 1	Domestic Hot Water (DHW)	Standard Distribution System	DHW Heater 1 (1)	n/a	None	n/a

WATER HEATERS												
01	02	03	04	05	06	07	08	09	10	11	12	
Name	Heating Element Type	Tank Type	# of Units	Tank Vol. (gal)	Energy Factor or Efficiency	Input Rating or Pilot	Tank Insulation R-value (Int/Ext)	Standby Loss or Recovery Eff	1st Hr. Rating or Flow Rate	NEEA Heat Pump Brand or Model	Tank Location or Ambient Condition	
DHW Heater 1	Heat Pump	n/a	1	40	NEEA Rated	<= 12 kW	n/a	n/a	n/a	Rheem\XE40T10HS45U0 (40 gal)	Outside	

WATER HEATING - HERS VERIFICATION							
01	02	03	04	05	06	07	08
Name	Pipe Insulation	Parallel Piping	Compact Distribution	Compact Distribution Type	Recirculation Control	Central DHW Distribution	Shower Drain Water Heat Recovery
DHW Sys 1 - 1/1	Not Required	Not Required	Not Required	None	Not Required	Not Required	Not Required

CERTIFICATE OF COMPLIANCE **CF1R-PRF-01E**

Project Name: Proposed Detached ADU **Calculation Date/Time:** 2022-04-18T12:08:31-07:00 **(Page 7 of 8)**

Calculation Description: Title 24 Analysis **Input File Name:** 1523 E 14TH Street.ribd19x

SPACE CONDITIONING SYSTEMS										
01	02	03	04	05	06	07	08	09	10	11
Name	System Type	Heating Unit Name	Cooling Unit Name	Fan Name	Distribution Name	Required Thermostat Type	Status	Verified Existing Condition	Heating Equipment Count	Cooling Equipment Count
New Minisplit1	Heat pump heating cooling	Heat Pump System 1	Heat Pump System 1	n/a	n/a	Setback	New	NA	1	1

HVAC - HEAT PUMPS											
01	02	03	04	05	06	07	08	09	10	11	
Name	System Type	Number of Units	Heating			Cooling		Zonally Controlled	Compressor Type	HERS Verification	
			HSPF/COP	Cap 47	Cap 17	SEER	EER/CEER				
Heat Pump System 1	Ductless MiniSplit HP	1	8.2	6000	5000	14	11.5	Not Zonal	Single Speed	Heat Pump System 1-hers-htpump	

HVAC HEAT PUMPS - HERS VERIFICATION								
01	02	03	04	05	06	07	08	09
Name	Verified Airflow	Airflow Target	Verified EER	Verified SEER	Verified Refrigerant Charge	Verified HSPF	Verified Heating Cap 47	Verified Heating Cap 17
Heat Pump System 1-hers-htpump	Not Required	0	Not Required	Not Required	No	No	Yes	Yes

IAQ (INDOOR AIR QUALITY) FANS						
01	02	03	04	05	06	07
Dwelling Unit	IAQ CFM	IAQ Watts/CFM	IAQ Fan Type	IAQ Recovery Effectiveness - SRE	IAQ Recovery Effectiveness - ASRE	HERS Verification
SFam IAQVentRpt	37	0.35	Exhaust	n/a	n/a	Yes

CERTIFICATE OF COMPLIANCE **CF1R-PRF-01E**

Project Name: Proposed Detached ADU **Calculation Date/Time:** 2022-04-18T12:08:31-07:00 **(Page 8 of 8)**

Calculation Description: Title 24 Analysis **Input File Name:** 1523 E 14TH Street.ribd19x

DOCUMENTATION AUTHOR'S DECLARATION STATEMENT

I. I certify that this Certificate of Compliance documentation is accurate and complete.

Documentation Author Name: Ricardo Perez	Documentation Author Signature: Ricardo Perez
Company: Estudio75	Signature Date: 2022-04-18 12:12:54
Address: 4275 Executive Square #200	CEA/ HERS Certification Identification (If applicable): R19-19-30062
City/State/Zip: La Jolla, CA 92037	Phone: 619-274-2838

RESPONSIBLE PERSON'S DECLARATION STATEMENT

I certify the following under penalty of perjury, under the laws of the State of California:
1. I am eligible under Division 3 of the Business and Professions Code to accept responsibility for the building design identified on this Certificate of Compliance.
2. I certify that the energy features and performance specifications identified on this Certificate of Compliance conform to the requirements of Title 24, Part 1 and Part 6 of the California Code of Regulations.
3. The building design features or system design features identified on this Certificate of Compliance are consistent with the information provided on other applicable compliance documents, worksheets, calculations, plans and specifications submitted to the enforcement agency for approval with this building permit application.

Responsible Designer Name: Ricardo Perez	Responsible Designer Signature: Ricardo Perez
Company: Estudio75	Date Signed: 2022-04-18 12:12:54
Address: 4275 Executive Square #200	License: R19-19-30062
City/State/Zip: La Jolla, CA 92037	Phone: 619-274-2838

Estudio75
Ricardo H. Perez
4275 Executive Square Suite#200 La Jolla, CA 92037
(619) 274-2838 / t24.e75@gmail.com

Project Address
1523 E 14TH Street
National City, California 91950

T01

RESIDENTIAL MEASURES SUMMARY — RMS-1

Project Name	Building Type		Date
Proposed Detached ADU	☑ Single Family ☐ Multi Family ☐ Addition Alone ☐ Existing+ Addition/Alteration		4/18/2022
Project Address	**California Energy Climate Zone**	**Total Cond. Floor Area**	**Addition**	**# of Units**
1523 E 14TH Street National City	CA Climate Zone 07	498	n/a	1

INSULATION

Construction	Type	Cavity	Area (ft^2)	Special Features	Status
Wall	Wood Framed	R 15	583		New
Door	Opaque Door	- no insulation	20		New
Slab	Unheated Slab-on-Grade	- no insulation	498	Perim = 0'	New
Roof	Wood Framed Attic	R 30	498		New

FENESTRATION

Total Area: 72 | Glazing Percentage: 14.5% | New/Altered Average U-Factor: 0.30

Orientation	Area(ft^2)	U-Fac	SHGC	Overhang	Sidefins	Exterior Shades	Status
Front (S)	6.0	0.300	0.23	none	none	N/A	New
Right (E)	28.0	0.300	0.23	none	none	N/A	New
Left (W)	32.0	0.300	0.23	none	none	N/A	New
Rear (N)	6.0	0.300	0.23	none	none	N/A	New

HVAC SYSTEMS

Qty.	Heating	Min. Eff	Cooling	Min. Eff	Thermostat	Status
1	Split Heat Pump	8.20 HSPF	Split Heat Pump	14.0 SEER	Setback	New

HVAC DISTRIBUTION

Location	Heating	Cooling	Duct Location	Duct R-Value	Status
New Minisplit	Ductless / No Fan	Ductless	n/a	n/a	New

WATER HEATING

Qty.	Type	Gallons	Min. Eff	Distribution	Status
1	Heat Pump	40	3.75	Standard	New

2019 Low-Rise Residential Mandatory Measures Summary

§ 150.0(h)3A:	**Clearances.** Air conditioner and heat pump outdoor condensing units must have a clearance of at least five feet from the outlet of any dryer
§ 150.0(h)3B:	**Liquid Line Drier.** Air conditioners and heat pump systems must be equipped with liquid line filter driers if required, as specified by the manufacturer's instructions.
§ 150.0(j)1:	**Storage Tank Insulation.** Unfired hot water tanks, such as storage tanks and backup storage tanks for solar water-heating systems, must have a minimum of R-12 external insulation or R-16 internal insulation where the internal insulation R-value is indicated on the exterior of the tank.
§ 150.0(j)2A:	**Water Piping, Solar Water-heating System Piping, and Space Conditioning System Line Insulation.** All domestic hot water piping must be insulated as specified in Section 609.11 of the California Plumbing Code. In addition, the following piping conditions must have a minimum insulation wall thickness of one inch or a minimum insulation R-value of 7.7: the first five feet of cold water pipes from the storage tank; all hot water piping with a nominal diameter equal to or greater than 3/4 inch and less than one inch; all hot water piping with a nominal diameter less than 3/4 inch that is: associated with a domestic hot water recirculation system, from the heating source to storage tank or between tanks, buried below grade, and from the heating source to kitchen fixtures.*
§ 150.0(j)3:	**Insulation Protection.** Piping insulation must be protected from damage, including that due to sunlight, moisture, equipment maintenance, and wind as required by Section 120.3(b). Insulation exposed to weather must be water retardant and protected from UV light (no adhesive tapes). Insulation covering chilled water piping and refrigerant suction piping located outside the conditioned space must include, or be protected by, a Class I or Class II vapor retarder. Pipe insulation buried below grade must be installed in a waterproof and non-crushable casing or sleeve.
§ 150.0(n)1:	**Gas or Propane Water Heating Systems.** Systems using gas or propane water heaters to serve individual dwelling units must include all of the following: A dedicated 125 volt, 20 amp electrical receptacle connected to the electric panel with a 120/240 volt 3 conductor, 10 AWG copper branch circuit, within three feet of the water heater without obstruction. Both ends of the unused conductor must be labeled with the word "spare" and be electrically isolated. Have a reserved single pole circuit breaker space in the electrical panel adjacent to the circuit breaker for the branch circuit and labeled with the words "Future 240V Use"; a Category III or IV vent, or a Type B vent with straight pipe between the outside termination and the space where the water heater is installed; a condensate drain that is no more than two inches higher than the base of the water heater, and allows natural draining without pump assistance; and a gas supply line with a capacity of at least 200,000 Btu per hour.
§ 150.0(n)2:	**Recirculating Loops.** Recirculating loops serving multiple dwelling units must meet the requirements of § 110.3(c)5.
§ 150.0(n)3:	**Solar Water-heating Systems.** Solar water-heating systems and collectors must be certified and rated by the Solar Rating and Certification Corporation (SRCC), the International Association of Plumbing and Mechanical Officials, Research and Testing (IAPMO R&T), or by a listing agency that is approved by the Executive Director.
Ducts and Fans Measures:	
§ 110.8(d)3:	**Ducts.** Insulation installed on an existing space-conditioning duct must comply with § 604.0 of the California Mechanical Code (CMC). If a contractor installs the insulation, the contractor must certify to the customer, in writing, that the insulation meets this requirement.
§ 150.0(m)1:	**CMC Compliance.** All air-distribution system ducts and plenums must meet the requirements of the CMC §§ 601.0, 602.0, 603.0, 604.0, 605.0 and ANSI/SMACNA-006-2006 HVAC Duct Construction Standards Metal and Flexible 3rd Edition. Portions of supply-air and return-air ducts and plenums must be insulated to a minimum installed level of R-8.0 or a minimum installed level of R-4.2 when ducts are entirely in conditioned space as confirmed through field verification and diagnostic testing (RA3.1.4.3.8). Portions of the duct system completely exposed and surrounded by directly conditioned space are not required to be insulated. Connections of metal ducts and inner core of flexible ducts must be mechanically fastened. Openings must be sealed with mastic, tape, or other duct-closure system that meets the applicable requirements of UL 181, UL 181A, or UL 181B or aerosol sealant that meets the requirements of UL 723. If mastic or tape is used to seal openings greater than ¼ inch, the combination of mastic and either mesh or tape must be used. Building cavities, support platforms for air handlers, and plenums designed or constructed with materials other than sealed sheet metal, duct board or flexible duct must not be used to convey conditioned air. Building cavities and support platforms may contain ducts. Ducts installed in cavities and support platforms must not be compressed to cause reductions in the cross-sectional area.'
§ 150.0(m)2:	**Factory-Fabricated Duct Systems.** Factory-fabricated duct systems must comply with applicable requirements for duct construction, connections, and closures; joints and seams of duct systems and their components must not be sealed with cloth back rubber adhesive duct tapes unless such tape is used in combination with mastic and draw bands.
§ 150.0(m)3:	**Field-Fabricated Duct Systems.** Field-fabricated duct systems must comply with applicable requirements for: pressure-sensitive tapes, mastics, sealants, and other requirements specified for duct construction.
§ 150.0(m)7:	**Backdraft Damper.** Fan systems that exchange air between the conditioned space and outdoors must have backdraft or automatic dampers.
§ 150.0(m)8:	**Gravity Ventilation Dampers.** Gravity ventilating systems serving conditioned space must have either automatic or readily accessible, manually operated dampers in all openings to the outside, except combustion inlet and outlet air openings and elevator shaft vents.
§ 150.0(m)9:	**Protection of Insulation.** Insulation must be protected from damage, sunlight, moisture, equipment maintenance, and wind. Insulation exposed to weather must be suitable for outdoor service. For example, protected by aluminum, sheet metal, painted canvas, or plastic cover. Cellular foam insulation must be protected as above or painted with a coating that is water retardant and provides shielding from solar radiation.
§ 150.0(m)10:	**Porous Inner Core Flex Duct.** Porous inner core flex ducts must have a non-porous layer between the inner core and outer vapor barrier.
§ 150.0(m)11:	**Duct System Sealing and Leakage Test.** When space conditioning systems use forced air duct systems to supply conditioned air to an occupiable space, the ducts must be sealed and duct leakage tested, as confirmed through field verification and diagnostic testing, in accordance with § 150.0(m)11 and Reference Residential Appendix RA3.
§ 150.0(m)12:	**Air Filtration.** Space conditioning systems with ducts exceeding 10 feet and the supply side of ventilation systems must have MERV 13 or equivalent filters. Filters for space conditioning systems must have a two inch depth or can be one inch if sized per Equation 150.0-A. Pressure drops and labeling must meet the requirements in §150.0(m)12. Filters must be accessible for regular service.*
§ 150.0(m)13:	**Space Conditioning System Airflow Rate and Fan Efficacy.** Space conditioning systems that use ducts to supply cooling must have a hole for the placement of a static pressure probe, or a permanently installed static pressure probe in the supply plenum. Airflow must be ≥ 350 CFM per ton of nominal cooling capacity, and an air-handling unit fan efficacy ≤ 0.45 watts per CFM for gas furnace air handlers and ≤ 0.58 watts per CFM for all others. Small duct high velocity systems must provide an airflow ≥ 250 CFM per ton of nominal cooling capacity, and an air-handling unit fan efficacy ≤ 0.62 watts per CFM. Field verification testing is required in accordance with Reference Residential Appendix RA3.3.*

2019 Low-Rise Residential Mandatory Measures Summary

§ 150.0(k)2G:	**Interior Switches and Controls.** An energy management control system (EMCS) may be used to comply with control requirements if it: provides functionality of the specified control according to § 110.9; meets the Installation Certificate requirements of § 130.4; meets the EMCS requirements of § 130.0(e); and meets all other requirements in § 150.0(k)2.
§ 150.0(k)2H:	**Interior Switches and Controls.** A multiscene programmable controller may be used to comply with dimmer requirements in § 150.0(k) if it provides the functionality of a dimmer according to § 110.9, and complies with all other applicable requirements in § 150.0(k)2.
§ 150.0(k)2I:	**Interior Switches and Controls.** In bathrooms, garages, laundry rooms, and utility rooms, at least one luminaire in each of these spaces must be controlled by an occupant sensor or a vacancy sensor providing automatic-off functionality. If an occupant sensor is installed, it must be initially configured to manual-on operation using the manual control required under Section 150.0(k)2C.
§ 150.0(k)2J:	**Interior Switches and Controls.** Luminaires that are or contain light sources that meet Reference Joint Appendix JA8 requirements for dimming, and that are not controlled by occupancy or vacancy sensors, must have dimming controls.'
§ 150.0(k)2K:	**Interior Switches and Controls.** Under cabinet lighting must be controlled separately from ceiling-installed lighting systems.
§ 150.0(k)3A:	**Residential Outdoor Lighting.** For single-family residential buildings, outdoor lighting permanently mounted to a residential building, or to other buildings on the same lot, must meet the requirement in item § 150.0(k)3Ai (ON and OFF switch) and the requirements in either § 150.0(k)3Aii (photocell and either a motion sensor or automatic time switch control) or § 150.0(k)3Aiii (astronomical time clock), or an EMCS.
§ 150.0(k)3B:	**Residential Outdoor Lighting.** For low-rise residential buildings with four or more dwelling units, outdoor lighting for private patios, entrances, balconies, and porches; and residential parking lots and carports with less than eight vehicles per site must comply with either § 150.0(k)3A or with the applicable requirements in Sections 110.9, 130.0, 130.2, 130.4, 140.7 and 141.0.
§ 150.0(k)3C:	**Residential Outdoor Lighting.** For low-rise residential buildings with four or more dwelling units, any outdoor lighting for residential parking lots or carports with a total of eight or more vehicles per site and any outdoor lighting not regulated by § 150.0(k)3B or § 150.0(k)3D must comply with the applicable requirements in Sections 110.9, 130.0, 130.2, 130.4, 140.7 and 141.0.
§ 150.0(k)4:	**Internally Illuminated address signs.** Internally illuminated address signs must comply with § 140.8; or must consume no more than 5 watts of power as determined according to § 130.0(c).
§ 150.0(k)5:	**Residential Garages for Eight or More Vehicles.** Lighting for residential parking garages for eight or more vehicles must comply with the applicable requirements for nonresidential garages in Sections 110.9, 130.0, 130.1, 130.4, 140.6, and 141.0.
§ 150.0(k)6A:	**Interior Common Areas of Low-rise Multifamily Residential Buildings.** In a low-rise multifamily residential building where the total interior common area in a single building equals 20 percent or less of the floor area, permanently installed lighting for the interior common areas in that building must be comply with Table 150.0-A and be controlled by an occupant sensor.
§ 150.0(k)6B:	**Interior Common Areas of Low-rise Multifamily Residential Buildings.** In a low-rise multifamily residential building where the total interior common area in a single building equals more than 20 percent of the floor area, permanently installed lighting for the interior common areas in that building must: i. Comply with the applicable requirements in Sections 110.9, 130.0, 130.1, 140.6 and 141.0; and ii. Lighting installed in corridors and stairwells must be controlled by occupant sensors that reduce the lighting power in each space by at least 50 percent. The occupant sensors must be capable of turning the light fully on and off from all designed paths of ingress and egress.
Solar Ready Buildings:	
§ 110.10(a)1:	**Single Family Residences.** Single family residences located in subdivisions with 10 or more single family residences and where the application for a tentative subdivision map for the residences has been deemed complete and approved by the enforcement agency, which do not have a photovoltaic system installed, must comply with the requirements of § 110.10(b) through § 110.10(e).
§ 110.10(a)2:	**Low-rise Multifamily Buildings.** Low-rise multi-family buildings that do not have a photovoltaic system installed must comply with the requirements of § 110.10(b) through § 110.10(d).
§ 110.10(b)1:	**Minimum Solar Zone Area.** The solar zone must have a minimum total area as described below. The solar zone must comply with access, pathway, smoke ventilation, and spacing requirements as specified in Title 24, Part 9 or other parts of Title 24 or in any requirements adopted by a local jurisdiction. The solar zone total area must be comprised of areas that have no dimension less than 5 feet and are no less than 80 square feet each for buildings with roof areas less than or equal to 10,000 square feet or no less than 160 square feet each for buildings with roof areas greater than 10,000 square feet. For single family residences, the solar zone must be located on the roof or overhang of the building and have a total area no less than 250 square feet. For low-rise multi-family buildings the solar zone must be located on the roof or overhang of the building, or on the roof or overhang of another structure located within 250 feet of the building, or on covered parking installed with the building project, and have a total area no less than 15 percent of the total roof area of the building excluding any skylight area. The solar zone requirement is applicable to the entire building, including mixed occupancy.'
§ 110.10(b)2:	**Azimuth.** All sections of the solar zone located on steep-sloped roofs must be oriented between 90 degrees and 300 degrees of true north.
§ 110.10(b)3A:	**Shading.** The solar zone must not contain any obstructions, including but not limited to: vents, chimneys, architectural features, and roof mounted equipment.'
§ 110.10(b)3B:	**Shading.** Any obstruction located on the roof or any other part of the building that projects above a solar zone must be located at least twice the distance, measured in the horizontal plane, of the height difference between the highest point of the obstruction and the horizontal projection of the nearest point of the solar zone, measured in the vertical plane.'
§ 110.10(b)4:	**Structural Design Loads on Construction Documents.** For areas of the roof designated as a solar zone, the structural design loads for roof dead load and roof live load must be clearly indicated on the construction documents.
§ 110.10(c):	**Interconnection Pathways.** The construction documents must indicate: a location reserved for inverters and metering equipment and a pathway reserved for routing of conduit from the solar zone to the point of interconnection with the electrical service; and for single family residences and central water-heating systems, a pathway reserved for routing plumbing from the solar zone to the water-heating system.
§ 110.10(d):	**Documentation.** A copy of the construction documents or a comparable document indicating the information from § 110.10(b) through § 110.10(c) must be provided to the occupant.
§ 110.10(e)1:	**Main Electrical Service Panel.** The main electrical service panel must have a minimum busbar rating of 200 amps.
§ 110.10(e)2:	**Main Electrical Service Panel.** The main electrical service panel must have a reserved space to allow for the installation of a double pole circuit breaker for a future solar electric installation. The reserved space must be permanently marked as "For Future Solar Electric".

2019 Low-Rise Residential Mandatory Measures Summary

*NOTE: Low-rise residential buildings subject to the Energy Standards must comply with all applicable mandatory measures, regardless of the compliance approach used. Review the respective section for more information. *Exceptions may apply.*
(01/2020)

Building Envelope Measures:	
§ 110.6(a)1:	**Air Leakage.** Manufactured fenestration, exterior doors, and exterior pet doors must limit air leakage to 0.3 CFM per square foot or less when tested per NFRC-400, ASTM E283 or AAMA/WDMA/CSA 101/I.S.2/A440-2011.'
§ 110.6(a)5:	**Labeling.** Fenestration products and exterior doors must have a label meeting the requirements of § 10-111(a).
§ 110.6(b):	**Field fabricated exterior doors and fenestration** products must use U-factors and solar heat gain coefficient (SHGC) values from Tables 110.6-A, 110.6-B, or JA4.5 for exterior doors. They must be caulked and/or weather-stripped.'
§ 110.7:	**Air Leakage.** All joints, penetrations, and other openings in the building envelope that are potential sources of air leakage must be caulked, gasketed, or weather stripped.
§ 110.8(a):	**Insulation Certification by Manufacturers.** Insulation must be certified by the Department of Consumer Affairs, Bureau of Household Goods and Services (BHGS).
§ 110.8(g):	**Insulation Requirements for Heated Slab Floors.** Heated slab floors must be insulated per the requirements of § 110.8(g).
§ 110.8(i):	**Roofing Products Solar Reflectance and Thermal Emittance.** The thermal emittance and aged solar reflectance values of the roofing material must meet the requirements of § 110.8(i) and be labeled per §10-113 when the installation of a cool roof is specified on the CF1R.
§ 110.8(j):	**Radiant Barrier.** When required, radiant barriers must have an emittance of 0.05 or less and be certified to the Department of Consumer Affairs.
§ 150.0(a):	**Ceiling and Rafter Roof Insulation.** Minimum R-22 insulation in wood-frame ceiling; or the weighted average U-factor must not exceed 0.043. Minimum R-19 or weighted average U-factor of 0.054 or less in a rafter roof alteration. Attic access doors must have permanently attached insulation using adhesive or mechanical fasteners. The attic access must be gasketed to prevent air leakage. Insulation must be installed in direct contact with a continuous roof or ceiling which is sealed to limit infiltration and exfiltration as specified in § 110.7, including but not limited to placing insulation either above or below the roof deck or on top of a drywall ceiling.'
§ 150.0(b):	**Loose-fill Insulation.** Loose fill insulation must meet the manufacturer's required density for the labeled R-value.
§ 150.0(c):	**Wall Insulation.** Minimum R-13 insulation in 2x4 inch wood framing wall or have a U-factor of 0.102 or less, or R-20 in 2x6 inch wood framing or have a U-factor of 0.071 or less. Opaque non-framed assemblies must have an overall assembly U-factor not exceeding 0.102. Masonry walls must meet Tables 150.1-A or B.'
§ 150.0(d):	**Raised-floor Insulation.** Minimum R-19 insulation in raised wood framed floor or 0.037 maximum U-factor.'
§ 150.0(f):	**Slab Edge Insulation.** Slab edge insulation must meet all of the following: have a water absorption rate, for the insulation material alone without facings, no greater than 0.3 percent; have a water vapor permeance no greater than 2.0 perm per inch; be protected from physical damage and UV light deterioration; and, when installed as part of a heated slab floor, meet the requirements of § 110.8(g).
§ 150.0(g)1:	**Vapor Retarder.** In climate zones 1 through 16, the earth floor of unvented crawl space must be covered with a Class I or Class II vapor retarder. This requirement also applies to controlled ventilation crawl space for buildings complying with the exception to § 150.0(d).
§ 150.0(g)2:	**Vapor Retarder.** In climate zones 14 and 16, a Class I or Class II vapor retarder must be installed on the conditioned space side of all insulation in all exterior walls, vented attics, and unvented attics with air-permeable insulation.
§ 150.0(q):	**Fenestration Products.** Fenestration, including skylights, separating conditioned space from unconditioned space or outdoors must have a maximum U-factor of 0.58; or the weighted average U-factor of all fenestration must not exceed 0.58.'
Fireplaces, Decorative Gas Appliances, and Gas Log Measures:	
§ 110.5(e)	**Pilot Light.** Continuously burning pilot lights are not allowed for indoor and outdoor fireplaces.
§ 150.0(e)1:	**Closable Doors.** Masonry or factory-built fireplaces must have a closable metal or glass door covering the entire opening of the firebox.
§ 150.0(e)2:	**Combustion Intake.** Masonry or factory-built fireplaces must have a combustion outside air intake, which is at least six square inches in area and is equipped with a readily accessible, operable, and tight-fitting damper or combustion-air control device.'
§ 150.0(e)3:	**Flue Damper.** Masonry or factory-built fireplaces must have a flue damper with a readily accessible control.'
Space Conditioning, Water Heating, and Plumbing System Measures:	
§ 110.0-§ 110.3:	**Certification.** Heating, ventilation and air conditioning (HVAC) equipment, water heaters, showerheads, faucets, and all other regulated appliances must be certified by the manufacturer to the California Energy Commission.'
§ 110.2(a):	**HVAC Efficiency.** Equipment must meet the applicable efficiency requirements in Table 110.2-A through Table 110.2-K.'
§ 110.2(b):	**Controls for Heat Pumps with Supplementary Electric Resistance Heaters.** Heat pumps with supplementary electric resistance heaters must have controls that prevent supplementary heater operation when the heating load can be met by the heat pump alone; and in which the cut-on temperature for compression heating is higher than the cut-on temperature for supplementary heating, and the cut-off temperature for compression heating is higher than the cut-off temperature for supplementary heating.'
§ 110.2(c):	**Thermostats.** All heating or cooling systems not controlled by a central energy management control system (EMCS) must have a setback thermostat.'
§ 110.3(c)4:	**Water Heating Recirculation Loops Serving Multiple Dwelling Units.** Water heating recirculation loops serving multiple dwelling units must meet the air release valve, backflow prevention, pump priming, pump isolation valve, and recirculation loop connection requirements of § 110.3(c)4.
§ 110.3(c)6:	**Isolation Valves.** Instantaneous water heaters with an input rating greater than 6.8 kBtu per hour (2 kW) must have isolation valves with hose bibbs or other fittings on both cold and hot water lines to allow for flushing the water heater when the valves are closed.
§ 110.5:	**Pilot Lights.** Continuously burning pilot lights are prohibited for natural gas: fan-type central furnaces; household cooking appliances (except appliances without an electrical supply voltage connection with pilot lights that consume less than 150 Btu per hour); and pool and spa heaters.'
§ 150.0(h)1:	**Building Cooling and Heating Loads.** Heating and/or cooling loads are calculated in accordance with the ASHRAE Handbook, Equipment Volume, Applications Volume, and Fundamentals Volume; the SMACNA Residential Comfort System Installation Standards Manual; or the ACCA Manual J using design conditions specified in § 150.0(h)2.

2019 Low-Rise Residential Mandatory Measures Summary

Requirements for Ventilation and Indoor Air Quality:	
§ 150.0(o)1:	**Requirements for Ventilation and Indoor Air Quality**. All dwelling units must meet the requirements of ASHRAE Standard 62.2, Ventilation and Acceptable Indoor Air Quality in Residential Buildings subject to the amendments specified in § 150.0(o)1.
§ 150.0(o)1C:	**Single Family Detached Dwelling Units.** Single family detached dwelling units, and attached dwelling units not sharing ceilings or floors with other dwelling units, occupiable spaces, public garages, or commercial spaces must have mechanical ventilation airflow provided at rates determined by ASHRAE 62.2 Sections 4.1.1 and 4.1.2 and as specified in § 150.0(o)1C.
§ 150.0(o)1E:	**Multifamily Attached Dwelling Units.** Multifamily attached dwelling units must have mechanical ventilation airflow provided at rates in accordance with Equation 150.0-B and must be either a balanced system or continuous supply or continuous exhaust system. If a balanced system is not used, all units in the building must use the same system type and the dwelling-unit envelope leakage must be ≤ 0.3 CFM at 50 Pa (0.2 inch water) per square foot of dwelling unit envelope surface area and verified in accordance with Reference Residential Appendix RA3.8.
§ 150.0(o)1F:	**Multifamily Building Central Ventilation Systems.** Central ventilation systems that serve multiple dwelling units must be balanced to provide ventilation airflow for each dwelling unit served at a rate equal to or greater than the rate specified by Equation 150.0-B. All unit airflows must be within 20 percent of the unit with the lowest airflow rate as it relates to the individual unit's minimum required airflow rate needed for compliance.
§ 150.0(o)1G:	**Kitchen Range Hoods.** Kitchen range hoods must be rated for sound in accordance with Section 7.2 of ASHRAE 62.2.
§ 150.0(o)2:	**Field Verification and Diagnostic Testing.** Dwelling unit ventilation airflow must be verified in accordance with Reference Residential Appendix RA3.7. A kitchen range hood must be verified in accordance with Reference Residential Appendix RA3.7.4.3 to confirm it is rated by HVI to comply with the airflow rates and sound requirements as specified in Section 5 and 7.2 of ASHRAE 62.2.
Pool and Spa Systems and Equipment Measures:	
§ 110.4(a):	**Certification by Manufacturers.** Any pool or spa heating system or equipment must be certified to have all of the following: a thermal efficiency that complies with the Appliance Efficiency Regulations; an on-off switch mounted outside of the heater that allows shutting off the heater without adjusting the thermostat setting; a permanent weatherproof plate or card with operating instructions; and must not use electric resistance heating.'
§ 110.4(b)1:	**Piping.** Any pool or spa heating system or equipment must be installed with at least 36 inches of pipe between the filter and the heater, or dedicated suction and return lines, or built-in or built-up connections to allow for future solar heating.
§ 110.4(b)2:	**Covers.** Outdoor pools or spas that have a heat pump or gas heater must have a cover.
§ 110.4(b)3:	**Directional Inlets and Time Switches for Pools.** Pools must have directional inlets that adequately mix the pool water, and a time switch that will allow all pumps to be set or programmed to run only during off-peak electric demand periods.
§ 110.5:	**Pilot Light.** Natural gas pool and spa heaters must not have a continuously burning pilot light.
§ 150.0(p):	**Pool Systems and Equipment Installation.** Residential pool systems or equipment must meet the specified requirements for pump sizing, flow rate, piping, filters, and valves.'
Lighting Measures:	
§ 110.9:	**Lighting Controls and Components.** All lighting control devices and systems, ballasts, and luminaires must meet the applicable requirements of § 110.9.'
§ 150.0(k)1A:	**Luminaire Efficacy.** All installed luminaires must meet the requirements in Table 150.0-A.
§ 150.0(k)1B:	**Blank Electrical Boxes.** The number of electrical boxes that are more than five feet above the finished floor and do not contain a luminaire or other device must be no greater than the number of bedrooms. These electrical boxes must be served by a dimmer, vacancy sensor control, or fan speed control.
§ 150.0(k)1C:	**Recessed Downlight Luminaires in Ceilings.** Luminaires recessed into ceilings must meet all of the requirements for: insulation contact (IC) labeling; air leakage; sealing; maintenance; and socket and light source as described in § 150.0(k)1C.
§ 150.0(k)1D:	**Electronic Ballasts for Fluorescent Lamps.** Ballasts for fluorescent lamps rated 13 watts or greater must be electronic and must have an output frequency no less than 20 kHz.
§ 150.0(k)1E:	**Night Lights, Step Lights, and Path Lights.** Night lights, step lights and path lights are not required to comply with Table 150.0-A or be controlled by vacancy sensors provided they are rated to consume no more than 5 watts of power and emit no more than 150 lumens.
§ 150.0(k)1F:	**Lighting Integral to Exhaust Fans.** Lighting integral to exhaust fans (except when installed by the manufacturer in kitchen exhaust hoods) must meet the applicable requirements of § 150.0(k).'
§ 150.0(k)1G:	**Screw based luminaires.** Screw based luminaires must contain lamps that comply with Reference Joint Appendix JA8.'
§ 150.0(k)1H:	**Light Sources in Enclosed or Recessed Luminaires.** Lamps and other separable light sources that are not compliant with the JA8 elevated temperature requirements, including marking requirements, must not be installed in enclosed or recessed luminaires.
§ 150.0(k)1I:	**Light Sources in Drawers, Cabinets, and Linen Closets.** Light sources internal to drawers, cabinetry or linen closets are not required to comply with Table 150.0-A or be controlled by vacancy sensors provided that they are rated to consume no more than 5 watts of power, emit no more than 150 lumens, and are equipped with controls that automatically turn the lighting off when the drawer, cabinet or linen closet is closed.
§ 150.0(k)2A:	**Interior Switches and Controls.** All forward phase cut dimmers used with LED light sources must comply with NEMA SSL 7A.
§ 150.0(k)2B:	**Interior Switches and Controls.** Exhaust fans must be controlled separately from lighting systems.'
§ 150.0(k)2C:	**Interior Switches and Controls.** Lighting must have readily accessible wall-mounted controls that allow the lighting to be manually turned ON and OFF.*
§ 150.0(k)2D:	**Interior Switches and Controls.** Controls and equipment must be installed in accordance with manufacturer's instructions.
§ 150.0(k)2E:	**Interior Switches and Controls.** Controls must not bypass a dimmer, occupant sensor, or vacancy sensor function if the control is installed to comply with § 150.0(k).
§ 150.0(k)2F:	**Interior Switches and Controls.** Lighting controls must comply with the applicable requirements of § 110.9.

HVAC SYSTEM HEATING AND COOLING LOADS SUMMARY

Project Name	Date
Proposed Detached ADU	4/18/2022
System Name	**Floor Area**
New Minisplit	498

ENGINEERING CHECKS

Number of Systems	1
Heating System	
Output per System	6,000
Total Output (Btuh)	6,000
Output (Btuh/sqft)	12.0
Cooling System	
Output per System	6,000
Total Output (Btuh)	6,000
Total Output (Tons)	0.5
Total Output (Btuh/sqft)	12.0
Total Output (sqft/Ton)	996.0
Air System	
CFM per System	0
Airflow (cfm)	0
Airflow (cfm/sqft)	0.00
Airflow (cfm/Ton)	0.0
Outside Air (%)	0.0%
Outside Air (cfm/sqft)	0.00

SYSTEM LOAD

	COIL COOLING PEAK			COIL HTG. PEAK	
	CFM	Sensible	Latent	CFM	Sensible
Total Room Loads	218	4,710	344	104	4,159
Return Vented Lighting		0			
Return Air Ducts		0			0
Return Fan		0			0
Ventilation	0	0	0	0	0
Supply Fan		0			0
Supply Air Ducts		0			0
TOTAL SYSTEM LOAD		4,710	344		4,159

HVAC EQUIPMENT SELECTION

Heatpump Minisplit 6K Btus	5,871	0	4,806
Total Adjusted System Output (Adjusted for Peak Design conditions)	5,871	0	4,806
Note: values above given at ARI conditions — TIME OF SYSTEM PEAK	Aug 3 PM		Jan 1 AM

HEATING SYSTEM PSYCHROMETRICS (Airstream Temperatures at Time of Heating Peak)

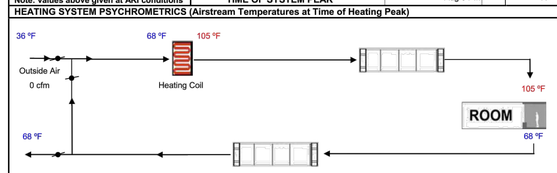

COOLING SYSTEM PSYCHROMETRICS (Airstream Temperatures at Time of Cooling Peak)

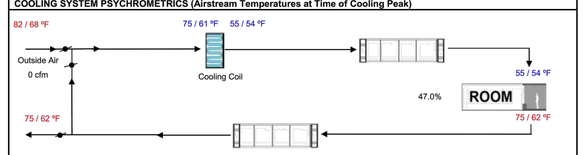

Estudio75
Ricardo H. Perez
4275 Executive Square Suite#200 La Jolla, CA 92037
(619) 274-2838 / t24.e75@gmail.com

Project Address
1523 E 14TH Street
National City, California 91950

T02

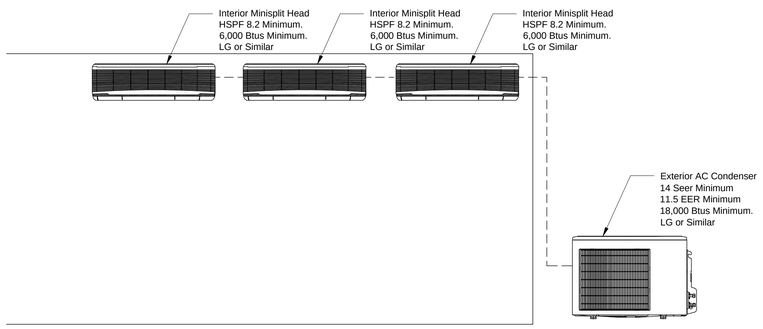

MINISPLIT DETAIL

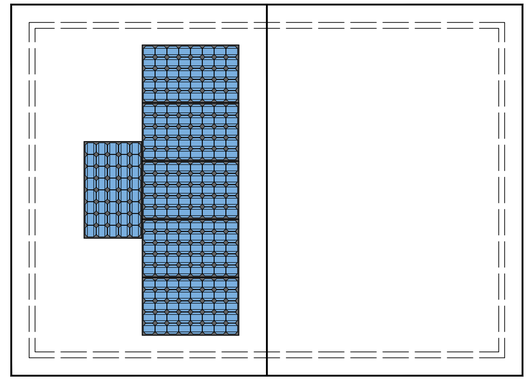

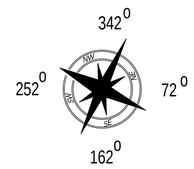

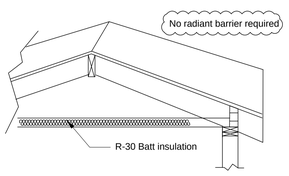

INSULATION AT ROOF ATTIC

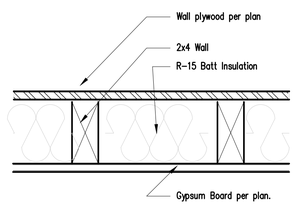

INSULATION AT EXTERIOR WALL

REQUIRED PV SYSTEMS - SIMPLIFIED

01	02	03	04	05	06	07	08	09	10	11	12
DC System Size (kWdc)	**Exception**	**Module Type**	**Array Type**	**Power Electronics**	**CFI**	**Azimuth (deg)**	**Tilt Input**	**Array Angle (deg)**	**Tilt: (x in 12)**	**Inverter Eff. (%)**	**Annual Solar Access (%)**
1.79	NA	Standard	Fixed	none	true	150-270	n/a	n/a	<=7:12	96	98

REQUIRED PV SYSTEMS

Certificate of Product Ratings

AHRI Certified Reference Number : 8552226 Date : 02-07-2020 Model Status : Active

Brand Name : RHEEM

Model Number : RTG-95DVLN-1

Rated as follows in accordance with Department of Energy (DOE) Water Heater test procedures as published in the latest edition of the Code of Federal Regulations, 10 CFR Part 430 and subject to verification of rating accuracy by AHRI-sponsored, independent, third party testing:

Max GPM : 5.0

Uniform Energy Factor : 0.82

The following data is for reference only and is not certified by AHRI

Energy Source : Natural Gas

Heater Type : Instantaneous

Usage Bin : High Usage

Nominal Capacity (gal) : 0

DOE Rated Storage Volume (gal) : 0

Input (MBtu/h) : 199.9

Recovery Efficiency, (%) : 84

Heat Traps : No

GAS TANKLESS WATER HEATER

PANASONIC FV-0511VH1

Specification Submittal Data / Panasonic Ventilation Fan/Heater

Description:
Ventilating fan/heater shall be low noise ceiling mount type rated for continuous run. Fan/heater shall be certified by the Home Ventilating Institute (HVI). Heating elements shall be included. Evaluated by Underwriters Laboratories and conform to both UL and cUL safety standards. Fan/heater is not intended for installation over a tub/shower enclosure.

Motor/Blower:
-Enclosed brushless ECM motor technology rated for continuous run.
-Fan ventilation rates shall be manually adjustable for 50-80-110 CFM.
-Power rating shall be 120 volts and 60 Hz.
-Motor equipped with thermal-cutoff fuse.
-Removable with permanently lubricated plug-in motor.
-Minimum 20 Amp dedicated circuit required.

Housing:
-26 gauge Zinc-Aluminum-Magnesium (ZAM) housing.
-Integrated dual 4" or 6" diameter duct adapter.
-Built-in back draft damper.
-Built-in metal flange provides blocking for penetrations through drywall as an Air Barrier, and assists with the decrease in leakage in the building envelope during blower door testing.
-Building Envelope during blower door testing.
-Suitable for installation in ceilings insulated up to R60.
-Articulating and expandable installation bracket up to 24".

Grille:
-Attractive design using Poly Pro material.
-Attaches directly to housing with torsion springs.
-Circulation grille with built-in diffuser for higher output velocity and directional heat throw.

Heater:
-1600W Positive Temperature Coefficient (PTC) heater for greater safety and reliability.
-Heater is self-limiting. As it approaches designed operating temperature, the electrical consumption automatically decreases, which prevents overheating.

Warranty:
-6 years ECM Motor, 5 years LED, 3 years all other parts.

Architectural Specifications:
Ventilation fan/heater combination shall be ceiling mount, with built-in speed selector. Select from 50/80/110 CFM and no more than <0.3/<0.3/0.7 sone as certified by the Home Ventilating Institute (HVI) at 0.1 static pressure in inches water gauge (w.g.), with 51/82/112 CFM and no more than 0.8/1.0/1.5 sone as certified by HVI at 0.25 w.g., and no less than 53/82/110 CFM at 0.375 w.g. Power Consumption shall be no greater than 4.7/7.7/12 watts at 0.1 w.g., 8.6/13.3/19.0 watts at 0.25 w.g., and 12.3/18.2/26.0 watts at 0.375 w.g. Energy efficiency shall be no less than 10.6/10.4/9.2 CFM/watt at 0.1 w.g. 5.9/6.2/5.9 CFM/watt at 0.25, and 4.3/4.5/4.0 CFM/Watt at 0.375 w.g. Power rating shall be 120v/60Hz. Minimum 20 Amp dedicated circuit required. Duct diameter shall be inclusive of an integrated dual 4" or 6" duct adapter. Also suitable for installation in ceilings insulated up to R60. Fan/heater is not intended for installation over a tub/shower enclosure. Fan/heater can be used to comply with ASHRAE 62.2. Heating element power consumption shall be no less than 1600 watts. Fan/Heater shall also include a circulation grille that incorporates a diffuser for higher output velocity and directional heat throw.

Continuous exhaust system:
IAQ fan shall run continuously and has max 1 sone noise level. Continuous exhaust systems require HERS blower door testing to show no more than 0.3 cfm/sq ft leakage base upon the envelope surface area per section 150.0(o)1E BEES. Please note on plans accordingly

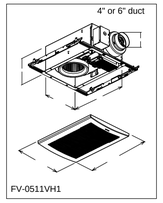

WhisperWarm DC FV-0511VH1		4"			4"			4"		
Characteristics (HVI tested data with 4" Duct)	Static Pressure in inches w.g.	0.1	0.25	0.375	0.1	0.25	0.375	0.1	0.25	0.375
	Air Volume (CFM)	110	112	110	80	82	82	50	51	53
	Noise (sones)	0.7	1.5	-	<0.3	1.0	-	<0.3	0.8	-
	Power Consumption (watts)	12	19.0	26.0	7.7	13.3	18.2	4.7	8.6	12.3
	Energy Efficiency (CFM/Watt)	9.2	5.9	4	10.4	6.2	4.5	10.6	5.9	4.3
	Speed (RPM)	861	1090	1249	736	1008	1173	638	930	1112
	Current (amps)	0.24	0.37	0.49	0.16	0.26	0.35	0.10	0.18	0.25
	MAX. Current (amps)	0.50								
	Power Rating (V/Hz)	120/60								
	Motor Type	ECM								
	ENERGY STAR rated	N/A - No ESTAR category for fan/heater								

-Industry research indicates static pressure in typical installations ranges from 0.20" to 0.375".
---HVI testing and certification based on 4" duct.

ECM Motor Technology:
When the fan senses static pressure, its speed is automatically increased to ensure that the desired CFM is not compromised, which allows the fan to perform as rated.

IAQ FAN (HERS VERIFICATION REQUIRED)

HERS FEATURE SUMMARY

The following is a summary of the features that must be field-verified by a certified HERS Rater as a condition for meeting the modeled energy performance for this computer analysis. Additional detail is provided in the buildng tables below. Registered CF2Rs and CF3Rs are required to be completed in the HERS Registry

Building-level Verifications:
- Indoor air quality ventilation
- Kitchen range hood

Cooling System Verifications:
- -- None --

Heating System Verifications:
- Verified heat pump rated heating capacity

HVAC Distribution System Verifications:
- -- None --

Domestic Hot Water System Verifications:
- -- None --

ENERGY EFFICIENCY HERS VERIFICATION

Estudio75
Ricardo H. Perez
4275 Executive Square Suite#200 La Jolla, CA 92037
(619) 274-2838 / t24.e75@gmail.com

Project Address
1523 E 14TH Street
National City, California 91950

T03

CERTIFICATE OF COMPLIANCE **CF1R-PRF-01E**

Project Name: Addition **Calculation Date/Time:** 2022-10-07T10:33:30-07:00 **(Page 1 of 7)**

Calculation Description: Title 24 Analysis **Input File Name:** 1523 E 14th St Add..ribd19x

GENERAL INFORMATION					
01	Project Name	Addition			
02	Run Title	Title 24 Analysis			
03	Project Location	1523 E 14th Street			
04	City	National City	05	Standards Version	2019
06	Zip code	91950	07	Software Version	EnergyPro 8.3
08	Climate Zone	7	09	Front Orientation (deg/ Cardinal)	162
10	Building Type	Single family	11	Number of Dwelling Units	1
12	Project Scope	AdditionOnly	13	Number of Bedrooms	3
14	Addition Cond. Floor Area (ft^2)	152	15	Number of Stories	1
16	Existing Cond. Floor Area (ft^2)	704	17	Fenestration Average U-factor	0.3
18	Total Cond. Floor Area (ft^2)	856	19	Glazing Percentage (%)	31.58%
20	ADU Bedroom Count	n/a	21	ADU Conditioned Floor Area	n/a
22	Is Natural Gas Available?	Yes			

Addition Alone Project Analysis Parameters					
01	02	03	04	05	06
Existing Area (excl. new addition) (ft2)	Addition Area (excl. existing) (ft2)	Total Area (ft2)	Existing Bedrooms	Addition Bedrooms	Total Bedrooms
704	152	856	2	1	3

COMPLIANCE RESULTS	
01	Building Complies with Computer Performance
02	Building does not require field testing or HERS verification
03	Building does not incorporate Special Features

Registration Number: Registration Date/Time: HERS Provider:

CA Building Energy Efficiency Standards - 2019 Residential Compliance Report Version: 2019.2.000 Schema Version: rev 20200901 Report Generated: 2022-10-07 10:33:46

CERTIFICATE OF COMPLIANCE **CF1R-PRF-01E**

Project Name: Addition **Calculation Date/Time:** 2022-10-07T10:33:30-07:00 **(Page 2 of 7)**

Calculation Description: Title 24 Analysis **Input File Name:** 1523 E 14th St Add..ribd19x

ENERGY USE SUMMARY				
Energy Use (kTDV/ft^2-yr)	Standard Design	Proposed Design	Compliance Margin	Percent Improvement
Space Heating	0	0	0	
Space Cooling	69.39	61.2	8.19	11.8
IAQ Ventilation	0	0	0	
Water Heating	145.7	145.7	0	0
Self Utilization/Flexibility Credit	n/a	0	0	n/a
Compliance Energy Total	**215.09**	**206.9**	**8.19**	**3.8**

REQUIRED SPECIAL FEATURES

The following are features that must be installed as condition for meeting the modeled energy performance for this computer analysis.

- NO SPECIAL FEATURES REQUIRED

HERS FEATURE SUMMARY

The following is a summary of the features that must be field-verified by a certified HERS Rater as a condition for meeting the modeled energy performance for this computer analysis. Additional detail is provided in the building tables below. Registered CF2Rs and CF3Rs are required to be completed in the HERS Registry

Building-level Verifications:
- -- None --

Cooling System Verifications:
- -- None --

Heating System Verifications:
- -- None --

HVAC Distribution System Verifications:
- -- None --

Domestic Hot Water System Verifications:
- -- None --

ZONE INFORMATION

01	02	03	04	05	06	07
Zone Name	Zone Type	HVAC System Name	Zone Floor Area (ft^2)	Avg. Ceiling Height	Water Heating System 1	Water Heating System 2
Addition Zone	Conditioned	Wall Heater1	152	8	DHW Sys 1	N/A

Registration Number: Registration Date/Time: HERS Provider:

CA Building Energy Efficiency Standards - 2019 Residential Compliance Report Version: 2019.2.000 Schema Version: rev 20200901 Report Generated: 2022-10-07 10:33:46

CERTIFICATE OF COMPLIANCE **CF1R-PRF-01E**

Project Name: Addition. **Calculation Date/Time:** 2022-10-07T10:33:30-07:00 **(Page 3 of 7)**

Calculation Description: Title 24 Analysis **Input File Name:** 1523 E 14th St Add..ribd19x

OPAQUE SURFACES

01	02	03	04	05	06	07	08	09	10
Name	Zone	Construction	Azimuth	Orientation	Gross Area (ft^2)	Window and Door Area (ft2)	Tilt (deg)	Wall Exceptions	Status
Left Wall	Addition Zone	R-15 Wall	252	Left	96	16	90	Extension	New
Back Wall	Addition Zone	R-15 Wall	342	Back	101	32	90	none	New
Right Wall	Addition Zone	R-15 Wall	72	Right	96	0	90	none	New
Interior Wall	Addition Zone	R-0 Wall	n/a	n/a	70	0	n/a		New
Roof	Addition Zone	R-30 Roof Attic	n/a	n/a	152	n/a	n/a		New
Raised Floor	Addition Zone	R-19 Floor Crawlspace	n/a	n/a	152	n/a	n/a		New

ATTIC

01	02	03	04	05	06	07	08
Name	Construction	Type	Roof Rise (x in 12)	Roof Reflectance	Roof Emittance	Radiant Barrier	Cool Roof
Attic Addition Zone	Attic RoofAddition Zone	Ventilated	4	0.08	0.75	No	No

FENESTRATION / GLAZING

01	02	03	04	05	06	07	08	09	10	11	12	13	14
Name	Type	Surface	Orientation	Azimuth	Width (ft)	Height (ft)	Mult.	Area (ft^2)	U-factor	U-factor Source	SHGC	SHGC Source	Exterior Shading
Window A	Window	Left Wall	Left	252			1	16	0.3	NFRC	0.23	NFRC	Bug Screen
Window A.	Window	Back Wall	Back	342			1	16	0.3	NFRC	0.23	NFRC	Bug Screen
Window. A	Window	Back Wall	Back	342			1	16	0.3	NFRC	0.23	NFRC	Bug Screen

Registration Number: Registration Date/Time: HERS Provider:

CA Building Energy Efficiency Standards - 2019 Residential Compliance Report Version: 2019.2.000 Schema Version: rev 20200901 Report Generated: 2022-10-07 10:33:46

CERTIFICATE OF COMPLIANCE **CF1R-PRF-01E**

Project Name: Addition **Calculation Date/Time:** 2022-10-07T10:33:30-07:00 **(Page 4 of 7)**

Calculation Description: Title 24 Analysis **Input File Name:** 1523 E 14th St Add..ribd19x

OPAQUE SURFACE CONSTRUCTIONS

01	02	03	04	05	06	07	08
Construction Name	Surface Type	Construction Type	Framing	Total Cavity R-value	Interior / Exterior Continuous R-value	U-factor	Assembly Layers
R-15 Wall	Exterior Walls	Wood Framed Wall	2x4 @ 16 in. O. C.	R-15	None / None	0.095	Inside Finish: Gypsum Board Cavity / Frame: R-15 / 2x4 Exterior Finish: 3 Coat Stucco
R-0 Wall	Interior Walls	Wood Framed Wall	2x4 @ 16 in. O. C.	R-0	None / None	0.277	Inside Finish: Gypsum Board Cavity / Frame: no insul. / 2x4 Other Side Finish: Gypsum Board
Attic RoofAddition Zone	Attic Roofs	Wood Framed Ceiling	2x4 @ 24 in. O. C.	R-0	None / None	0.644	Roofing: Light Roof (Asphalt Shingle) Roof Deck: Wood Siding/sheathing/decking Cavity / Frame: no insul. / 2x4
R-19 Floor Crawlspace	Floors Over Crawlspace	Wood Framed Floor	2x6 @ 16 in. O. C.	R-19	None / None	0.049	Floor Surface: Carpeted Floor Deck: Wood Siding/sheathing/decking Cavity / Frame: R-19 / 2x6
R-30 Roof Attic	Ceilings (below attic)	Wood Framed Ceiling	2x4 @ 24 in. O. C.	R-30	None / None	0.032	Over Ceiling Joists: R-20.9 insul. Cavity / Frame: R-9.1 / 2x4 Inside Finish: Gypsum Board

BUILDING ENVELOPE - HERS VERIFICATION

01	02	03	04
Quality Insulation Installation (QII)	High R-value Spray Foam Insulation	Building Envelope Air Leakage	CFM50
Not Required	Not Required	Not Required	n/a

Registration Number: Registration Date/Time: HERS Provider:

CA Building Energy Efficiency Standards - 2019 Residential Compliance Report Version: 2019.2.000 Schema Version: rev 20200901 Report Generated: 2022-10-07 10:33:46

CERTIFICATE OF COMPLIANCE **CF1R-PRF-01E**

Project Name: Addition **Calculation Date/Time:** 2022-10-07T10:33:30-07:00 **(Page 5 of 7)**

Calculation Description: Title 24 Analysis **Input File Name:** 1523 E 14th St Add..ribd19x

WATER HEATING SYSTEMS

01	02	03	04	05	06	07
Name	System Type	Distribution Type	Water Heater Name (#)	Solar Heating System	Compact Distribution	HERS Verification
DHW Sys 1	Domestic Hot Water (DHW)	Standard Distribution System	DHW Heater 1 (1)	n/a	None	n/a

WATER HEATERS

01	02	03	04	05	06	07	08	09	10	11	12	13	14
Name	Heating Element Type	Tank Type	# of Units	Tank Vol. (gal)	Energy Factor or Efficiency	Input Rating or Pilot	Tank Insulation R-value (Int/Ext)	Standby Loss or Recovery Eff	1st Hr. Rating or Flow Rate	NEEA Heat Pump Brand or Model	Tank Location or Ambient Condition	Status	Verified Existing Condition
DHW Heater 1	Gas	n/a	1	50	0.64-EF	<= 75 kBtu/hr	0	82	n/a	n/a	n/a	Existing	n/a

WATER HEATING - HERS VERIFICATION

01	02	03	04	05	06	07	08
Name	Pipe Insulation	Parallel Piping	Compact Distribution	Compact Distribution Type	Recirculation Control	Central DHW Distribution	Shower Drain Water Heat Recovery
DHW Sys 1 - 1/1	Not Required	Not Required	Not Required	None	Not Required	Not Required	Not Required

SPACE CONDITIONING SYSTEMS

01	02	03	04	05	06	07	08	09	10	11
Name	System Type	Heating Unit Name	Cooling Unit Name	Fan Name	Distribution Name	Required Thermostat Type	Status	Verified Existing Condition	Heating Equipment Count	Cooling Equipment Count
Wall Heater1	Heating and cooling system other	Heating Component 1	Cooling Component 1	HVAC Fan 1	n/a	n/a	Existing	NA	1	1

Registration Number: Registration Date/Time: HERS Provider:

CA Building Energy Efficiency Standards - 2019 Residential Compliance Report Version: 2019.2.000 Schema Version: rev 20200901 Report Generated: 2022-10-07 10:33:46

CERTIFICATE OF COMPLIANCE **CF1R-PRF-01E**

Project Name: Addition **Calculation Date/Time:** 2022-10-07T10:33:30-07:00 **(Page 6 of 7)**

Calculation Description: Title 24 Analysis **Input File Name:** 1523 E 14th St Add..ribd19x

HVAC - HEATING UNIT TYPES

01	02	03	04
Name	System Type	Number of Units	Heating Efficiency
Heating Component 1	Gas wall furnace	1	AFUE-70

HVAC - COOLING UNIT TYPES

01	02	03	04	05	06	07	08
Name	System Type	Number of Units	Efficiency EER/CEER	Efficiency SEER	Zonally Controlled	Multi-speed Compressor	HERS Verification
Cooling Component 1	No Cooling	1	n/a	n/a	Not Zonal	Single Speed	n/a

HVAC - FAN SYSTEMS

01	02	03	04
Name	Type	Fan Power (Watts/CFM)	Name
HVAC Fan 1	HVAC Fan	0.58	n/a

Registration Number: Registration Date/Time: HERS Provider:

CA Building Energy Efficiency Standards - 2019 Residential Compliance Report Version: 2019.2.000 Schema Version: rev 20200901 Report Generated: 2022-10-07 10:33:46

CERTIFICATE OF COMPLIANCE **CF1R-PRF-01E**

Project Name: Addition **Calculation Date/Time:** 2022-10-07T10:33:30-07:00 **(Page 7 of 7)**

Calculation Description: Title 24 Analysis **Input File Name:** 1523 E 14th St Add..ribd19x

DOCUMENTATION AUTHOR'S DECLARATION STATEMENT

I, I certify that this Certificate of Compliance documentation is accurate and complete.

Documentation Author Name: Ricardo Perez	Documentation Author Signature: Ricardo Perez
Company: Estudio 75	Signature Date: 10/7/2022
Address: 4275 Executive Square, Suite 200	CEA/ HERS Certification Identification (If applicable): R19-19-30062
City/State/Zip: La Jolla, CA 92037	Phone: 619 274-2838

RESPONSIBLE PERSON'S DECLARATION STATEMENT

I certify the following under penalty of perjury, under the laws of the State of California:
1. I am eligible under Division 3 of the Business and Professions Code to accept responsibility for the building design identified on this Certificate of Compliance.
2. I certify that the energy features and performance specifications identified on this Certificate of Compliance conform to the requirements of Title 24, Part 1 and Part 6 of the California Code of Regulations.
3. The building design features or system design features identified on this Certificate of Compliance are consistent with the information provided on other applicable compliance documents, worksheets, calculations, plans and specifications submitted to the enforcement agency for approval with this building permit application.

Responsible Designer Name: Leeonel Solis	Responsible Designer Signature: Leonel Solis
Company: Aztec Drafting & Design	Date Signed: 10/7/2022
Address: 9119 Jamacha Rd, Suite 115	License: na
City/State/Zip: Spring Valley, CA 91977	Phone: 619 414-8506

Registration Number: Registration Date/Time: HERS Provider:

CA Building Energy Efficiency Standards - 2019 Residential Compliance Report Version: 2019.2.000 Schema Version: rev 20200901 Report Generated: 2022-10-07 10:33:46

RESIDENTIAL MEASURES SUMMARY **RMS-1**

Project Name	Building Type		Date
Addition	☑ Single Family ☑ Addition Alone ☐ Multi Family ☐ Existing+ Addition/Alteration		10/7/2022
Project Address	California Energy Climate Zone	Total Cond. Floor Area / Addition / # of Units	
1523 E 14th Street National City	CA Climate Zone 07	152 / 152 / 1	

INSULATION

Construction	Type	Cavity (ft^2)	Area (ft^2)	Special Features	Status
Wall	Wood Framed	R 15	80		New
Wall	Wood Framed	R 15	165		New
Demising	Wood Framed	- no insulation	70		Existing
Roof	Wood Framed Attic	R 30	152	Cool Roof	New
Floor	Wood Framed w/Crawl Space	R 19	152		New

FENESTRATION Total Area: 48 Glazing Percentage: 31.6% New/Altered Average U-Factor: 0.30

Orientation	Area(ft^2)	U-Fac	SHGC	Overhang	Sidefins	Exterior Shades	Status
Left (W)	16.0	0.300	0.23	none	none	N/A	New
Rear (N)	32.0	0.300	0.23	none	none	N/A	New

HVAC SYSTEMS

Qty.	Heating	Min. Eff	Cooling	Min. Eff	Thermostat	Status
1	Gravity Wall Furnace	70% AFUE	No Cooling	14.0 SEER	Setback	Existing

HVAC DISTRIBUTION

Location	Heating	Cooling	Duct Location	Duct R-Value	Status
Wall Heater	Ductless / No Fan	Ductless	n/a	n/a	Existing

WATER HEATING

Qty.	Type	Gallons	Min. Eff	Distribution	Status

EnergyPro 8.3 by EnergySoft User Number: 6441 ID: Page 10 of 15

HVAC SYSTEM HEATING AND COOLING LOADS SUMMARY

Project Name	Date
Addition	10/7/2022
System Name	Floor Area
Wall Heater	152

ENGINEERING CHECKS

Number of Systems	1
Heating System	
Output per System	35,000
Output (Btuh)	35,000
Output (Btuh/sqft)	230.3
Cooling System	
Output per System	0
Total Output (Btuh)	0
Total Output (Tons)	0.0
Total Output (Btuh/sqft)	0.0
Total Output (sqft/Ton)	0.0
Air System	
CFM per System	0
Airflow (cfm)	0
Airflow (cfm/sqft)	0.00
Airflow (cfm/Ton)	0.0
Outside Air (%)	0.0%
Outside Air (cfm/sqft)	0.00

Note: values above given at ARI conditions

SYSTEM LOAD

	COIL COOLING PEAK CFM	Sensible	Latent	COIL HTG. PEAK CFM	Sensible
Total Room Loads	94	2,020	105	47	1,858
Total Output (Btuh)		0			
Return Vented Lighting		0			0
Return Air Ducts		0			0
Return Fan		0			0
Ventilation	0	0	0	0	0
Supply Fan		0			0
Supply Air Ducts		0			0
TOTAL SYSTEM LOAD		2,020	105		1,858

HVAC EQUIPMENT SELECTION

Wall Heater	0	0	35,000
Total Adjusted System Output (Adjusted for Peak Design conditions)	0	0	35,000

TIME OF SYSTEM PEAK: Aug 3 PM Jan 1 AM

HEATING SYSTEM PSYCHROMETRICS (Airstream Temperatures at Time of Heating Peak)

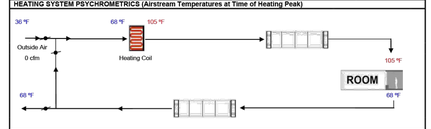

COOLING SYSTEM PSYCHROMETRICS (Airstream Temperatures at Time of Cooling Peak)

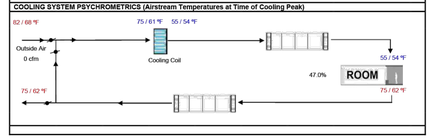

Estudio75
Ricardo H. Perez
4275 Executive Square Suite#200 La Jolla, CA 92037
(619) 274-2838 / t24.e75@gmail.com

Addition
1523 E 14th. St.
National City, California 91950

Project Address

T05

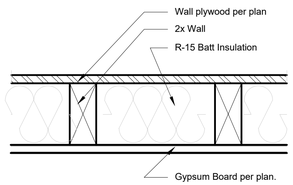

INSULATION AT EXTERIOR WALL

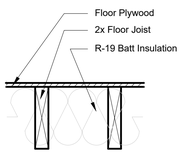

INTERIOR AT RAISED FLOOR

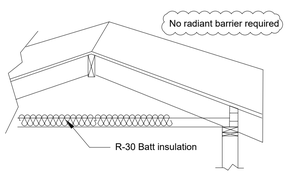

INSULATION AT ROOF ATTIC

PROPERLY COMPLETED AND SIGNED CERTIFICATES OF INSTALLATION (CF2R FORMS) SHALL BE PROVIDED TO THE INSPECTOR IN THE FIELD. FOR PROJECTS REQUIRING HERS VERIFICATION, THE CF2R FORMS SHALL BE REGISTERED WITH A CALIFORNIA-APPROVED HERS PROVIDER DATA REGISTRY.

PROPERLY COMPLETED CERTIFICATES OF VERIFICATION (CF3R FORMS) SHALL BE PROVIDED TO THE INSPECTOR IN THE FIELD FOR ITEMS REQUIRING HERS VERIFICATION. CF3R FORMS SHALL BE REGISTERED WITH A CALIFORNIA-APPROVED HERS PROVIDER DATA REGISTRY.

Windows:	French Door:	Folding Door:	Skylight:
U-Factor=.30	U-Factor=.30	U-Factor=.30	U-Factor=.30
SHGC=.23	SHGC=.23	SHGC=.23	SHGC=.23

ENERGY EFFICIENCY HERS VERIFICATION

Estudio75
Ricardo H. Perez
4275 Executive Square Suite#200 La Jolla, CA 92037
(619) 274-2838 / t24.e75@gmail.com

Addition
1523 E 14th. St.
National City, California 91950

Project Address

T05